Map Lot 008-001 | Account 69 | Location 120 TABOR ROAD | Card 1 Of 1 | 8/23/2023

WHITMORE, JAMES
PO BOX 71
PERHAM ME 04766

B5509P190 B5509P192 B5509P201

Previous Owner
BULLOCK, VIRGINIA Q.
145 DENNIS DRIVE

WILLIAMSBURG VA 23185 4901
Sale Date: 12/04/2015

Inspection Witnessed By:

X Date

No./Date	Description	Date Insp.

Notes:

* House burned. Removed for 2023
* Dwelling assessed at 75% due to delap at time of reval.
-15% off garage for size obs. 1.5 SF and EP/Unfin basement assessed at 80% due to delap.

Washburn

Property Data

Neighborhood **1 Neighborhood One**

Tree Growth Year **0**

1ST MORTGAGE **0**

2ND MORTGAGE **0**

Zone/Land Use **1 Residential**

Secondary Zone

Topography **2 Rolling**

1.Level	4.Below St	7.LevelBog
2.Rolling	5.Low	8.
3.Above St	6.Swampy	9.

Utilities **4 Drilled Well** **6 Septic System**

1.Public	4.Dr Well	7.Cesspool
2.Water	5.Dug Well	8.
3.Sewer	6.Septic	9.None

Street **1 Paved**

1.Paved	4.Proposed	7.
2.Semi Imp	5.R/O/W	8.
3.Gravel	6.	9.None

TG PLAN YEAR **0**

Tif District # **0**

Sale Data

Sale Date **12/04/2015**

Price **126,000**

Sale Type **2 Land & Buildings**

1.Land	4.Mobile	7.C/I L&B
2.L & B	5.Other	8.
3.Building	6.C/I Land	9.

Financing **1 Conventional**

1.Convent	4.Seller	7.
2.FHA/VA	5.Private	8.
3.Assumed	6.Cash	9.Unknown

Validity **1 Arms Length Sale**

1.Valid	4.Split	7.Renovate
2.Related	5.Partial	8.Other
3.Distress	6.Exempt	9.

Verified **5 Public Record**

1.Buyer	4.Agent	7.Family
2.Seller	5.Pub Rec	8.Other
3.Lender	6.MLS	9.

Assessment Record

Year	Land	Buildings	Exempt	Total
2012	30,100	57,400	0	87,500
2013	39,100	57,400	0	96,500
2015	39,100	57,400	0	96,500
2018	39,100	57,400	0	96,500
2019	73,000	51,200	20,000	104,200
2020	73,000	51,000	25,000	99,000
2021	73,000	51,200	25,000	99,200
2022	73,000	53,800	25,000	101,800
2023	81,100	21,100	25,000	77,200

Land Data

Front Foot	Type	Effective Frontage	Effective Depth	Influence Factor	Influence Code
11.Regular Lot				%	
12.Delta Triangle				%	
13.Nabla Triangle				%	
14.Rear Land				%	
15.Class I Road				%	
				%	
				%	
Square Foot		**Square Feet**			
16.Class II Road				%	
17.Municipal Rese				%	
18.Munic Sep Lago				%	
19.Gravel Pit				%	
20.Industrial Bas				%	
				%	
				%	
Fract. Acre		**Acreage/Sites**			
21.Developed Pave	21	1.00	100	%	0
22.Undev Paved (F	28	33.00	100	%	0
23.Developed Grav	31	40.00	100	%	0
Acres				%	
24.Undev Gravel (				%	
25.Comm Base Pave				%	
26.Comm Base Grav				%	
27.Backlot				%	
28.Rear Land				%	
29.Pavement				%	

Total Acreage 74.00

Influence Codes

1.Unimproved
2.Excess Frtg
3.Topography
4.Size/Shape
5.Access
6.Restriction
7.Open Space
8.View/Environ
9.Fract Share
Acres
30.Utility R O W
31.Tillable
32.Pasture
33.Orchard
34.Softwood F&O
35.Mixed Wood F&O
36.Hardwood F&O
37.Softwood TG
38.Mixed Wood TG
39.Hardwood TG
40.Wasteland
41.Open Space
42.Mobile Home Si
43.Condo Site
44.Lot Improvemen
45.Subdivision Lo
46.Heavy Ind Sit

Washburn

Map Lot 008-001 | Account 69 | Location 120 TABOR ROAD | Card 1 Of 1 | 8/23/2023

Building Style		
1.Conv.	5.Garrison	9.Gambrel
2.Ranch	6.Salt Box	10.Other
3.R Ranch	7.Contemp	11.Split
4.Cape	8.Log	12.

Dwelling Units

Other Units

Stories		
1.1	4.1.5	7.
2.2	5.1.75	8.
3.3	6.2.5	9.

Exterior Walls		
1.Wood	5.Stucco	9.T-111
2.Vin/Al	6.Brick	10.Other
3.Compos.	7.Stone	11.
4.Asbestos	8.Concrete	12.

Roof Surface		
1.Asphalt	4.Composit	7.
2.Slate	5.Wood	8.
3.Metal	6.Other	9.

SF Masonry Trim

OPEN-3-CUSTOM

OPEN-4-CUSTOM

Year Built

Year Remodeled

Foundation		
1.Concrete	4.Wood	7.
2.C Block	5.Slab	8.
3.Br/Stone	6.Piers	9.

Basement		
1.1/4 Bmt	4.Full Bmt	7.
2.1/2 Bmt	5.None	8.
3.3/4 Bmt	6.	9.None

Bsmt Gar # Cars

Wet Basement		
1.Dry	4.	7.
2.Damp	5.	8.
3.Wet	6.	9.

SF Bsmt Living

Fin Bsmt Grade

OPEN 5 OPTIONAL

Heat Type **100%**		
1.HWBB	5.FWA	9.No Heat
2.HWCI	6.GravWA	10.
3.H Pump	7.Electric	11.
4.Steam	8.Fl/Wall	12.

Cool Type **0%**		
1.Refrig	4.W&C Air	7.
2.Evapor	5.	8.
3.H Pump	6.	9.None

Kitchen Style		
1.Modern	4.Obsolete	7.
2.Typical	5.	8.
3.Old Type	6.	9.None

Bath(s) Style		
1.Modern	4.Obsolete	7.
2.Typical	5.	8.
3.Old Type	6.	9.None

Rooms

Bedrooms

Full Baths

Half Baths

Addn Fixtures

Fireplaces

TRIO Software
A Division of Harris Computer Systems

Layout		
1.Typical	4.	7.
2.Inadeq	5.	8.
3.Poor	6.	9.

Attic		
1.1/4 Fin	4.Full Fin	7.
2.1/2 Fin	5.Fl/Stair	8.
3.3/4 Fin	6.	9.None

Insulation		
1.Full	4.Minimal	7.
2.Heavy	5.Partial	8.
3.Capped	6.	9.None

Unfinished %

Grade & Factor		
1.E Grade	4.B Grade	7.
2.D Grade	5.A Grade	8.SC Grade
3.C Grade	6.AA Grade	9.Same

SQFT (Footprint)

Condition		
1.Poor	4.Avg	7.V G
2.Fair	5.Avg+	8.Exc
3.Avg-	6.Good	9.Same

Phys. % Good

Funct. % Good

Functional Code		
1.Incomp	4.Delap	7.No Power
2.O-Built	5.Bsmt	8.LongTerm
3.Damage	6.Common	9.None

Econ. % Good

Economic Code		
0.None	3.No Power	7.
1.Location	4.Generate	8.
2.Encroach	9.None	9.

Entrance Code **1 Interior Inspect**		
1.Interior	4.Vacant	7.
2.Refusal	5.Estimate	8.
3.Informed	6.Reviewed	9.

Information Code **1 Owner**		
1.Owner	4.Agent	7.
2.Relative	5.Estimate	8.
3.Tenant	6.Other	9.

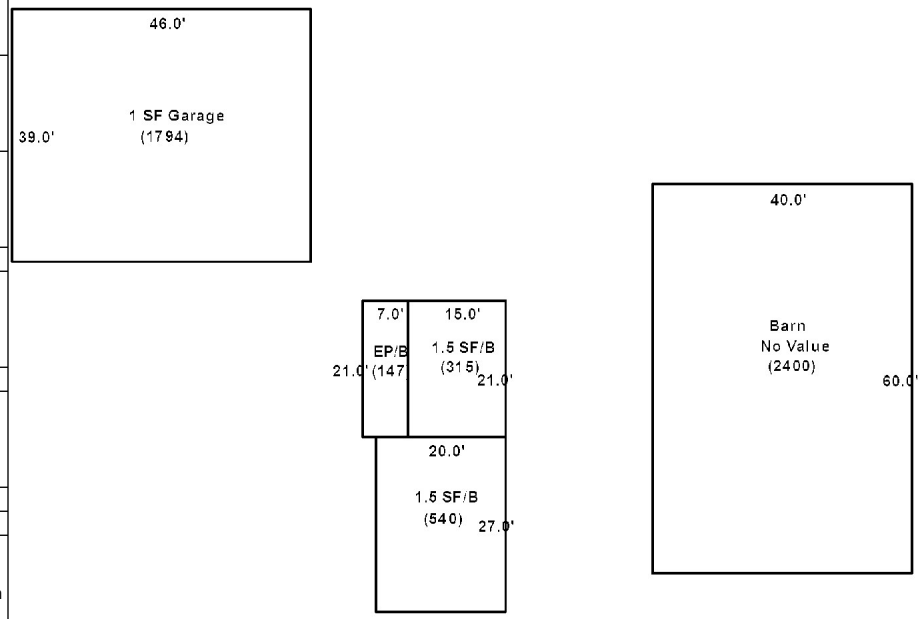

Date Inspected 6/20/2019

Additions, Outbuildings & Improvements

Type	Year	Units	Grade	Cond	Phys.	Funct.	Sound Value
23 Frame Garage	1980	1794	2 110	4	0 %	80 %	
					%	%	
					%	%	
					%	%	
					%	%	
					%	%	
					%	%	
					%	%	
					%	%	
					%	%	

1.One Story Fram
2.Two Story Fram
3.Three Story Fr
4.1 & 1/2 Story
5.1 & 3/4 Story
6.2 & 1/2 Story
21.Open Frame Por
22.Encl Frame Por
23.Frame Garage
24.Frame Shed
25.Frame Bay Wind
26.1SFr Overhang
27.Unfin Basement
28.Unfinished Att
29.Finished Attic

Map Lot 008-002 Account 510 Location WASHBURN ROAD Card 1 Of 1 8/23/2023

McCRUM LAND, LLC
P.O. BOX 660
MARS HILL ME 04758

B5197P40

Previous Owner
Howard, Gertrude J.
Howard, Gary G./ George P.
1750 Washburn Road
Washburn ME 04786
Sale Date: 6/20/2013

Inspection Witnessed By:

X Date

No./Date	Description	Date Insp.

Notes:

Property Data

Neighborhood **1 Neighborhood One**

Tree Growth Year **0**

1ST MORTGAGE **0**

2ND MORTGAGE **0**

Zone/Land Use **2 Commercial**

Secondary Zone

Topography **2 Rolling**

1.Level	4.Below St	7.LevelBog
2.Rolling	5.Low	8.
3.Above St	6.Swampy	9.

Utilities

1.Public	4.Dr Well	7.Cesspool
2.Water	5.Dug Well	8.
3.Sewer	6.Septic	9.None

Street **1 Paved**

1.Paved	4.Proposed	7.
2.Semi Imp	5.R/O/W	8.
3.Gravel	6.	9.None

TG PLAN YEAR **0**

Tif District # **0**

Sale Data

Sale Date **6/20/2013**

Price

Sale Type **1 Land Only**

1.Land	4.Mobile	7.C/I L&B
2.L & B	5.Other	8.
3.Building	6.C/I Land	9.

Financing **4 Seller Financed**

1.Convent	4.Seller	7.
2.FHA/VA	5.Private	8.
3.Assumed	6.Cash	9.Unknown

Validity **1 Arms Length Sale**

1.Valid	4.Split	7.Renovate
2.Related	5.Partial	8.Other
3.Distress	6.Exempt	9.

Verified **5 Public Record**

1.Buyer	4.Agent	7.Family
2.Seller	5.Pub Rec	8.Other
3.Lender	6.MLS	9.

Assessment Record

Year	Land	Buildings	Exempt	Total
2012	1,300	0	0	1,300
2013	1,600	0	0	1,600
2015	1,600	0	0	1,600
2018	1,600	0	0	1,600
2019	2,500	0	0	2,500
2020	2,500	0	0	2,500
2021	2,500	0	0	2,500
2022	2,500	0	0	2,500
2023	2,900	0	0	2,900

Land Data

Front Foot	Type	Effective Frontage	Effective Depth	Influence Factor	Influence Code
11.Regular Lot				%	
12.Delta Triangle				%	
13.Nabla Triangle				%	
14.Rear Land				%	
15.Class I Road				%	
				%	
				%	
Square Foot		**Square Feet**			
16.Class II Road				%	
17.Municipal Rese				%	
18.Munic Sep Lago				%	
19.Gravel Pit				%	
20.Industrial Bas				%	
				%	
				%	
Fract. Acre		**Acreage/Sites**			
21.Developed Pave	28	5.00		100 %	0
22.Undev Paved (F				%	
23.Developed Grav				%	
Acres				%	
24.Undev Gravel (				%	
25.Comm Base Pave				%	
26.Comm Base Grav				%	
27.Backlot				%	
28.Rear Land				%	
29.Pavement				%	

Total Acreage 5.00

Influence Codes

1.Unimproved
2.Excess Frtg
3.Topography
4.Size/Shape
5.Access
6.Restriction
7.Open Space
8.View/Environ
9.Fract Share
Acres
30.Utility R O W
31.Tillable
32.Pasture
33.Orchard
34.Softwood F&O
35.Mixed Wood F&O
36.Hardwood F&O
37.Softwood TG
38.Mixed Wood TG
39.Hardwood TG
40.Wasteland
41.Open Space
42.Mobile Home Si
43.Condo Site
44.Lot Improvemen
45.Subdivision Lo
46.Heavy Ind Sit

Washburn

Washburn

Map Lot 008-002 | Account 510 | Location WASHBURN ROAD | Card 1 Of 1 | 8/23/2023

Building Style **0**		
1.Conv.	5.Garrison	9.Gambrel
2.Ranch	6.Salt Box	10.Other
3.R Ranch	7.Contemp	11.Split
4.Cape	8.Log	12.
Dwelling Units **0**		
Other Units **0**		
Stories **0**		
1.1	4.1.5	7.
2.2	5.1.75	8.
3.3	6.2.5	9.
Exterior Walls **0**		
1.Wood	5.Stucco	9.T-111
2.Vin/Al	6.Brick	10.Other
3.Compos.	7.Stone	11.
4.Asbestos	8.Concrete	12.
Roof Surface **0**		
1.Asphalt	4.Composit	7.
2.Slate	5.Wood	8.
3.Metal	6.Other	9.
SF Masonry Trim **0**		
OPEN-3-CUSTOM **0**		
OPEN-4-CUSTOM **0**		
Year Built **0**		
Year Remodeled **0**		
Foundation **0**		
1.Concrete	4.Wood	7.
2.C Block	5.Slab	8.
3.Br/Stone	6.Piers	9.
Basement **0**		
1.1/4 Bmt	4.Full Bmt	7.
2.1/2 Bmt	5.None	8.
3.3/4 Bmt	6.	9.None
Bsmt Gar # Cars **0**		
Wet Basement **0**		
1.Dry	4.	7.
2.Damp	5.	8.
3.Wet	6.	9.

SF Bsmt Living **0**		
Fin Bsmt Grade **0 0**		
OPEN 5 OPTIONAL **0**		
Heat Type **100%** **0**		
1.HWBB	5.FWA	9.No Heat
2.HWCI	6.GravWA	10.
3.H Pump	7.Electric	11.
4.Steam	8.Fl/Wall	12.
Cool Type **0%** **9 None**		
1.Refrig	4.W&C Air	7.
2.Evapor	5.	8.
3.H Pump	6.	9.None
Kitchen Style **0**		
1.Modern	4.Obsolete	7.
2.Typical	5.	8.
3.Old Type	6.	9.None
Bath(s) Style **0**		
1.Modern	4.Obsolete	7.
2.Typical	5.	8.
3.Old Type	6.	9.None
# Rooms **0**		
# Bedrooms **0**		
# Full Baths **0**		
# Half Baths **0**		
# Addn Fixtures **0**		
# Fireplaces **0**		

TRIO Software
A Division of Harris Computer Systems

Layout **0**		
1.Typical	4.	7.
2.Inadeq	5.	8.
3.Poor	6.	9.
Attic **0**		
1.1/4 Fin	4.Full Fin	7.
2.1/2 Fin	5.Fl/Stair	8.
3.3/4 Fin	6.	9.None
Insulation **0**		
1.Full	4.Minimal	7.
2.Heavy	5.Partial	8.
3.Capped	6.	9.None
Unfinished % **0%**		
Grade & Factor **0 0%**		
1.E Grade	4.B Grade	7.
2.D Grade	5.A Grade	8.SC Grade
3.C Grade	6.AA Grade	9.Same
SQFT (Footprint) **0**		
Condition **0**		
1.Poor	4.Avg	7.V G
2.Fair	5.Avg+	8.Exc
3.Avg-	6.Good	9.Same
Phys. % Good **0%**		
Funct. % Good **100%**		
Functional Code **9 None**		
1.Incomp	4.Delap	7.No Power
2.O-Built	5.Bsmt	8.LongTerm
3.Damage	6.Common	9.None
Econ. % Good **100%**		
Economic Code **None**		
0.None	3.No Power	7.
1.Location	4.Generate	8.
2.Encroach	9.None	9.
Entrance Code **0**		
1.Interior	4.Vacant	7.
2.Refusal	5.Estimate	8.
3.Informed	6.Reviewed	9.
Information Code **0**		
1.Owner	4.Agent	7.
2.Relative	5.Estimate	8.
3.Tenant	6.Other	9.

Date Inspected

Additions, Outbuildings & Improvements

Type	Year	Units	Grade	Cond	Phys.	Funct.	Sound Value
					%	%	
					%	%	
					%	%	
					%	%	
					%	%	
					%	%	
					%	%	
					%	%	
					%	%	
					%	%	

1.One Story Fram
2.Two Story Fram
3.Three Story Fr
4.1 & 1/2 Story
5.1 & 3/4 Story
6.2 & 1/2 Story
21.Open Frame Por
22.Encl Frame Por
23.Frame Garage
24.Frame Shed
25.Frame Bay Wind
26.1SFr Overhang
27.Unfin Basement
28.Unfinished Att
29.Finished Attic

Map Lot 008-003 | Account 655 | Location 156 Tabor Road | Card 1 Of 1 | 8/23/2023

CLOUTIER, MICHELE
247 RANDOLPH DRIVE
BANGOR ME 04401

B4742P1 B4746P314

Previous Owner
Cyr, Jeremy T.
156 Tabor Road

Washburn ME 04786
Sale Date: 8/10/2009

Previous Owner
Ross, Peggy J.
P.O. Box 281

Washburn ME 04786
Sale Date: 11/05/2007

Inspection Witnessed By:

X Date

No./Date	Description	Date Insp.

Notes:
*2-18-2019 -15% on dwelling due to delap. -10% for attached garage.

Washburn

Property Data

Neighborhood	**1 Neighborhood One**
Tree Growth Year	**0**
1ST MORTGAGE	**0**
2ND MORTGAGE	**0**
Zone/Land Use	**1 Residential**
Secondary Zone	
Topography	**2 Rolling**

1.Level	4.Below St	7.LevelBog
2.Rolling	5.Low	8.
3.Above St	6.Swampy	9.

Utilities **4 Drilled Well** **6 Septic System**

1.Public	4.Dr Well	7.Cesspool
2.Water	5.Dug Well	8.
3.Sewer	6.Septic	9.None

Street **1 Paved**

1.Paved	4.Proposed	7.
2.Semi Imp	5.R/O/W	8.
3.Gravel	6.	9.None

TG PLAN YEAR	**0**
Tif District #	**0**

Sale Data

Sale Date	**8/10/2009**
Price	**80,800**
Sale Type	**2 Land & Buildings**

1.Land	4.Mobile	7.C/I L&B
2.L & B	5.Other	8.
3.Building	6.C/I Land	9.

Financing **1 Conventional**

1.Convent	4.Seller	7.
2.FHA/VA	5.Private	8.
3.Assumed	6.Cash	9.Unknown

Validity **1 Arms Length Sale**

1.Valid	4.Split	7.Renovate
2.Related	5.Partial	8.Other
3.Distress	6.Exempt	9.

Verified **5 Public Record**

1.Buyer	4.Agent	7.Family
2.Seller	5.Pub Rec	8.Other
3.Lender	6.MLS	9.

Assessment Record

Year	Land	Buildings	Exempt	Total
2012	5,900	49,300	8,800	46,400
2013	7,600	49,300	8,800	48,100
2015	7,600	49,300	9,000	47,900
2018	7,600	49,300	0	56,900
2019	16,500	48,500	0	65,000
2020	16,500	48,500	0	65,000
2021	16,500	48,500	0	65,000
2022	16,500	50,900	0	67,400
2023	22,000	60,600	0	82,600

Land Data

Front Foot	Type	Effective Frontage	Effective Depth	Influence Factor	Influence Code
11.Regular Lot				%	
12.Delta Triangle				%	
13.Nabla Triangle				%	
14.Rear Land				%	
15.Class I Road				%	
				%	
				%	
Square Foot		**Square Feet**			
16.Class II Road				%	
17.Municipal Rese				%	
18.Munic Sep Lago				%	
19.Gravel Pit				%	
20.Industrial Bas				%	
				%	
				%	
Fract. Acre		**Acreage/Sites**			
21.Developed Pave	21	1.00		100 %	0
22.Undev Paved (F				%	
23.Developed Grav				%	
Acres				%	
24.Undev Gravel (				%	
25.Comm Base Pave				%	
26.Comm Base Grav				%	
27.Backlot				%	
28.Rear Land				%	
29.Pavement				%	

Total Acreage 1.00

Influence Codes

1.Unimproved
2.Excess Frtg
3.Topography
4.Size/Shape
5.Access
6.Restriction
7.Open Space
8.View/Environ
9.Fract Share
Acres
30.Utility R O W
31.Tillable
32.Pasture
33.Orchard
34.Softwood F&O
35.Mixed Wood F&O
36.Hardwood F&O
37.Softwood TG
38.Mixed Wood TG
39.Hardwood TG
40.Wasteland
41.Open Space
42.Mobile Home Si
43.Condo Site
44.Lot Improvemen
45.Subdivision Lo
46.Heavy Ind Sit

Washburn

Map Lot 008-003 | Account 655 | Location 156 Tabor Road | Card 1 Of 1 | 8/23/2023

Building Style	**4 Cape Cod**		
1.Conv.	5.Garrison	9.Gambrel	
2.Ranch	6.Salt Box	10.Other	
3.R Ranch	7.Contemp	11.Split	
4.Cape	8.Log	12.	
Dwelling Units	**1**		
Other Units	**0**		
Stories	**4 One & 1/2 Story**		
1.1	4.1.5	7.	
2.2	5.1.75	8.	
3.3	6.2.5	9.	
Exterior Walls	**1 Wood Siding**		
1.Wood	5.Stucco	9.T-111	
2.Vin/Al	6.Brick	10.Other	
3.Compos.	7.Stone	11.	
4.Asbestos	8.Concrete	12.	
Roof Surface	**1 Asphalt Shingles**		
1.Asphalt	4.Composit	7.	
2.Slate	5.Wood	8.	
3.Metal	6.Other	9.	
SF Masonry Trim	**0**		
OPEN-3-CUSTOM	**0**		
OPEN-4-CUSTOM	**0**		
Year Built	**1880**		
Year Remodeled	**0**		
Foundation	**1 Concrete**		
1.Concrete	4.Wood	7.	
2.C Block	5.Slab	8.	
3.Br/Stone	6.Piers	9.	
Basement	**4 Full Basement**		
1.1/4 Bmt	4.Full Bmt	7.	
2.1/2 Bmt	5.None	8.	
3.3/4 Bmt	6.	9.None	
Bsmt Gar # Cars	**0**		
Wet Basement	**2 Damp Basement**		
1.Dry	4.	7.	
2.Damp	5.	8.	
3.Wet	6.	9.	

SF Bsmt Living	**0**		
Fin Bsmt Grade	**0 0**		
OPEN 5 OPTIONAL	**0**		
Heat Type	**100%**	**1 Hot Water BB**	
1.HWBB	5.FWA	9.No Heat	
2.HWCI	6.GravWA	10.	
3.H Pump	7.Electric	11.	
4.Steam	8.Fl/Wall	12.	
Cool Type	**0%**	**9 None**	
1.Refrig	4.W&C Air	7.	
2.Evapor	5.	8.	
3.H Pump	6.	9.None	
Kitchen Style	**2 Typical**		
1.Modern	4.Obsolete	7.	
2.Typical	5.	8.	
3.Old Type	6.	9.None	
Bath(s) Style	**2 Typical Bath(s)**		
1.Modern	4.Obsolete	7.	
2.Typical	5.	8.	
3.Old Type	6.	9.None	
# Rooms	**6**		
# Bedrooms	**3**		
# Full Baths	**2**		
# Half Baths	**0**		
# Addn Fixtures	**0**		
# Fireplaces	**0**		

TRIO Software
A Division of Harris Computer Systems

Layout	**1 Typical**		
1.Typical	4.	7.	
2.Inadeq	5.	8.	
3.Poor	6.	9.	
Attic	**9 None**		
1.1/4 Fin	4.Full Fin	7.	
2.1/2 Fin	5.Fl/Stair	8.	
3.3/4 Fin	6.	9.None	
Insulation	**4 Minimal**		
1.Full	4.Minimal	7.	
2.Heavy	5.Partial	8.	
3.Capped	6.	9.None	
Unfinished %	**0%**		
Grade & Factor	**2 Fair 115%**		
1.E Grade	4.B Grade	7.	
2.D Grade	5.A Grade	8.SC Grade	
3.C Grade	6.AA Grade	9.Same	
SQFT (Footprint)	**936**		
Condition	**4 Average**		
1.Poor	4.Avg	7.V G	
2.Fair	5.Avg+	8.Exc	
3.Avg-	6.Good	9.Same	
Phys. % Good	**0%**		
Funct. % Good	**85%**		
Functional Code	**4 Delapidation**		
1.Incomp	4.Delap	7.No Power	
2.O-Built	5.Bsmt	8.LongTerm	
3.Damage	6.Common	9.None	
Econ. % Good	**100%**		
Economic Code	**None**		
0.None	3.No Power	7.	
1.Location	4.Generate	8.	
2.Encroach	9.None	9.	
Entrance Code	**1 Interior Inspect**		
1.Interior	4.Vacant	7.	
2.Refusal	5.Estimate	8.	
3.Informed	6.Reviewed	9.	
Information Code	**1 Owner**		
1.Owner	4.Agent	7.	
2.Relative	5.Estimate	8.	
3.Tenant	6.Other	9.	

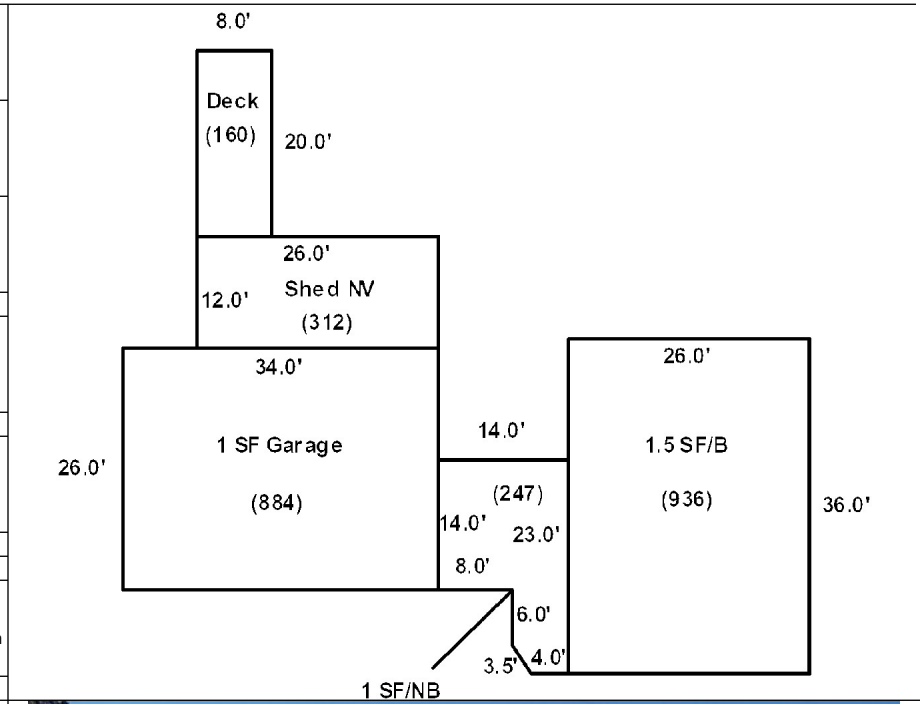

Date Inspected 10/18/2018

Additions, Outbuildings & Improvements

Type	Year	Units	Grade	Cond	Phys.	Funct.	Sound Value
1 One Story Frame	1900	247	2 110	3	0 %	100 %	
23 Frame Garage	1920	884	2 110	3	0 %	90 %	
68 Wood Deck	1970	160	2 95	2	0 %	100 %	
					%	%	
					%	%	
					%	%	
					%	%	
					%	%	
					%	%	
					%	%	

1.One Story Fram
2.Two Story Fram
3.Three Story Fr
4.1 & 1/2 Story
5.1 & 3/4 Story
6.2 & 1/2 Story
21.Open Frame Por
22.Encl Frame Por
23.Frame Garage
24.Frame Shed
25.Frame Bay Wind
26.1SFr Overhang
27.Unfin Basement
28.Unfinished Att
29.Finished Attic

Map Lot 008-004 Account 509 Location TABOR ROAD Card 1 Of 1 8/23/2023

McCRUM LAND, LLC
P.O. BOX 660
MARS HILL ME 04758

B5197P40

Previous Owner
Howard, Gertrude J.
Howard, Gary G. & George P.
1750 Washburn Road
Washburn ME 04786
Sale Date: 6/20/2013

Inspection Witnessed By:

X Date

No./Date	Description	Date Insp.

Notes:
*1-3-2019 All buidlings assessed at no value at time of reval.

Property Data

Neighborhood **1 Neighborhood One**

Tree Growth Year **0**

1ST MORTGAGE **0**

2ND MORTGAGE **0**

Zone/Land Use **1 Residential**

Secondary Zone

Topography **2 Rolling**

1.Level 4.Below St 7.LevelBog
2.Rolling 5.Low 8.
3.Above St 6.Swampy 9.

Utilities **4 Drilled Well** **6 Septic System**

1.Public 4.Dr Well 7.Cesspool
2.Water 5.Dug Well 8.
3.Sewer 6.Septic 9.None

Street **1 Paved**

1.Paved 4.Proposed 7.
2.Semi Imp 5.R/O/W 8.
3.Gravel 6. 9.None

TG PLAN YEAR **0**

Tif District # **0**

Sale Data

Sale Date **6/20/2013**

Price

Sale Type **2 Land & Buildings**

1.Land 4.Mobile 7.C/I L&B
2.L & B 5.Other 8.
3.Building 6.C/I Land 9.

Financing **4 Seller Financed**

1.Convent 4.Seller 7.
2.FHA/VA 5.Private 8.
3.Assumed 6.Cash 9.Unknown

Validity **1 Arms Length Sale**

1.Valid 4.Split 7.Renovate
2.Related 5.Partial 8.Other
3.Distress 6.Exempt 9.

Verified **5 Public Record**

1.Buyer 4.Agent 7.Family
2.Seller 5.Pub Rec 8.Other
3.Lender 6.MLS 9.

Assessment Record

Year	Land	Buildings	Exempt	Total
2012	64,700	1,100	0	65,800
2013	84,100	1,100	0	85,200
2015	84,100	1,100	0	85,200
2018	84,100	1,100	0	85,200
2019	164,100	0	0	164,100
2020	164,100	0	0	164,100
2021	164,100	0	0	164,100
2022	164,100	0	0	164,100
2023	171,400	0	0	171,400

Land Data

Front Foot	Type	Effective Frontage	Effective Depth	Influence Factor	Influence Code
11.Regular Lot				%	
12.Delta Triangle				%	
13.Nabla Triangle				%	
14.Rear Land				%	
15.Class I Road				%	
				%	
				%	
Square Foot		**Square Feet**			
16.Class II Road				%	
17.Municipal Rese				%	
18.Munic Sep Lago				%	
19.Gravel Pit				%	
20.Industrial Bas				%	
				%	
				%	
Fract. Acre		**Acreage/Sites**			
21.Developed Pave	21	1.00	100	%	0
22.Undev Paved (F	28	22.80	100	%	0
23.Developed Grav	31	136.20	100	%	0
Acres				%	
24.Undev Gravel (				%	
25.Comm Base Pave				%	
26.Comm Base Grav				%	
27.Backlot				%	
28.Rear Land				%	
29.Pavement				%	

Total Acreage 160.00

Influence Codes

1.Unimproved
2.Excess Frtg
3.Topography
4.Size/Shape
5.Access
6.Restriction
7.Open Space
8.View/Environ
9.Fract Share
Acres
30.Utility R O W
31.Tillable
32.Pasture
33.Orchard
34.Softwood F&O
35.Mixed Wood F&O
36.Hardwood F&O
37.Softwood TG
38.Mixed Wood TG
39.Hardwood TG
40.Wasteland
41.Open Space
42.Mobile Home Si
43.Condo Site
44.Lot Improvemen
45.Subdivision Lo
46.Heavy Ind Sit

Washburn

Washburn

Map Lot 008-004 | Account 509 | Location TABOR ROAD | Card 1 Of 1 | 8/23/2023

Building Style **0**		
1.Conv.	5.Garrison	9.Gambrel
2.Ranch	6.Salt Box	10.Other
3.R Ranch	7.Contemp	11.Split
4.Cape	8.Log	12.
Dwelling Units **0**		
Other Units **0**		
Stories **0**		
1.1	4.1.5	7.
2.2	5.1.75	8.
3.3	6.2.5	9.
Exterior Walls **0**		
1.Wood	5.Stucco	9.T-111
2.Vin/Al	6.Brick	10.Other
3.Compos.	7.Stone	11.
4.Asbestos	8.Concrete	12.
Roof Surface **0**		
1.Asphalt	4.Composit	7.
2.Slate	5.Wood	8.
3.Metal	6.Other	9.
SF Masonry Trim **0**		
OPEN-3-CUSTOM **0**		
OPEN-4-CUSTOM **0**		
Year Built **0**		
Year Remodeled **0**		
Foundation **0**		
1.Concrete	4.Wood	7.
2.C Block	5.Slab	8.
3.Br/Stone	6.Piers	9.
Basement **0**		
1.1/4 Bmt	4.Full Bmt	7.
2.1/2 Bmt	5.None	8.
3.3/4 Bmt	6.	9.None
Bsmt Gar # Cars **0**		
Wet Basement **0**		
1.Dry	4.	7.
2.Damp	5.	8.
3.Wet	6.	9.

SF Bsmt Living **0**		
Fin Bsmt Grade **0 0**		
OPEN 5 OPTIONAL **0**		
Heat Type **100%** **0**		
1.HWBB	5.FWA	9.No Heat
2.HWCI	6.GravWA	10.
3.H Pump	7.Electric	11.
4.Steam	8.Fl/Wall	12.
Cool Type **0%** **9 None**		
1.Refrig	4.W&C Air	7.
2.Evapor	5.	8.
3.H Pump	6.	9.None
Kitchen Style **0**		
1.Modern	4.Obsolete	7.
2.Typical	5.	8.
3.Old Type	6.	9.None
Bath(s) Style **0**		
1.Modern	4.Obsolete	7.
2.Typical	5.	8.
3.Old Type	6.	9.None
# Rooms **0**		
# Bedrooms **0**		
# Full Baths **0**		
# Half Baths **0**		
# Addn Fixtures **0**		
# Fireplaces **0**		

TRIO Software
A Division of Harris Computer Systems

Layout **0**		
1.Typical	4.	7.
2.Inadeq	5.	8.
3.Poor	6.	9.
Attic **0**		
1.1/4 Fin	4.Full Fin	7.
2.1/2 Fin	5.Fl/Stair	8.
3.3/4 Fin	6.	9.None
Insulation **0**		
1.Full	4.Minimal	7.
2.Heavy	5.Partial	8.
3.Capped	6.	9.None
Unfinished % **0%**		
Grade & Factor **0 0%**		
1.E Grade	4.B Grade	7.
2.D Grade	5.A Grade	8.SC Grade
3.C Grade	6.AA Grade	9.Same
SQFT (Footprint) **0**		
Condition **0**		
1.Poor	4.Avg	7.V G
2.Fair	5.Avg+	8.Exc
3.Avg-	6.Good	9.Same
Phys. % Good **0%**		
Funct. % Good **100%**		
Functional Code **9 None**		
1.Incomp	4.Delap	7.No Power
2.O-Built	5.Bsmt	8.LongTerm
3.Damage	6.Common	9.None
Econ. % Good **100%**		
Economic Code **None**		
0.None	3.No Power	7.
1.Location	4.Generate	8.
2.Encroach	9.None	9.
Entrance Code **0**		
1.Interior	4.Vacant	7.
2.Refusal	5.Estimate	8.
3.Informed	6.Reviewed	9.
Information Code **0**		
1.Owner	4.Agent	7.
2.Relative	5.Estimate	8.
3.Tenant	6.Other	9.

Date Inspected

Additions, Outbuildings & Improvements

Type	Year	Units	Grade	Cond	Phys.	Funct.	Sound Value
					%	%	
					%	%	
					%	%	
					%	%	
					%	%	
					%	%	
					%	%	
					%	%	
					%	%	
					%	%	

1.One Story Fram
2.Two Story Fram
3.Three Story Fr
4.1 & 1/2 Story
5.1 & 3/4 Story
6.2 & 1/2 Story
21.Open Frame Por
22.Encl Frame Por
23.Frame Garage
24.Frame Shed
25.Frame Bay Wind
26.1SFr Overhang
27.Unfin Basement
28.Unfinished Att
29.Finished Attic

Map Lot 008-005 Account 515 Location TABOR ROAD Card 1 Of 1 8/23/2023

McCRUM LAND, LLC
P.O. BOX 660
MARS HILL ME 04758

B5197P40

Previous Owner
Howard, Gertrude J.
Howard, Gary G. & George P.
1750 Washburn Road
Washburn ME 04786
Sale Date: 6/20/2013

Inspection Witnessed By:

X Date

No./Date	Description	Date Insp.

Notes:

Property Data

Neighborhood **1 Neighborhood One**

Tree Growth Year **0**

1ST MORTGAGE **0**

2ND MORTGAGE **0**

Zone/Land Use **2 Commercial**

Secondary Zone

Topography **2 Rolling**

1.Level	4.Below St	7.LevelBog
2.Rolling	5.Low	8.
3.Above St	6.Swampy	9.

Utilities

1.Public	4.Dr Well	7.Cesspool
2.Water	5.Dug Well	8.
3.Sewer	6.Septic	9.None

Street **1 Paved**

1.Paved	4.Proposed	7.
2.Semi Imp	5.R/O/W	8.
3.Gravel	6.	9.None

TG PLAN YEAR **0**

Tif District # **0**

Sale Data

Sale Date **6/20/2013**

Price

Sale Type **1 Land Only**

1.Land	4.Mobile	7.C/I L&B
2.L & B	5.Other	8.
3.Building	6.C/I Land	9.

Financing **4 Seller Financed**

1.Convent	4.Seller	7.
2.FHA/VA	5.Private	8.
3.Assumed	6.Cash	9.Unknown

Validity **1 Arms Length Sale**

1.Valid	4.Split	7.Renovate
2.Related	5.Partial	8.Other
3.Distress	6.Exempt	9.

Verified **5 Public Record**

1.Buyer	4.Agent	7.Family
2.Seller	5.Pub Rec	8.Other
3.Lender	6.MLS	9.

Assessment Record

Year	Land	Buildings	Exempt	Total
2012	4,000	0	0	4,000
2013	5,200	0	0	5,200
2015	5,200	0	0	5,200
2018	5,200	0	0	5,200
2019	8,000	0	0	8,000
2020	8,000	0	0	8,000
2021	8,000	0	0	8,000
2022	8,000	0	0	8,000
2023	9,300	0	0	9,300

Land Data

Front Foot	Type	Effective Frontage	Effective Depth	Influence Factor	Influence Code
11.Regular Lot				%	
12.Delta Triangle				%	
13.Nabla Triangle				%	
14.Rear Land				%	
15.Class I Road				%	
				%	
				%	
Square Foot		**Square Feet**			
16.Class II Road				%	
17.Municipal Rese				%	
18.Munic Sep Lago				%	
19.Gravel Pit				%	
20.Industrial Bas				%	
				%	
				%	
Fract. Acre		**Acreage/Sites**			
21.Developed Pave	28	16.00		100 %	0
22.Undev Paved (F				%	
23.Developed Grav				%	
Acres				%	
24.Undev Gravel (				%	
25.Comm Base Pave				%	
26.Comm Base Grav				%	
27.Backlot				%	
28.Rear Land				%	
29.Pavement				%	

Total Acreage 16.00

Influence Codes

1.Unimproved
2.Excess Frtg
3.Topography
4.Size/Shape
5.Access
6.Restriction
7.Open Space
8.View/Environ
9.Fract Share
Acres
30.Utility R O W
31.Tillable
32.Pasture
33.Orchard
34.Softwood F&O
35.Mixed Wood F&O
36.Hardwood F&O
37.Softwood TG
38.Mixed Wood TG
39.Hardwood TG
40.Wasteland
41.Open Space
42.Mobile Home Si
43.Condo Site
44.Lot Improvemen
45.Subdivision Lo
46.Heavy Ind Sit

Washburn

Washburn

Map Lot 008-005 | Account 515 | Location TABOR ROAD | Card 1 Of 1 | 8/23/2023

Building Style **0**		
1.Conv.	5.Garrison	9.Gambrel
2.Ranch	6.Salt Box	10.Other
3.R Ranch	7.Contemp	11.Split
4.Cape	8.Log	12.
Dwelling Units **0**		
Other Units **0**		
Stories **0**		
1.1	4.1.5	7.
2.2	5.1.75	8.
3.3	6.2.5	9.
Exterior Walls **0**		
1.Wood	5.Stucco	9.T-111
2.Vin/Al	6.Brick	10.Other
3.Compos.	7.Stone	11.
4.Asbestos	8.Concrete	12.
Roof Surface **0**		
1.Asphalt	4.Composit	7.
2.Slate	5.Wood	8.
3.Metal	6.Other	9.
SF Masonry Trim **0**		
OPEN-3-CUSTOM **0**		
OPEN-4-CUSTOM **0**		
Year Built **0**		
Year Remodeled **0**		
Foundation **0**		
1.Concrete	4.Wood	7.
2.C Block	5.Slab	8.
3.Br/Stone	6.Piers	9.
Basement **0**		
1.1/4 Bmt	4.Full Bmt	7.
2.1/2 Bmt	5.None	8.
3.3/4 Bmt	6.	9.None
Bsmt Gar # Cars **0**		
Wet Basement **0**		
1.Dry	4.	7.
2.Damp	5.	8.
3.Wet	6.	9.

SF Bsmt Living **0**		
Fin Bsmt Grade **0 0**		
OPEN 5 OPTIONAL **0**		
Heat Type **100%** **0**		
1.HWBB	5.FWA	9.No Heat
2.HWCI	6.GravWA	10.
3.H Pump	7.Electric	11.
4.Steam	8.Fl/Wall	12.
Cool Type **0%** **9 None**		
1.Refrig	4.W&C Air	7.
2.Evapor	5.	8.
3.H Pump	6.	9.None
Kitchen Style **0**		
1.Modern	4.Obsolete	7.
2.Typical	5.	8.
3.Old Type	6.	9.None
Bath(s) Style **0**		
1.Modern	4.Obsolete	7.
2.Typical	5.	8.
3.Old Type	6.	9.None
# Rooms **0**		
# Bedrooms **0**		
# Full Baths **0**		
# Half Baths **0**		
# Addn Fixtures **0**		
# Fireplaces **0**		

TRIO Software
A Division of Harris Computer Systems

Layout **0**		
1.Typical	4.	7.
2.Inadeq	5.	8.
3.Poor	6.	9.
Attic **0**		
1.1/4 Fin	4.Full Fin	7.
2.1/2 Fin	5.Fl/Stair	8.
3.3/4 Fin	6.	9.None
Insulation **0**		
1.Full	4.Minimal	7.
2.Heavy	5.Partial	8.
3.Capped	6.	9.None
Unfinished % **0%**		
Grade & Factor **0 0%**		
1.E Grade	4.B Grade	7.
2.D Grade	5.A Grade	8.SC Grade
3.C Grade	6.AA Grade	9.Same
SQFT (Footprint) **0**		
Condition **0**		
1.Poor	4.Avg	7.V G
2.Fair	5.Avg+	8.Exc
3.Avg-	6.Good	9.Same
Phys. % Good **0%**		
Funct. % Good **100%**		
Functional Code **9 None**		
1.Incomp	4.Delap	7.No Power
2.O-Built	5.Bsmt	8.LongTerm
3.Damage	6.Common	9.None
Econ. % Good **100%**		
Economic Code **None**		
0.None	3.No Power	7.
1.Location	4.Generate	8.
2.Encroach	9.None	9.
Entrance Code **0**		
1.Interior	4.Vacant	7.
2.Refusal	5.Estimate	8.
3.Informed	6.Reviewed	9.
Information Code **0**		
1.Owner	4.Agent	7.
2.Relative	5.Estimate	8.
3.Tenant	6.Other	9.

Date Inspected

Additions, Outbuildings & Improvements

Type	Year	Units	Grade	Cond	Phys.	Funct.	Sound Value
					%	%	
					%	%	
					%	%	
					%	%	
					%	%	
					%	%	
					%	%	
					%	%	
					%	%	
					%	%	

1.One Story Fram
2.Two Story Fram
3.Three Story Fr
4.1 & 1/2 Story
5.1 & 3/4 Story
6.2 & 1/2 Story
21.Open Frame Por
22.Encl Frame Por
23.Frame Garage
24.Frame Shed
25.Frame Bay Wind
26.1SFr Overhang
27.Unfin Basement
28.Unfinished Att
29.Finished Attic

Map Lot 008-006 | Account 974 | Location TABOR ROAD | Card 1 Of 1 | 8/23/2023

TURNER, LAURA HILL
1232 Main Street
Washburn ME 04786

B6337P320

Previous Owner
TURNER, BRENDA J
1653 WASHBURN ROAD

WASHBURN ME 04786
Sale Date: 6/24/2022

Inspection Witnessed By:

X Date

No./Date	Description	Date Insp.

Notes:

Washburn

Property Data

Neighborhood	**1 Neighborhood One**
Tree Growth Year	**0**
1ST MORTGAGE	**0**
2ND MORTGAGE	**0**
Zone/Land Use	**1 Residential**
Secondary Zone	
Topography	**1 Level**

1.Level	4.Below St	7.LevelBog
2.Rolling	5.Low	8.
3.Above St	6.Swampy	9.

Utilities

1.Public	4.Dr Well	7.Cesspool
2.Water	5.Dug Well	8.
3.Sewer	6.Septic	9.None

Street **1 Paved**

1.Paved	4.Proposed	7.
2.Semi Imp	5.R/O/W	8.
3.Gravel	6.	9.None

TG PLAN YEAR	**0**
Tif District #	**0**

Sale Data

Sale Date	**6/24/2022**
Price	**414,000**
Sale Type	**1 Land Only**

1.Land	4.Mobile	7.C/I L&B
2.L & B	5.Other	8.
3.Building	6.C/I Land	9.

Financing **1 Conventional**

1.Convent	4.Seller	7.
2.FHA/VA	5.Private	8.
3.Assumed	6.Cash	9.Unknown

Validity **2 Related Parties**

1.Valid	4.Split	7.Renovate
2.Related	5.Partial	8.Other
3.Distress	6.Exempt	9.

Verified **5 Public Record**

1.Buyer	4.Agent	7.Family
2.Seller	5.Pub Rec	8.Other
3.Lender	6.MLS	9.

Assessment Record

Year	Land	Buildings	Exempt	Total
2012	26,500	0	0	26,500
2013	34,500	0	0	34,500
2015	34,500	0	0	34,500
2018	34,500	0	0	34,500
2019	63,000	0	0	63,000
2020	63,000	0	0	63,000
2021	63,000	0	0	63,000
2022	63,000	0	0	63,000
2023	65,100	0	0	65,100

Land Data

Front Foot	Type	Effective Frontage	Effective Depth	Influence Factor	Influence Code
11.Regular Lot				%	
12.Delta Triangle				%	
13.Nabla Triangle				%	
14.Rear Land				%	
15.Class I Road				%	
				%	
				%	
Square Foot		**Square Feet**			
16.Class II Road				%	
17.Municipal Rese				%	
18.Munic Sep Lago				%	
19.Gravel Pit				%	
20.Industrial Bas				%	
				%	
				%	
Fract. Acre		**Acreage/Sites**			
21.Developed Pave	31	50.00	100	%	0
22.Undev Paved (F	28	26.00	100	%	0
23.Developed Grav				%	
Acres				%	
24.Undev Gravel (				%	
25.Comm Base Pave				%	
26.Comm Base Grav				%	
27.Backlot				%	
28.Rear Land				%	
29.Pavement				%	

Total Acreage 76.00

Influence Codes

1.Unimproved
2.Excess Frtg
3.Topography
4.Size/Shape
5.Access
6.Restriction
7.Open Space
8.View/Environ
9.Fract Share
Acres
30.Utility R O W
31.Tillable
32.Pasture
33.Orchard
34.Softwood F&O
35.Mixed Wood F&O
36.Hardwood F&O
37.Softwood TG
38.Mixed Wood TG
39.Hardwood TG
40.Wasteland
41.Open Space
42.Mobile Home Si
43.Condo Site
44.Lot Improvemen
45.Subdivision Lo
46.Heavy Ind Sit

Washburn

Map Lot 008-006 | Account 974 | Location TABOR ROAD | Card 1 Of 1 | 8/23/2023

Building Style **0**		
1.Conv.	5.Garrison	9.Gambrel
2.Ranch	6.Salt Box	10.Other
3.R Ranch	7.Contemp	11.Split
4.Cape	8.Log	12.
Dwelling Units **0**		
Other Units **0**		
Stories **0**		
1.1	4.1.5	7.
2.2	5.1.75	8.
3.3	6.2.5	9.
Exterior Walls **0**		
1.Wood	5.Stucco	9.T-111
2.Vin/Al	6.Brick	10.Other
3.Compos.	7.Stone	11.
4.Asbestos	8.Concrete	12.
Roof Surface **0**		
1.Asphalt	4.Composit	7.
2.Slate	5.Wood	8.
3.Metal	6.Other	9.
SF Masonry Trim **0**		
OPEN-3-CUSTOM **0**		
OPEN-4-CUSTOM **0**		
Year Built **0**		
Year Remodeled **0**		
Foundation **0**		
1.Concrete	4.Wood	7.
2.C Block	5.Slab	8.
3.Br/Stone	6.Piers	9.
Basement **0**		
1.1/4 Bmt	4.Full Bmt	7.
2.1/2 Bmt	5.None	8.
3.3/4 Bmt	6.	9.None
Bsmt Gar # Cars **0**		
Wet Basement **0**		
1.Dry	4.	7.
2.Damp	5.	8.
3.Wet	6.	9.

SF Bsmt Living **0**		
Fin Bsmt Grade **0 0**		
OPEN 5 OPTIONAL **0**		
Heat Type **100%** **0**		
1.HWBB	5.FWA	9.No Heat
2.HWCI	6.GravWA	10.
3.H Pump	7.Electric	11.
4.Steam	8.Fl/Wall	12.
Cool Type **0%** **9 None**		
1.Refrig	4.W&C Air	7.
2.Evapor	5.	8.
3.H Pump	6.	9.None
Kitchen Style **0**		
1.Modern	4.Obsolete	7.
2.Typical	5.	8.
3.Old Type	6.	9.None
Bath(s) Style **0**		
1.Modern	4.Obsolete	7.
2.Typical	5.	8.
3.Old Type	6.	9.None
# Rooms **0**		
# Bedrooms **0**		
# Full Baths **0**		
# Half Baths **0**		
# Addn Fixtures **0**		
# Fireplaces **0**		

TRIO Software
A Division of Harris Computer Systems

Layout **0**		
1.Typical	4.	7.
2.Inadeq	5.	8.
3.Poor	6.	9.
Attic **0**		
1.1/4 Fin	4.Full Fin	7.
2.1/2 Fin	5.Fl/Stair	8.
3.3/4 Fin	6.	9.None
Insulation **0**		
1.Full	4.Minimal	7.
2.Heavy	5.Partial	8.
3.Capped	6.	9.None
Unfinished % **0%**		
Grade & Factor **0 0%**		
1.E Grade	4.B Grade	7.
2.D Grade	5.A Grade	8.SC Grade
3.C Grade	6.AA Grade	9.Same
SQFT (Footprint) **0**		
Condition **0**		
1.Poor	4.Avg	7.V G
2.Fair	5.Avg+	8.Exc
3.Avg-	6.Good	9.Same
Phys. % Good **0%**		
Funct. % Good **100%**		
Functional Code **9 None**		
1.Incomp	4.Delap	7.No Power
2.O-Built	5.Bsmt	8.LongTerm
3.Damage	6.Common	9.None
Econ. % Good **100%**		
Economic Code **None**		
0.None	3.No Power	7.
1.Location	4.Generate	8.
2.Encroach	9.None	9.
Entrance Code **0**		
1.Interior	4.Vacant	7.
2.Refusal	5.Estimate	8.
3.Informed	6.Reviewed	9.
Information Code **0**		
1.Owner	4.Agent	7.
2.Relative	5.Estimate	8.
3.Tenant	6.Other	9.

Date Inspected

Additions, Outbuildings & Improvements

Type	Year	Units	Grade	Cond	Phys.	Funct.	Sound Value
					%	%	
					%	%	
					%	%	
					%	%	
					%	%	
					%	%	
					%	%	
					%	%	
					%	%	
					%	%	

1.One Story Fram
2.Two Story Fram
3.Three Story Fr
4.1 & 1/2 Story
5.1 & 3/4 Story
6.2 & 1/2 Story
21.Open Frame Por
22.Encl Frame Por
23.Frame Garage
24.Frame Shed
25.Frame Bay Wind
26.1SFr Overhang
27.Unfin Basement
28.Unfinished Att
29.Finished Attic

Map Lot 008-007 Account 698 Location 264 Tabor Road Card 1 Of 1 8/23/2023

Libby, Daniel P
264 TABOR RD
WASHBURN ME 04786

B5189P81

Property Data

Neighborhood **1 Neighborhood One**

Tree Growth Year **0**

1ST MORTGAGE **0**

2ND MORTGAGE **0**

Zone/Land Use **1 Residential**

Secondary Zone

Topography **2 Rolling**

1.Level	4.Below St	7.LevelBog
2.Rolling	5.Low	8.
3.Above St	6.Swampy	9.

Utilities **4 Drilled Well** **6 Septic System**

1.Public	4.Dr Well	7.Cesspool
2.Water	5.Dug Well	8.
3.Sewer	6.Septic	9.None

Street **1 Paved**

1.Paved	4.Proposed	7.
2.Semi Imp	5.R/O/W	8.
3.Gravel	6.	9.None

TG PLAN YEAR **0**

Tif District # **0**

Sale Data

Sale Date **8/13/2001**

Price **6,000**

Sale Type **2 Land & Buildings**

1.Land	4.Mobile	7.C/I L&B
2.L & B	5.Other	8.
3.Building	6.C/I Land	9.

Financing

1.Convent	4.Seller	7.
2.FHA/VA	5.Private	8.
3.Assumed	6.Cash	9.Unknown

Validity **1 Arms Length Sale**

1.Valid	4.Split	7.Renovate
2.Related	5.Partial	8.Other
3.Distress	6.Exempt	9.

Verified **5 Public Record**

1.Buyer	4.Agent	7.Family
2.Seller	5.Pub Rec	8.Other
3.Lender	6.MLS	9.

Assessment Record

Year	Land	Buildings	Exempt	Total
2012	5,300	7,400	8,800	3,900
2013	6,800	7,400	8,800	5,400
2015	6,800	7,400	9,000	5,200
2018	6,800	7,400	14,200	0
2019	14,900	17,500	20,000	12,400
2020	14,900	12,000	25,000	1,900
2021	14,900	12,000	25,000	1,900
2022	14,900	12,600	25,000	2,500
2023	19,800	14,900	25,000	9,700

Land Data

Front Foot	Type	Effective Frontage	Effective Depth	Influence Factor	Influence Code
11.Regular Lot				%	
12.Delta Triangle				%	
13.Nabla Triangle				%	
14.Rear Land				%	
15.Class I Road				%	
				%	
				%	
Square Foot		**Square Feet**			
16.Class II Road				%	
17.Municipal Rese				%	
18.Munic Sep Lago				%	
19.Gravel Pit				%	
20.Industrial Bas				%	
				%	
				%	
Fract. Acre		**Acreage/Sites**			
21.Developed Pave	21	0.81		100 %	0
22.Undev Paved (F				%	
23.Developed Grav				%	
Acres				%	
24.Undev Gravel (				%	
25.Comm Base Pave				%	
26.Comm Base Grav				%	
27.Backlot				%	
28.Rear Land				%	
29.Pavement				%	

Total Acreage 0.81

Influence Codes

1.Unimproved
2.Excess Frtg
3.Topography
4.Size/Shape
5.Access
6.Restriction
7.Open Space
8.View/Environ
9.Fract Share
Acres
30.Utility R O W
31.Tillable
32.Pasture
33.Orchard
34.Softwood F&O
35.Mixed Wood F&O
36.Hardwood F&O
37.Softwood TG
38.Mixed Wood TG
39.Hardwood TG
40.Wasteland
41.Open Space
42.Mobile Home Si
43.Condo Site
44.Lot Improvemen
45.Subdivision Lo
46.Heavy Ind Sit

Inspection Witnessed By:

X Date

No./Date	Description	Date Insp.

Notes:
*5-8-2019 -20% for delap on 1SF/B.

Washburn

Washburn

Map Lot 008-007 | Account 698 | Location 264 Tabor Road | Card 1 Of 1 | 8/23/2023

Building Style	**4 Cape Cod**		
1.Conv.	5.Garrison	9.Gambrel	
2.Ranch	6.Salt Box	10.Other	
3.R Ranch	7.Contemp	11.Split	
4.Cape	8.Log	12.	
Dwelling Units	**1**		
Other Units	**0**		
Stories	**4 One & 1/2 Story**		
1.1	4.1.5	7.	
2.2	5.1.75	8.	
3.3	6.2.5	9.	
Exterior Walls	**4 Asbestos Siding**		
1.Wood	5.Stucco	9.T-111	
2.Vin/Al	6.Brick	10.Other	
3.Compos.	7.Stone	11.	
4.Asbestos	8.Concrete	12.	
Roof Surface	**1 Asphalt Shingles**		
1.Asphalt	4.Composit	7.	
2.Slate	5.Wood	8.	
3.Metal	6.Other	9.	
SF Masonry Trim	**0**		
OPEN-3-CUSTOM	**0**		
OPEN-4-CUSTOM	**0**		
Year Built	**1930**		
Year Remodeled	**0**		
Foundation	**3 Brick &/or Stone**		
1.Concrete	4.Wood	7.	
2.C Block	5.Slab	8.	
3.Br/Stone	6.Piers	9.	
Basement	**4 Full Basement**		
1.1/4 Bmt	4.Full Bmt	7.	
2.1/2 Bmt	5.None	8.	
3.3/4 Bmt	6.	9.None	
Bsmt Gar # Cars	**0**		
Wet Basement	**2 Damp Basement**		
1.Dry	4.	7.	
2.Damp	5.	8.	
3.Wet	6.	9.	

SF Bsmt Living	**0**		
Fin Bsmt Grade	**0 0**		
OPEN 5 OPTIONAL	**0**		
Heat Type	**100%**	**9 Not Heated**	
1.HWBB	5.FWA	9.No Heat	
2.HWCI	6.GravWA	10.	
3.H Pump	7.Electric	11.	
4.Steam	8.Fl/Wall	12.	
Cool Type	**0%**	**9 None**	
1.Refrig	4.W&C Air	7.	
2.Evapor	5.	8.	
3.H Pump	6.	9.None	
Kitchen Style	**2 Typical**		
1.Modern	4.Obsolete	7.	
2.Typical	5.	8.	
3.Old Type	6.	9.None	
Bath(s) Style	**2 Typical Bath(s)**		
1.Modern	4.Obsolete	7.	
2.Typical	5.	8.	
3.Old Type	6.	9.None	
# Rooms	**5**		
# Bedrooms	**2**		
# Full Baths	**1**		
# Half Baths	**0**		
# Addn Fixtures	**0**		
# Fireplaces	**0**		

TRIO Software
A Division of Harris Computer Systems

Layout	**1 Typical**		
1.Typical	4.	7.	
2.Inadeq	5.	8.	
3.Poor	6.	9.	
Attic	**9 None**		
1.1/4 Fin	4.Full Fin	7.	
2.1/2 Fin	5.Fl/Stair	8.	
3.3/4 Fin	6.	9.None	
Insulation	**4 Minimal**		
1.Full	4.Minimal	7.	
2.Heavy	5.Partial	8.	
3.Capped	6.	9.None	
Unfinished %	**0%**		
Grade & Factor	**2 Fair 100%**		
1.E Grade	4.B Grade	7.	
2.D Grade	5.A Grade	8.SC Grade	
3.C Grade	6.AA Grade	9.Same	
SQFT (Footprint)	**672**		
Condition	**2 Fair**		
1.Poor	4.Avg	7.V G	
2.Fair	5.Avg+	8.Exc	
3.Avg-	6.Good	9.Same	
Phys. % Good	**0%**		
Funct. % Good	**50%**		
Functional Code	**4 Delapidation**		
1.Incomp	4.Delap	7.No Power	
2.O-Built	5.Bsmt	8.LongTerm	
3.Damage	6.Common	9.None	
Econ. % Good	**100%**		
Economic Code	**None**		
0.None	3.No Power	7.	
1.Location	4.Generate	8.	
2.Encroach	9.None	9.	
Entrance Code	**5 Estimated**		
1.Interior	4.Vacant	7.	
2.Refusal	5.Estimate	8.	
3.Informed	6.Reviewed	9.	
Information Code	**5 Estimate**		
1.Owner	4.Agent	7.	
2.Relative	5.Estimate	8.	
3.Tenant	6.Other	9.	

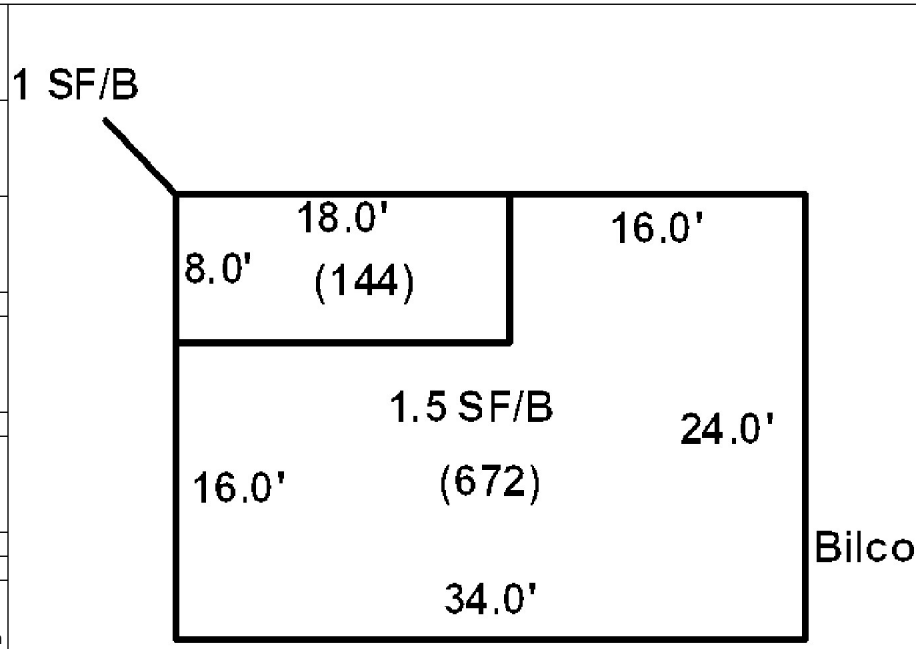

Date Inspected 10/18/2018

Additions, Outbuildings & Improvements

Type	Year	Units	Grade	Cond	Phys.	Funct.	Sound Value
20 1 Story/Bsmt	1930	144	9 100	9	0 %	80 %	
					%	%	
					%	%	
					%	%	
					%	%	
					%	%	
					%	%	
					%	%	
					%	%	
					%	%	

1.One Story Fram
2.Two Story Fram
3.Three Story Fr
4.1 & 1/2 Story
5.1 & 3/4 Story
6.2 & 1/2 Story
21.Open Frame Por
22.Encl Frame Por
23.Frame Garage
24.Frame Shed
25.Frame Bay Wind
26.1SFr Overhang
27.Unfin Basement
28.Unfinished Att
29.Finished Attic

Map Lot 008-008 Account 157 Location Tabor Road Card 1 Of 1 8/23/2023

Turner, Dale A
Turner, Cynthia E
30 TABOR ROAD
WASHBURN ME 04786

Property Data

Neighborhood **1 Neighborhood One**

Tree Growth Year **0**

1ST MORTGAGE **0**

2ND MORTGAGE **0**

Zone/Land Use **1 Residential**

Secondary Zone

Topography **2 Rolling**

1.Level	4.Below St	7.LevelBog
2.Rolling	5.Low	8.
3.Above St	6.Swampy	9.

Utilities

1.Public	4.Dr Well	7.Cesspool
2.Water	5.Dug Well	8.
3.Sewer	6.Septic	9.None

Street **1 Paved**

1.Paved	4.Proposed	7.
2.Semi Imp	5.R/O/W	8.
3.Gravel	6.	9.None

TG PLAN YEAR **0**

Tif District # **0**

Sale Data

Sale Date

Price

Sale Type

1.Land	4.Mobile	7.C/I L&B
2.L & B	5.Other	8.
3.Building	6.C/I Land	9.

Financing

1.Convent	4.Seller	7.
2.FHA/VA	5.Private	8.
3.Assumed	6.Cash	9.Unknown

Validity

1.Valid	4.Split	7.Renovate
2.Related	5.Partial	8.Other
3.Distress	6.Exempt	9.

Verified

1.Buyer	4.Agent	7.Family
2.Seller	5.Pub Rec	8.Other
3.Lender	6.MLS	9.

Assessment Record

Year	Land	Buildings	Exempt	Total
2012	23,400	0	0	23,400
2013	30,400	0	0	30,400
2015	30,400	0	0	30,400
2018	30,400	0	0	30,400
2019	53,500	0	0	53,500
2020	53,500	0	0	53,500
2021	53,500	0	0	53,500
2022	53,500	0	0	53,500
2023	57,300	0	0	57,300

Land Data

Front Foot	Type	Effective Frontage	Effective Depth	Influence Factor	Influence Code
11.Regular Lot				%	
12.Delta Triangle				%	
13.Nabla Triangle				%	
14.Rear Land				%	
15.Class I Road				%	
				%	
				%	
Square Foot		**Square Feet**			
16.Class II Road				%	
17.Municipal Rese				%	
18.Munic Sep Lago				%	
19.Gravel Pit				%	
20.Industrial Bas				%	
				%	
				%	
Fract. Acre		**Acreage/Sites**			
21.Developed Pave	28	47.00	100	%	0
22.Undev Paved (F	31	30.00	100	%	0
23.Developed Grav				%	
Acres				%	
24.Undev Gravel (				%	
25.Comm Base Pave				%	
26.Comm Base Grav				%	
27.Backlot				%	
28.Rear Land				%	
29.Pavement				%	

Total Acreage 77.00

Influence Codes

1.Unimproved
2.Excess Frtg
3.Topography
4.Size/Shape
5.Access
6.Restriction
7.Open Space
8.View/Environ
9.Fract Share
Acres
30.Utility R O W
31.Tillable
32.Pasture
33.Orchard
34.Softwood F&O
35.Mixed Wood F&O
36.Hardwood F&O
37.Softwood TG
38.Mixed Wood TG
39.Hardwood TG
40.Wasteland
41.Open Space
42.Mobile Home Si
43.Condo Site
44.Lot Improvemen
45.Subdivision Lo
46.Heavy Ind Sit

Inspection Witnessed By:

X Date

No./Date	Description	Date Insp.

Notes:

Washburn

Washburn

Map Lot 008-008 | Account 157 | Location Tabor Road | Card 1 Of 1 | 8/23/2023

Building Style **0**		
1.Conv.	5.Garrison	9.Gambrel
2.Ranch	6.Salt Box	10.Other
3.R Ranch	7.Contemp	11.Split
4.Cape	8.Log	12.
Dwelling Units **0**		
Other Units **0**		
Stories **0**		
1.1	4.1.5	7.
2.2	5.1.75	8.
3.3	6.2.5	9.
Exterior Walls **0**		
1.Wood	5.Stucco	9.T-111
2.Vin/Al	6.Brick	10.Other
3.Compos.	7.Stone	11.
4.Asbestos	8.Concrete	12.
Roof Surface **0**		
1.Asphalt	4.Composit	7.
2.Slate	5.Wood	8.
3.Metal	6.Other	9.
SF Masonry Trim **0**		
OPEN-3-CUSTOM **0**		
OPEN-4-CUSTOM **0**		
Year Built **0**		
Year Remodeled **0**		
Foundation **0**		
1.Concrete	4.Wood	7.
2.C Block	5.Slab	8.
3.Br/Stone	6.Piers	9.
Basement **0**		
1.1/4 Bmt	4.Full Bmt	7.
2.1/2 Bmt	5.None	8.
3.3/4 Bmt	6.	9.None
Bsmt Gar # Cars **0**		
Wet Basement **0**		
1.Dry	4.	7.
2.Damp	5.	8.
3.Wet	6.	9.

SF Bsmt Living **0**		
Fin Bsmt Grade **0 0**		
OPEN 5 OPTIONAL **0**		
Heat Type **100%** **0**		
1.HWBB	5.FWA	9.No Heat
2.HWCI	6.GravWA	10.
3.H Pump	7.Electric	11.
4.Steam	8.Fl/Wall	12.
Cool Type **0%** **9 None**		
1.Refrig	4.W&C Air	7.
2.Evapor	5.	8.
3.H Pump	6.	9.None
Kitchen Style **0**		
1.Modern	4.Obsolete	7.
2.Typical	5.	8.
3.Old Type	6.	9.None
Bath(s) Style **0**		
1.Modern	4.Obsolete	7.
2.Typical	5.	8.
3.Old Type	6.	9.None
# Rooms **0**		
# Bedrooms **0**		
# Full Baths **0**		
# Half Baths **0**		
# Addn Fixtures **0**		
# Fireplaces **0**		

TRIO Software
A Division of Harris Computer Systems

Layout **0**		
1.Typical	4.	7.
2.Inadeq	5.	8.
3.Poor	6.	9.
Attic **0**		
1.1/4 Fin	4.Full Fin	7.
2.1/2 Fin	5.Fl/Stair	8.
3.3/4 Fin	6.	9.None
Insulation **0**		
1.Full	4.Minimal	7.
2.Heavy	5.Partial	8.
3.Capped	6.	9.None
Unfinished % **0%**		
Grade & Factor **0 0%**		
1.E Grade	4.B Grade	7.
2.D Grade	5.A Grade	8.SC Grade
3.C Grade	6.AA Grade	9.Same
SQFT (Footprint) **0**		
Condition **0**		
1.Poor	4.Avg	7.V G
2.Fair	5.Avg+	8.Exc
3.Avg-	6.Good	9.Same
Phys. % Good **0%**		
Funct. % Good **100%**		
Functional Code **9 None**		
1.Incomp	4.Delap	7.No Power
2.O-Built	5.Bsmt	8.LongTerm
3.Damage	6.Common	9.None
Econ. % Good **100%**		
Economic Code **None**		
0.None	3.No Power	7.
1.Location	4.Generate	8.
2.Encroach	9.None	9.
Entrance Code **0**		
1.Interior	4.Vacant	7.
2.Refusal	5.Estimate	8.
3.Informed	6.Reviewed	9.
Information Code **0**		
1.Owner	4.Agent	7.
2.Relative	5.Estimate	8.
3.Tenant	6.Other	9.

Date Inspected

Additions, Outbuildings & Improvements

Type	Year	Units	Grade	Cond	Phys.	Funct.	Sound Value
					%	%	
					%	%	
					%	%	
					%	%	
					%	%	
					%	%	
					%	%	
					%	%	
					%	%	
					%	%	

1.One Story Fram
2.Two Story Fram
3.Three Story Fr
4.1 & 1/2 Story
5.1 & 3/4 Story
6.2 & 1/2 Story
21.Open Frame Por
22.Encl Frame Por
23.Frame Garage
24.Frame Shed
25.Frame Bay Wind
26.1SFr Overhang
27.Unfin Basement
28.Unfinished Att
29.Finished Attic

Map Lot 008-009 Account 622 Location TABOR ROAD Card 1 Of 1 8/23/2023

HEWITT, COLBY
HEWITT, GARY
360 TABOR ROAD
WASHBURN ME 04786

B6352P103

Previous Owner
GOUGH, ROBERT
PO BOX 403

MAPLETON ME 04757
Sale Date: 7/29/2022

Previous Owner
PLISSEY, MARILYN B
C/O STEVE PLISSEY
601 YOHO HEAD ROAD
MACHIASPORT ME 04655
Sale Date: 9/21/2020

Inspection Witnessed By:

X Date

No./Date	Description	Date Insp.

Notes:

Property Data

Neighborhood **1 Neighborhood One**

Tree Growth Year **0**

1ST MORTGAGE **0**

2ND MORTGAGE **0**

Zone/Land Use **1 Residential**

Secondary Zone

Topography **2 Rolling**

1.Level	4.Below St	7.LevelBog
2.Rolling	5.Low	8.
3.Above St	6.Swampy	9.

Utilities

1.Public	4.Dr Well	7.Cesspool
2.Water	5.Dug Well	8.
3.Sewer	6.Septic	9.None

Street **1 Paved**

1.Paved	4.Proposed	7.
2.Semi Imp	5.R/O/W	8.
3.Gravel	6.	9.None

TG PLAN YEAR **0**

Tif District # **0**

Sale Data

Sale Date **7/29/2022**

Price **48,000**

Sale Type **1 Land Only**

1.Land	4.Mobile	7.C/I L&B
2.L & B	5.Other	8.
3.Building	6.C/I Land	9.

Financing **9 Unknown**

1.Convent	4.Seller	7.
2.FHA/VA	5.Private	8.
3.Assumed	6.Cash	9.Unknown

Validity **1 Arms Length Sale**

1.Valid	4.Split	7.Renovate
2.Related	5.Partial	8.Other
3.Distress	6.Exempt	9.

Verified **5 Public Record**

1.Buyer	4.Agent	7.Family
2.Seller	5.Pub Rec	8.Other
3.Lender	6.MLS	9.

Assessment Record

Year	Land	Buildings	Exempt	Total
2012	17,200	0	0	17,200
2013	22,400	0	0	22,400
2015	22,400	0	0	22,400
2018	22,400	0	0	22,400
2019	36,000	0	0	36,000
2020	36,000	0	0	36,000
2021	36,000	0	0	36,000
2022	36,000	0	0	36,000
2023	42,200	0	0	42,200

Land Data

Front Foot	Type	Effective Frontage	Effective Depth	Influence Factor	Influence Code
11.Regular Lot				%	
12.Delta Triangle				%	
13.Nabla Triangle				%	
14.Rear Land				%	
15.Class I Road				%	
				%	
				%	
Square Foot		**Square Feet**			
16.Class II Road				%	
17.Municipal Rese				%	
18.Munic Sep Lago				%	
19.Gravel Pit				%	
20.Industrial Bas				%	
				%	
				%	
Fract. Acre		**Acreage/Sites**			
21.Developed Pave	28	65.80	100	%	0
22.Undev Paved (F	31	4.00	100	%	0
23.Developed Grav				%	
Acres				%	
24.Undev Gravel (				%	
25.Comm Base Pave				%	
26.Comm Base Grav				%	
27.Backlot				%	
28.Rear Land				%	
29.Pavement				%	

Total Acreage 69.80

Influence Codes

1.Unimproved
2.Excess Frtg
3.Topography
4.Size/Shape
5.Access
6.Restriction
7.Open Space
8.View/Environ
9.Fract Share
Acres
30.Utility R O W
31.Tillable
32.Pasture
33.Orchard
34.Softwood F&O
35.Mixed Wood F&O
36.Hardwood F&O
37.Softwood TG
38.Mixed Wood TG
39.Hardwood TG
40.Wasteland
41.Open Space
42.Mobile Home Si
43.Condo Site
44.Lot Improvemen
45.Subdivision Lo
46.Heavy Ind Sit

Washburn

Washburn

Map Lot 008-009 | Account 622 | Location TABOR ROAD | Card 1 Of 1 | 8/23/2023

Building Style **0**		
1.Conv.	5.Garrison	9.Gambrel
2.Ranch	6.Salt Box	10.Other
3.R Ranch	7.Contemp	11.Split
4.Cape	8.Log	12.
Dwelling Units **0**		
Other Units **0**		
Stories **0**		
1.1	4.1.5	7.
2.2	5.1.75	8.
3.3	6.2.5	9.
Exterior Walls **0**		
1.Wood	5.Stucco	9.T-111
2.Vin/Al	6.Brick	10.Other
3.Compos.	7.Stone	11.
4.Asbestos	8.Concrete	12.
Roof Surface **0**		
1.Asphalt	4.Composit	7.
2.Slate	5.Wood	8.
3.Metal	6.Other	9.
SF Masonry Trim **0**		
OPEN-3-CUSTOM **0**		
OPEN-4-CUSTOM **0**		
Year Built **0**		
Year Remodeled **0**		
Foundation **0**		
1.Concrete	4.Wood	7.
2.C Block	5.Slab	8.
3.Br/Stone	6.Piers	9.
Basement **0**		
1.1/4 Bmt	4.Full Bmt	7.
2.1/2 Bmt	5.None	8.
3.3/4 Bmt	6.	9.None
Bsmt Gar # Cars **0**		
Wet Basement **0**		
1.Dry	4.	7.
2.Damp	5.	8.
3.Wet	6.	9.

SF Bsmt Living **0**		
Fin Bsmt Grade **0 0**		
OPEN 5 OPTIONAL **0**		
Heat Type **100%** **0**		
1.HWBB	5.FWA	9.No Heat
2.HWCI	6.GravWA	10.
3.H Pump	7.Electric	11.
4.Steam	8.Fl/Wall	12.
Cool Type **0%** **9 None**		
1.Refrig	4.W&C Air	7.
2.Evapor	5.	8.
3.H Pump	6.	9.None
Kitchen Style **0**		
1.Modern	4.Obsolete	7.
2.Typical	5.	8.
3.Old Type	6.	9.None
Bath(s) Style **0**		
1.Modern	4.Obsolete	7.
2.Typical	5.	8.
3.Old Type	6.	9.None
# Rooms **0**		
# Bedrooms **0**		
# Full Baths **0**		
# Half Baths **0**		
# Addn Fixtures **0**		
# Fireplaces **0**		

TRIO Software
A Division of Harris Computer Systems

Layout **0**		
1.Typical	4.	7.
2.Inadeq	5.	8.
3.Poor	6.	9.
Attic **0**		
1.1/4 Fin	4.Full Fin	7.
2.1/2 Fin	5.Fl/Stair	8.
3.3/4 Fin	6.	9.None
Insulation **0**		
1.Full	4.Minimal	7.
2.Heavy	5.Partial	8.
3.Capped	6.	9.None
Unfinished % **0%**		
Grade & Factor **0 0%**		
1.E Grade	4.B Grade	7.
2.D Grade	5.A Grade	8.SC Grade
3.C Grade	6.AA Grade	9.Same
SQFT (Footprint) **0**		
Condition **0**		
1.Poor	4.Avg	7.V G
2.Fair	5.Avg+	8.Exc
3.Avg-	6.Good	9.Same
Phys. % Good **0%**		
Funct. % Good **100%**		
Functional Code **9 None**		
1.Incomp	4.Delap	7.No Power
2.O-Built	5.Bsmt	8.LongTerm
3.Damage	6.Common	9.None
Econ. % Good **100%**		
Economic Code **None**		
0.None	3.No Power	7.
1.Location	4.Generate	8.
2.Encroach	9.None	9.
Entrance Code **0**		
1.Interior	4.Vacant	7.
2.Refusal	5.Estimate	8.
3.Informed	6.Reviewed	9.
Information Code **0**		
1.Owner	4.Agent	7.
2.Relative	5.Estimate	8.
3.Tenant	6.Other	9.

Date Inspected

Additions, Outbuildings & Improvements

Type	Year	Units	Grade	Cond	Phys.	Funct.	Sound Value
					%	%	
					%	%	
					%	%	
					%	%	
					%	%	
					%	%	
					%	%	
					%	%	
					%	%	
					%	%	

1.One Story Fram
2.Two Story Fram
3.Three Story Fr
4.1 & 1/2 Story
5.1 & 3/4 Story
6.2 & 1/2 Story
21.Open Frame Por
22.Encl Frame Por
23.Frame Garage
24.Frame Shed
25.Frame Bay Wind
26.1SFr Overhang
27.Unfin Basement
28.Unfinished Att
29.Finished Attic

Map Lot 008-010 Account 783 Location 354 TABOR ROAD Card 1 Of 1 8/23/2023

NOYES, CHARLES
358 Washburn Road, Cabin 2
Caribou ME 04736

B5887P62

Property Data

Neighborhood **1 Neighborhood One**

Tree Growth Year **0**

1ST MORTGAGE **0**

2ND MORTGAGE **0**

Zone/Land Use **1 Residential**

Secondary Zone

Topography **2 Rolling**

1.Level	4.Below St	7.LevelBog
2.Rolling	5.Low	8.
3.Above St	6.Swampy	9.

Utilities **4 Drilled Well** **6 Septic System**

1.Public	4.Dr Well	7.Cesspool
2.Water	5.Dug Well	8.
3.Sewer	6.Septic	9.None

Street **1 Paved**

1.Paved	4.Proposed	7.
2.Semi Imp	5.R/O/W	8.
3.Gravel	6.	9.None

TG PLAN YEAR **0**

Tif District # **0**

Sale Data

Sale Date **5/16/1991**

Price **20,000**

Sale Type **2 Land & Buildings**

1.Land	4.Mobile	7.C/I L&B
2.L & B	5.Other	8.
3.Building	6.C/I Land	9.

Financing

1.Convent	4.Seller	7.
2.FHA/VA	5.Private	8.
3.Assumed	6.Cash	9.Unknown

Validity **1 Arms Length Sale**

1.Valid	4.Split	7.Renovate
2.Related	5.Partial	8.Other
3.Distress	6.Exempt	9.

Verified **5 Public Record**

1.Buyer	4.Agent	7.Family
2.Seller	5.Pub Rec	8.Other
3.Lender	6.MLS	9.

Assessment Record

Year	Land	Buildings	Exempt	Total
2012	8,200	11,100	8,800	10,500
2013	10,600	11,100	8,800	12,900
2015	10,600	11,100	9,000	12,700
2018	10,600	11,100	18,400	3,300
2019	18,800	16,200	20,000	15,000
2020	18,800	16,200	0	35,000
2021	18,800	16,200	0	35,000
2022	18,800	17,000	0	35,800
2023	24,700	20,200	0	44,900

Land Data

Front Foot	Type	Effective Frontage	Effective Depth	Influence Factor	Influence Code
11.Regular Lot				%	
12.Delta Triangle				%	
13.Nabla Triangle				%	
14.Rear Land				%	
15.Class I Road				%	
				%	
				%	
Square Foot		**Square Feet**			
16.Class II Road				%	
17.Municipal Rese				%	
18.Munic Sep Lago				%	
19.Gravel Pit				%	
20.Industrial Bas				%	
				%	
				%	
Fract. Acre		**Acreage/Sites**			
21.Developed Pave	21	1.00	100	%	0
22.Undev Paved (F	28	4.62	100	%	0
23.Developed Grav				%	
Acres				%	
24.Undev Gravel (				%	
25.Comm Base Pave				%	
26.Comm Base Grav				%	
27.Backlot				%	
28.Rear Land				%	
29.Pavement				%	

Total Acreage 5.62

Influence Codes

1.Unimproved
2.Excess Frtg
3.Topography
4.Size/Shape
5.Access
6.Restriction
7.Open Space
8.View/Environ
9.Fract Share
Acres
30.Utility R O W
31.Tillable
32.Pasture
33.Orchard
34.Softwood F&O
35.Mixed Wood F&O
36.Hardwood F&O
37.Softwood TG
38.Mixed Wood TG
39.Hardwood TG
40.Wasteland
41.Open Space
42.Mobile Home Si
43.Condo Site
44.Lot Improvemen
45.Subdivision Lo
46.Heavy Ind Sit

Inspection Witnessed By:

X Date

No./Date	Description	Date Insp.

Notes:

Washburn

Washburn

Map Lot 008-010 | Account 783 | Location 354 TABOR ROAD | Card 1 Of 1 | 8/23/2023

Building Style	**9 Gambrel**		
1.Conv.	5.Garrison	9.Gambrel	
2.Ranch	6.Salt Box	10.Other	
3.R Ranch	7.Contemp	11.Split	
4.Cape	8.Log	12.	
Dwelling Units	**1**		
Other Units	**0**		
Stories	**5 One & 3/4 Story**		
1.1	4.1.5	7.	
2.2	5.1.75	8.	
3.3	6.2.5	9.	
Exterior Walls	**1 Wood Siding**		
1.Wood	5.Stucco	9.T-111	
2.Vin/Al	6.Brick	10.Other	
3.Compos.	7.Stone	11.	
4.Asbestos	8.Concrete	12.	
Roof Surface	**1 Asphalt Shingles**		
1.Asphalt	4.Composit	7.	
2.Slate	5.Wood	8.	
3.Metal	6.Other	9.	
SF Masonry Trim	**0**		
OPEN-3-CUSTOM	**0**		
OPEN-4-CUSTOM	**0**		
Year Built	**1880**		
Year Remodeled	**0**		
Foundation	**6 Piers**		
1.Concrete	4.Wood	7.	
2.C Block	5.Slab	8.	
3.Br/Stone	6.Piers	9.	
Basement	**9 No Basement**		
1.1/4 Bmt	4.Full Bmt	7.	
2.1/2 Bmt	5.None	8.	
3.3/4 Bmt	6.	9.None	
Bsmt Gar # Cars	**0**		
Wet Basement	**9 No Basement**		
1.Dry	4.	7.	
2.Damp	5.	8.	
3.Wet	6.	9.	

SF Bsmt Living	**0**		
Fin Bsmt Grade	**0 0**		
OPEN 5 OPTIONAL	**0**		
Heat Type	**100%**	**5 Forced Warm Air**	
1.HWBB	5.FWA	9.No Heat	
2.HWCI	6.GravWA	10.	
3.H Pump	7.Electric	11.	
4.Steam	8.Fl/Wall	12.	
Cool Type	**0%**	**9 None**	
1.Refrig	4.W&C Air	7.	
2.Evapor	5.	8.	
3.H Pump	6.	9.None	
Kitchen Style	**2 Typical**		
1.Modern	4.Obsolete	7.	
2.Typical	5.	8.	
3.Old Type	6.	9.None	
Bath(s) Style	**2 Typical Bath(s)**		
1.Modern	4.Obsolete	7.	
2.Typical	5.	8.	
3.Old Type	6.	9.None	
# Rooms	**6**		
# Bedrooms	**3**		
# Full Baths	**1**		
# Half Baths	**0**		
# Addn Fixtures	**0**		
# Fireplaces	**0**		

TRIO Software
A Division of Harris Computer Systems

Layout	**1 Typical**		
1.Typical	4.	7.	
2.Inadeq	5.	8.	
3.Poor	6.	9.	
Attic	**9 None**		
1.1/4 Fin	4.Full Fin	7.	
2.1/2 Fin	5.Fl/Stair	8.	
3.3/4 Fin	6.	9.None	
Insulation	**4 Minimal**		
1.Full	4.Minimal	7.	
2.Heavy	5.Partial	8.	
3.Capped	6.	9.None	
Unfinished %	**0%**		
Grade & Factor	**2 Fair 100%**		
1.E Grade	4.B Grade	7.	
2.D Grade	5.A Grade	8.SC Grade	
3.C Grade	6.AA Grade	9.Same	
SQFT (Footprint)	**425**		
Condition	**2 Fair**		
1.Poor	4.Avg	7.V G	
2.Fair	5.Avg+	8.Exc	
3.Avg-	6.Good	9.Same	
Phys. % Good	**0%**		
Funct. % Good	**50%**		
Functional Code	**4 Delapidation**		
1.Incomp	4.Delap	7.No Power	
2.O-Built	5.Bsmt	8.LongTerm	
3.Damage	6.Common	9.None	
Econ. % Good	**100%**		
Economic Code	**None**		
0.None	3.No Power	7.	
1.Location	4.Generate	8.	
2.Encroach	9.None	9.	
Entrance Code	**1 Interior Inspect**		
1.Interior	4.Vacant	7.	
2.Refusal	5.Estimate	8.	
3.Informed	6.Reviewed	9.	
Information Code	**1 Owner**		
1.Owner	4.Agent	7.	
2.Relative	5.Estimate	8.	
3.Tenant	6.Other	9.	

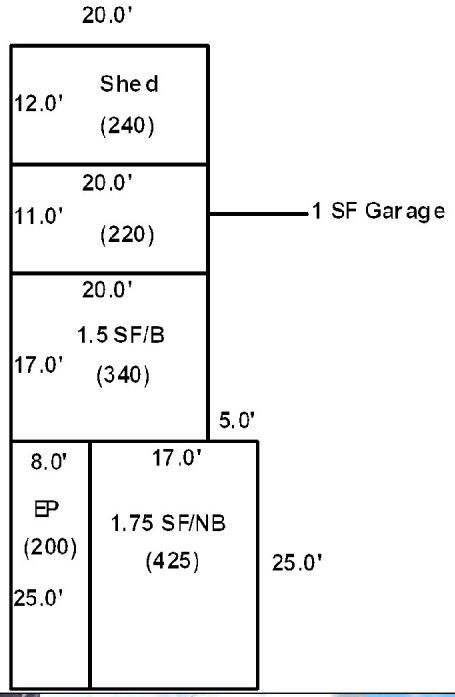

Date Inspected 10/18/2018

Additions, Outbuildings & Improvements

Type	Year	Units	Grade	Cond	Phys.	Funct.	Sound Value
22 Encl Frame Porch	1910	200	2 100	2	0 %	60 %	
14 1.5 Story/Bsmt	1910	340	2 100	2	0 %	60 %	
23 Frame Garage	1910	220	2 100	2	0 %	60 %	
24 Frame Shed	1940	240	2 100	2	0 %	60 %	
					%	%	
					%	%	
					%	%	
					%	%	
					%	%	
					%	%	

1.One Story Fram
2.Two Story Fram
3.Three Story Fr
4.1 & 1/2 Story
5.1 & 3/4 Story
6.2 & 1/2 Story
21.Open Frame Por
22.Encl Frame Por
23.Frame Garage
24.Frame Shed
25.Frame Bay Wind
26.1SFr Overhang
27.Unfin Basement
28.Unfinished Att
29.Finished Attic

Map Lot 008-011 Account 144 Location 360 TABOR ROAD Card 1 Of 1 8/23/2023

HEWITT, GARY L JR
HEWITT, LINDA A
P.O. BOX 384
WASHBURN ME 04786

B4316P229 B4316P231

Previous Owner
Bishop, Philip
Bishop, Sheila M.
P.O. Box 309
Washburn ME
Sale Date: 7/28/2006

Inspection Witnessed By:

X Date

No./Date	Description	Date Insp.

Notes:
*2-18-2019 Check for completion of garage for 2019.
Assessed at 40% complete at time of reval.

Washburn

Property Data

Neighborhood **1 Neighborhood One**

Tree Growth Year **0**

1ST MORTGAGE **0**

2ND MORTGAGE **0**

Zone/Land Use **1 Residential**

Secondary Zone

Topography **2 Rolling**

1.Level	4.Below St	7.LevelBog
2.Rolling	5.Low	8.
3.Above St	6.Swampy	9.

Utilities **4 Drilled Well** **6 Septic System**

1.Public	4.Dr Well	7.Cesspool
2.Water	5.Dug Well	8.
3.Sewer	6.Septic	9.None

Street **1 Paved**

1.Paved	4.Proposed	7.
2.Semi Imp	5.R/O/W	8.
3.Gravel	6.	9.None

TG PLAN YEAR **0**

Tif District # **0**

Sale Data

Sale Date **7/28/2006**

Price **67,000**

Sale Type **2 Land & Buildings**

1.Land	4.Mobile	7.C/I L&B
2.L & B	5.Other	8.
3.Building	6.C/I Land	9.

Financing **1 Conventional**

1.Convent	4.Seller	7.
2.FHA/VA	5.Private	8.
3.Assumed	6.Cash	9.Unknown

Validity **1 Arms Length Sale**

1.Valid	4.Split	7.Renovate
2.Related	5.Partial	8.Other
3.Distress	6.Exempt	9.

Verified **5 Public Record**

1.Buyer	4.Agent	7.Family
2.Seller	5.Pub Rec	8.Other
3.Lender	6.MLS	9.

Assessment Record

Year	Land	Buildings	Exempt	Total
2012	5,000	31,500	8,800	27,700
2013	6,500	31,500	8,800	29,200
2015	6,500	31,500	9,000	29,000
2018	6,500	31,500	18,400	19,600
2019	14,000	53,600	20,000	47,600
2020	14,000	53,500	25,000	42,500
2021	14,000	53,600	25,000	42,600
2022	14,000	56,200	25,000	45,200
2023	18,700	67,000	25,000	60,700

Land Data

Front Foot	Type	Effective Frontage	Effective Depth	Influence Factor	Influence Code
11.Regular Lot				%	
12.Delta Triangle				%	
13.Nabla Triangle				%	
14.Rear Land				%	
15.Class I Road				%	
				%	
				%	
Square Foot		**Square Feet**			
16.Class II Road				%	
17.Municipal Rese				%	
18.Munic Sep Lago				%	
19.Gravel Pit				%	
20.Industrial Bas				%	
				%	
				%	
Fract. Acre		**Acreage/Sites**			
21.Developed Pave	21	0.72		100 %	0
22.Undev Paved (F				%	
23.Developed Grav				%	
Acres				%	
24.Undev Gravel (				%	
25.Comm Base Pave				%	
26.Comm Base Grav				%	
27.Backlot				%	
28.Rear Land				%	
29.Pavement				%	

Total Acreage 0.72

Influence Codes

1.Unimproved
2.Excess Frtg
3.Topography
4.Size/Shape
5.Access
6.Restriction
7.Open Space
8.View/Environ
9.Fract Share
Acres
30.Utility R O W
31.Tillable
32.Pasture
33.Orchard
34.Softwood F&O
35.Mixed Wood F&O
36.Hardwood F&O
37.Softwood TG
38.Mixed Wood TG
39.Hardwood TG
40.Wasteland
41.Open Space
42.Mobile Home Si
43.Condo Site
44.Lot Improvemen
45.Subdivision Lo
46.Heavy Ind Sit

Washburn

Map Lot 008-011 | Account 144 | Location 360 TABOR ROAD | Card 1 Of 1 | 8/23/2023

Building Style	**2 Ranch**		
1.Conv.	5.Garrison	9.Gambrel	
2.Ranch	6.Salt Box	10.Other	
3.R Ranch	7.Contemp	11.Split	
4.Cape	8.Log	12.	
Dwelling Units	**1**		
Other Units	**0**		
Stories	**1 One Story**		
1.1	4.1.5	7.	
2.2	5.1.75	8.	
3.3	6.2.5	9.	
Exterior Walls	**2 Vinyl/Aluminum**		
1.Wood	5.Stucco	9.T-111	
2.Vin/Al	6.Brick	10.Other	
3.Compos.	7.Stone	11.	
4.Asbestos	8.Concrete	12.	
Roof Surface	**1 Asphalt Shingles**		
1.Asphalt	4.Composit	7.	
2.Slate	5.Wood	8.	
3.Metal	6.Other	9.	
SF Masonry Trim	**0**		
OPEN-3-CUSTOM	**0**		
OPEN-4-CUSTOM	**0**		
Year Built	**1970**		
Year Remodeled	**0**		
Foundation	**1 Concrete**		
1.Concrete	4.Wood	7.	
2.C Block	5.Slab	8.	
3.Br/Stone	6.Piers	9.	
Basement	**4 Full Basement**		
1.1/4 Bmt	4.Full Bmt	7.	
2.1/2 Bmt	5.None	8.	
3.3/4 Bmt	6.	9.None	
Bsmt Gar # Cars	**0**		
Wet Basement	**2 Damp Basement**		
1.Dry	4.	7.	
2.Damp	5.	8.	
3.Wet	6.	9.	

SF Bsmt Living	**0**		
Fin Bsmt Grade	**0 0**		
OPEN 5 OPTIONAL	**0**		
Heat Type	**100%**	**9 Not Heated**	
1.HWBB	5.FWA	9.No Heat	
2.HWCI	6.GravWA	10.	
3.H Pump	7.Electric	11.	
4.Steam	8.Fl/Wall	12.	
Cool Type	**0%**	**9 None**	
1.Refrig	4.W&C Air	7.	
2.Evapor	5.	8.	
3.H Pump	6.	9.None	
Kitchen Style	**2 Typical**		
1.Modern	4.Obsolete	7.	
2.Typical	5.	8.	
3.Old Type	6.	9.None	
Bath(s) Style	**2 Typical Bath(s)**		
1.Modern	4.Obsolete	7.	
2.Typical	5.	8.	
3.Old Type	6.	9.None	
# Rooms	**7**		
# Bedrooms	**3**		
# Full Baths	**1**		
# Half Baths	**0**		
# Addn Fixtures	**0**		
# Fireplaces	**0**		

TRIO Software
A Division of Harris Computer Systems

Layout	**1 Typical**		
1.Typical	4.	7.	
2.Inadeq	5.	8.	
3.Poor	6.	9.	
Attic	**9 None**		
1.1/4 Fin	4.Full Fin	7.	
2.1/2 Fin	5.Fl/Stair	8.	
3.3/4 Fin	6.	9.None	
Insulation	**1 Full**		
1.Full	4.Minimal	7.	
2.Heavy	5.Partial	8.	
3.Capped	6.	9.None	
Unfinished %	**0%**		
Grade & Factor	**3 Average 90%**		
1.E Grade	4.B Grade	7.	
2.D Grade	5.A Grade	8.SC Grade	
3.C Grade	6.AA Grade	9.Same	
SQFT (Footprint)	**580**		
Condition	**3 Below Average**		
1.Poor	4.Avg	7.V G	
2.Fair	5.Avg+	8.Exc	
3.Avg-	6.Good	9.Same	
Phys. % Good	**0%**		
Funct. % Good	**100%**		
Functional Code	**9 None**		
1.Incomp	4.Delap	7.No Power	
2.O-Built	5.Bsmt	8.LongTerm	
3.Damage	6.Common	9.None	
Econ. % Good	**100%**		
Economic Code	**None**		
0.None	3.No Power	7.	
1.Location	4.Generate	8.	
2.Encroach	9.None	9.	
Entrance Code	**1 Interior Inspect**		
1.Interior	4.Vacant	7.	
2.Refusal	5.Estimate	8.	
3.Informed	6.Reviewed	9.	
Information Code	**1 Owner**		
1.Owner	4.Agent	7.	
2.Relative	5.Estimate	8.	
3.Tenant	6.Other	9.	

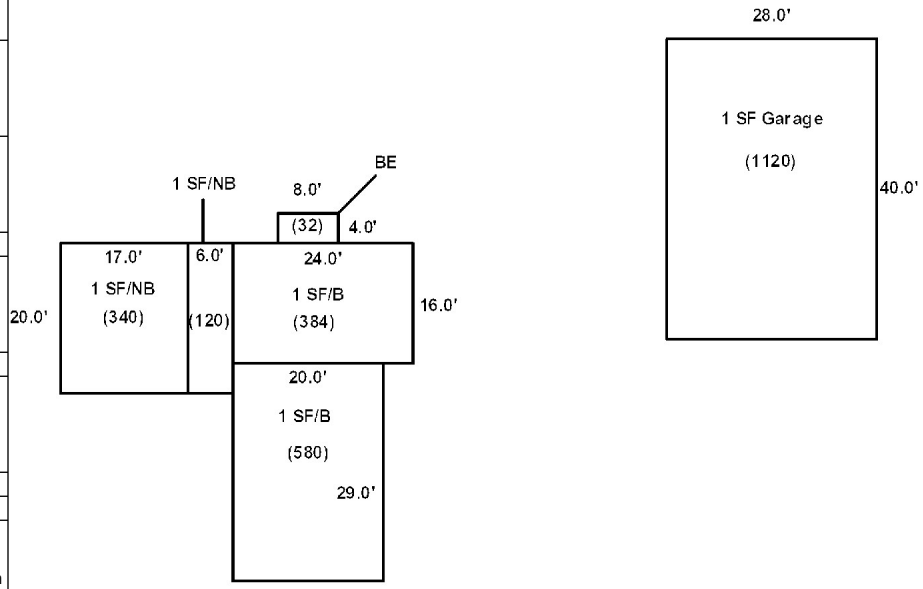

Date Inspected 10/18/2018

Additions, Outbuildings & Improvements

Type	Year	Units	Grade	Cond	Phys.	Funct.	Sound Value
20 1 Story/Bsmt	1970	384	9 100	9	0 %	100 %	
1 One Story Frame	1970	120	2 115	3	0 %	100 %	
1 One Story Frame	1975	340	2 110	2	0 %	100 %	
40 Basement Entry	1970	32	2 100	3	0 %	100 %	
23 Frame Garage	2018	1120	3 100	4	0 %	40 %	
					%	%	
					%	%	
					%	%	
					%	%	
					%	%	

1.One Story Fram
2.Two Story Fram
3.Three Story Fr
4.1 & 1/2 Story
5.1 & 3/4 Story
6.2 & 1/2 Story
21.Open Frame Por
22.Encl Frame Por
23.Frame Garage
24.Frame Shed
25.Frame Bay Wind
26.1SFr Overhang
27.Unfin Basement
28.Unfinished Att
29.Finished Attic

Map Lot 008-012 Account 156 Location TABOR ROAD Card 1 Of 1 8/23/2023

TURNER, CYNTHIA
TURNER, HEIRS OF DALE A.
30 TABOR RD
WASHBURN ME 04786

B1317P51 B3648P188 B5134P148

Inspection Witnessed By:

X Date

No./Date	Description	Date Insp.

Notes:

Washburn

Property Data

Neighborhood **1 Neighborhood One**

Tree Growth Year **0**

1ST MORTGAGE **0**

2ND MORTGAGE **0**

Zone/Land Use **1 Residential**

Secondary Zone

Topography **1 Level**

1.Level	4.Below St	7.LevelBog
2.Rolling	5.Low	8.
3.Above St	6.Swampy	9.

Utilities

1.Public	4.Dr Well	7.Cesspool
2.Water	5.Dug Well	8.
3.Sewer	6.Septic	9.None

Street **1 Paved**

1.Paved	4.Proposed	7.
2.Semi Imp	5.R/O/W	8.
3.Gravel	6.	9.None

TG PLAN YEAR **0**

Tif District # **0**

Sale Data

Sale Date

Price

Sale Type **1 Land Only**

1.Land	4.Mobile	7.C/I L&B
2.L & B	5.Other	8.
3.Building	6.C/I Land	9.

Financing **1 Conventional**

1.Convent	4.Seller	7.
2.FHA/VA	5.Private	8.
3.Assumed	6.Cash	9.Unknown

Validity **2 Related Parties**

1.Valid	4.Split	7.Renovate
2.Related	5.Partial	8.Other
3.Distress	6.Exempt	9.

Verified **5 Public Record**

1.Buyer	4.Agent	7.Family
2.Seller	5.Pub Rec	8.Other
3.Lender	6.MLS	9.

Assessment Record

Year	Land	Buildings	Exempt	Total
2012	24,000	0	0	24,000
2013	31,200	0	0	31,200
2015	31,200	0	0	31,200
2018	31,200	0	0	31,200
2019	56,000	0	0	56,000
2020	56,000	0	0	56,000
2021	56,000	0	0	56,000
2022	56,000	0	0	56,000
2023	58,600	0	0	58,600

Land Data

Front Foot	Type	Effective Frontage	Effective Depth	Influence Factor	Influence Code
11.Regular Lot				%	
12.Delta Triangle				%	
13.Nabla Triangle				%	
14.Rear Land				%	
15.Class I Road				%	
				%	
				%	
Square Foot		**Square Feet**			
16.Class II Road				%	
17.Municipal Rese				%	
18.Munic Sep Lago				%	
19.Gravel Pit				%	
20.Industrial Bas				%	
				%	
				%	
Fract. Acre		**Acreage/Sites**			
21.Developed Pave	28	32.00	100	%	0
22.Undev Paved (F	31	40.00	100	%	0
23.Developed Grav				%	
Acres				%	
24.Undev Gravel (				%	
25.Comm Base Pave				%	
26.Comm Base Grav				%	
27.Backlot				%	
28.Rear Land				%	
29.Pavement				%	

Total Acreage 72.00

Influence Codes

1.Unimproved
2.Excess Frtg
3.Topography
4.Size/Shape
5.Access
6.Restriction
7.Open Space
8.View/Environ
9.Fract Share
Acres
30.Utility R O W
31.Tillable
32.Pasture
33.Orchard
34.Softwood F&O
35.Mixed Wood F&O
36.Hardwood F&O
37.Softwood TG
38.Mixed Wood TG
39.Hardwood TG
40.Wasteland
41.Open Space
42.Mobile Home Si
43.Condo Site
44.Lot Improvemen
45.Subdivision Lo
46.Heavy Ind Sit

Washburn

Map Lot 008-012 | Account 156 | Location TABOR ROAD | Card 1 Of 1 | 8/23/2023

Building Style **0**		
1.Conv.	5.Garrison	9.Gambrel
2.Ranch	6.Salt Box	10.Other
3.R Ranch	7.Contemp	11.Split
4.Cape	8.Log	12.
Dwelling Units **0**		
Other Units **0**		
Stories **0**		
1.1	4.1.5	7.
2.2	5.1.75	8.
3.3	6.2.5	9.
Exterior Walls **0**		
1.Wood	5.Stucco	9.T-111
2.Vin/Al	6.Brick	10.Other
3.Compos.	7.Stone	11.
4.Asbestos	8.Concrete	12.
Roof Surface **0**		
1.Asphalt	4.Composit	7.
2.Slate	5.Wood	8.
3.Metal	6.Other	9.
SF Masonry Trim **0**		
OPEN-3-CUSTOM **0**		
OPEN-4-CUSTOM **0**		
Year Built **0**		
Year Remodeled **0**		
Foundation **0**		
1.Concrete	4.Wood	7.
2.C Block	5.Slab	8.
3.Br/Stone	6.Piers	9.
Basement **0**		
1.1/4 Bmt	4.Full Bmt	7.
2.1/2 Bmt	5.None	8.
3.3/4 Bmt	6.	9.None
Bsmt Gar # Cars **0**		
Wet Basement **0**		
1.Dry	4.	7.
2.Damp	5.	8.
3.Wet	6.	9.

SF Bsmt Living **0**		
Fin Bsmt Grade **0 0**		
OPEN 5 OPTIONAL **0**		
Heat Type **100%** **0**		
1.HWBB	5.FWA	9.No Heat
2.HWCI	6.GravWA	10.
3.H Pump	7.Electric	11.
4.Steam	8.Fl/Wall	12.
Cool Type **0%** **9 None**		
1.Refrig	4.W&C Air	7.
2.Evapor	5.	8.
3.H Pump	6.	9.None
Kitchen Style **0**		
1.Modern	4.Obsolete	7.
2.Typical	5.	8.
3.Old Type	6.	9.None
Bath(s) Style **0**		
1.Modern	4.Obsolete	7.
2.Typical	5.	8.
3.Old Type	6.	9.None
# Rooms **0**		
# Bedrooms **0**		
# Full Baths **0**		
# Half Baths **0**		
# Addn Fixtures **0**		
# Fireplaces **0**		

TRIO Software
A Division of Harris Computer Systems

Layout **0**		
1.Typical	4.	7.
2.Inadeq	5.	8.
3.Poor	6.	9.
Attic **0**		
1.1/4 Fin	4.Full Fin	7.
2.1/2 Fin	5.Fl/Stair	8.
3.3/4 Fin	6.	9.None
Insulation **0**		
1.Full	4.Minimal	7.
2.Heavy	5.Partial	8.
3.Capped	6.	9.None
Unfinished % **0%**		
Grade & Factor **0 0%**		
1.E Grade	4.B Grade	7.
2.D Grade	5.A Grade	8.SC Grade
3.C Grade	6.AA Grade	9.Same
SQFT (Footprint) **0**		
Condition **0**		
1.Poor	4.Avg	7.V G
2.Fair	5.Avg+	8.Exc
3.Avg-	6.Good	9.Same
Phys. % Good **0%**		
Funct. % Good **100%**		
Functional Code **9 None**		
1.Incomp	4.Delap	7.No Power
2.O-Built	5.Bsmt	8.LongTerm
3.Damage	6.Common	9.None
Econ. % Good **100%**		
Economic Code **None**		
0.None	3.No Power	7.
1.Location	4.Generate	8.
2.Encroach	9.None	9.
Entrance Code **0**		
1.Interior	4.Vacant	7.
2.Refusal	5.Estimate	8.
3.Informed	6.Reviewed	9.
Information Code **0**		
1.Owner	4.Agent	7.
2.Relative	5.Estimate	8.
3.Tenant	6.Other	9.

Date Inspected

Additions, Outbuildings & Improvements

Type	Year	Units	Grade	Cond	Phys.	Funct.	Sound Value
					%	%	
					%	%	
					%	%	
					%	%	
					%	%	
					%	%	
					%	%	
					%	%	
					%	%	
					%	%	

1.One Story Fram
2.Two Story Fram
3.Three Story Fr
4.1 & 1/2 Story
5.1 & 3/4 Story
6.2 & 1/2 Story
21.Open Frame Por
22.Encl Frame Por
23.Frame Garage
24.Frame Shed
25.Frame Bay Wind
26.1SFr Overhang
27.Unfin Basement
28.Unfinished Att
29.Finished Attic

Map Lot 008-013 Account 801 Location 416 TABOR ROAD Card 1 Of 1 8/23/2023

SANDS, FERN A
416 TABOR ROAD
WASHBURN ME 04786

B1813P340

Property Data

Neighborhood	**1 Neighborhood One**
Tree Growth Year	**0**
1ST MORTGAGE	**0**
2ND MORTGAGE	**0**
Zone/Land Use	**1 Residential**
Secondary Zone	
Topography	**1 Level**

1.Level	4.Below St	7.LevelBog
2.Rolling	5.Low	8.
3.Above St	6.Swampy	9.

Utilities **4 Drilled Well** **6 Septic System**

1.Public	4.Dr Well	7.Cesspool
2.Water	5.Dug Well	8.
3.Sewer	6.Septic	9.None

Street **1 Paved**

1.Paved	4.Proposed	7.
2.Semi Imp	5.R/O/W	8.
3.Gravel	6.	9.None

TG PLAN YEAR	**0**
Tif District #	**0**

Sale Data

Sale Date	**6/13/1985**
Price	
Sale Type	**2 Land & Buildings**

1.Land	4.Mobile	7.C/I L&B
2.L & B	5.Other	8.
3.Building	6.C/I Land	9.

Financing

1.Convent	4.Seller	7.
2.FHA/VA	5.Private	8.
3.Assumed	6.Cash	9.Unknown

Validity **2 Related Parties**

1.Valid	4.Split	7.Renovate
2.Related	5.Partial	8.Other
3.Distress	6.Exempt	9.

Verified **5 Public Record**

1.Buyer	4.Agent	7.Family
2.Seller	5.Pub Rec	8.Other
3.Lender	6.MLS	9.

Assessment Record

Year	Land	Buildings	Exempt	Total
2012	5,900	59,400	8,800	56,500
2013	7,600	59,400	8,800	58,200
2015	7,600	59,400	9,000	58,000
2018	7,600	59,400	18,400	48,600
2019	18,800	70,100	20,000	68,900
2020	18,800	69,200	25,000	63,000
2021	18,800	70,100	25,000	63,900
2022	18,800	73,600	25,000	67,400
2023	24,300	87,600	25,000	86,900

Land Data

Front Foot	Type	Effective Frontage	Effective Depth	Influence Factor	Influence Code
11.Regular Lot				%	
12.Delta Triangle				%	
13.Nabla Triangle				%	
14.Rear Land				%	
15.Class I Road				%	
				%	
				%	
Square Foot		**Square Feet**			
16.Class II Road	29	1,200		75 %	0
17.Municipal Rese				%	
18.Munic Sep Lago				%	
19.Gravel Pit				%	
20.Industrial Bas				%	
				%	
				%	
Fract. Acre		**Acreage/Sites**			
21.Developed Pave	21	1.00		100 %	0
22.Undev Paved (F				%	
23.Developed Grav				%	
Acres				%	
24.Undev Gravel (				%	
25.Comm Base Pave				%	
26.Comm Base Grav				%	
27.Backlot				%	
28.Rear Land				%	
29.Pavement				%	

Total Acreage 1.00

Influence Codes

1.Unimproved
2.Excess Frtg
3.Topography
4.Size/Shape
5.Access
6.Restriction
7.Open Space
8.View/Environ
9.Fract Share

Acres

30.Utility R O W
31.Tillable
32.Pasture
33.Orchard
34.Softwood F&O
35.Mixed Wood F&O
36.Hardwood F&O
37.Softwood TG
38.Mixed Wood TG
39.Hardwood TG
40.Wasteland
41.Open Space
42.Mobile Home Si
43.Condo Site
44.Lot Improvemen
45.Subdivision Lo
46.Heavy Ind Sit

Inspection Witnessed By:

X Date

No./Date	Description	Date Insp.

Notes:
*2-18-2019 -20% for attached garage.

Washburn

Washburn

Map Lot 008-013 | Account 801 | Location 416 TABOR ROAD | Card 1 Of 1 | 8/23/2023

Building Style	**2 Ranch**		
1.Conv.	5.Garrison	9.Gambrel	
2.Ranch	6.Salt Box	10.Other	
3.R Ranch	7.Contemp	11.Split	
4.Cape	8.Log	12.	
Dwelling Units	**1**		
Other Units	**0**		
Stories	**1 One Story**		
1.1	4.1.5	7.	
2.2	5.1.75	8.	
3.3	6.2.5	9.	
Exterior Walls	**2 Vinyl/Aluminum**		
1.Wood	5.Stucco	9.T-111	
2.Vin/Al	6.Brick	10.Other	
3.Compos.	7.Stone	11.	
4.Asbestos	8.Concrete	12.	
Roof Surface	**1 Asphalt Shingles**		
1.Asphalt	4.Composit	7.	
2.Slate	5.Wood	8.	
3.Metal	6.Other	9.	
SF Masonry Trim	**0**		
OPEN-3-CUSTOM	**0**		
OPEN-4-CUSTOM	**0**		
Year Built	**1973**		
Year Remodeled	**0**		
Foundation	**1 Concrete**		
1.Concrete	4.Wood	7.	
2.C Block	5.Slab	8.	
3.Br/Stone	6.Piers	9.	
Basement	**4 Full Basement**		
1.1/4 Bmt	4.Full Bmt	7.	
2.1/2 Bmt	5.None	8.	
3.3/4 Bmt	6.	9.None	
Bsmt Gar # Cars	**0**		
Wet Basement	**2 Damp Basement**		
1.Dry	4.	7.	
2.Damp	5.	8.	
3.Wet	6.	9.	

SF Bsmt Living	**0**		
Fin Bsmt Grade	**0 0**		
OPEN 5 OPTIONAL	**0**		
Heat Type	**100%**	**5 Forced Warm Air**	
1.HWBB	5.FWA	9.No Heat	
2.HWCI	6.GravWA	10.	
3.H Pump	7.Electric	11.	
4.Steam	8.Fl/Wall	12.	
Cool Type	**0%**	**9 None**	
1.Refrig	4.W&C Air	7.	
2.Evapor	5.	8.	
3.H Pump	6.	9.None	
Kitchen Style	**2 Typical**		
1.Modern	4.Obsolete	7.	
2.Typical	5.	8.	
3.Old Type	6.	9.None	
Bath(s) Style	**2 Typical Bath(s)**		
1.Modern	4.Obsolete	7.	
2.Typical	5.	8.	
3.Old Type	6.	9.None	
# Rooms	**5**		
# Bedrooms	**3**		
# Full Baths	**1**		
# Half Baths	**0**		
# Addn Fixtures	**0**		
# Fireplaces	**0**		

TRIO Software
A Division of Harris Computer Systems

Layout	**1 Typical**		
1.Typical	4.	7.	
2.Inadeq	5.	8.	
3.Poor	6.	9.	
Attic	**9 None**		
1.1/4 Fin	4.Full Fin	7.	
2.1/2 Fin	5.Fl/Stair	8.	
3.3/4 Fin	6.	9.None	
Insulation	**1 Full**		
1.Full	4.Minimal	7.	
2.Heavy	5.Partial	8.	
3.Capped	6.	9.None	
Unfinished %	**0%**		
Grade & Factor	**3 Average 100%**		
1.E Grade	4.B Grade	7.	
2.D Grade	5.A Grade	8.SC Grade	
3.C Grade	6.AA Grade	9.Same	
SQFT (Footprint)	**1196**		
Condition	**5 Above Average**		
1.Poor	4.Avg	7.V G	
2.Fair	5.Avg+	8.Exc	
3.Avg-	6.Good	9.Same	
Phys. % Good	**0%**		
Funct. % Good	**100%**		
Functional Code	**9 None**		
1.Incomp	4.Delap	7.No Power	
2.O-Built	5.Bsmt	8.LongTerm	
3.Damage	6.Common	9.None	
Econ. % Good	**100%**		
Economic Code	**None**		
0.None	3.No Power	7.	
1.Location	4.Generate	8.	
2.Encroach	9.None	9.	
Entrance Code	**1 Interior Inspect**		
1.Interior	4.Vacant	7.	
2.Refusal	5.Estimate	8.	
3.Informed	6.Reviewed	9.	
Information Code	**1 Owner**		
1.Owner	4.Agent	7.	
2.Relative	5.Estimate	8.	
3.Tenant	6.Other	9.	

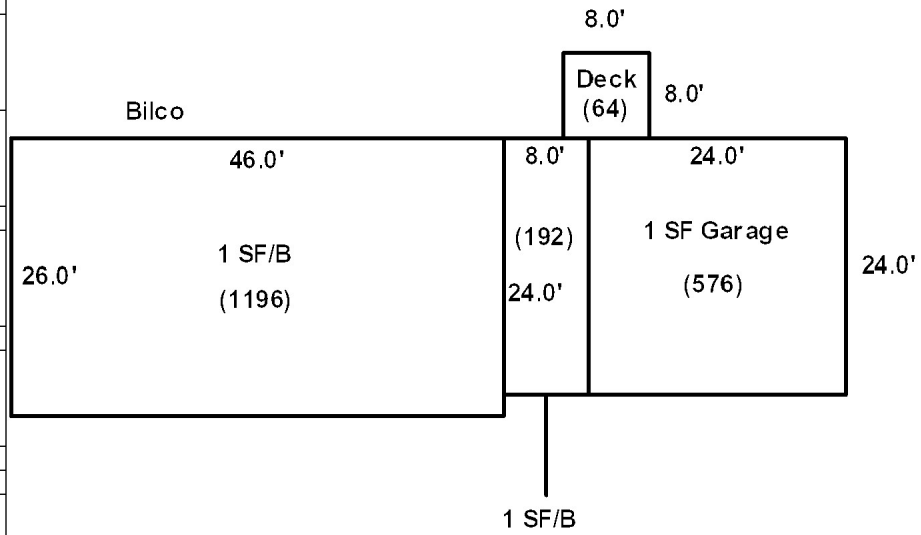

Date Inspected 10/18/2018

Additions, Outbuildings & Improvements

Type	Year	Units	Grade	Cond	Phys.	Funct.	Sound Value
20 1 Story/Bsmt	1973	192	9 100	9	0 %	100 %	
68 Wood Deck	1990	64	2 100	3	0 %	100 %	
23 Frame Garage	1973	576	3 95	4	0 %	80 %	
					%	%	
					%	%	
					%	%	
					%	%	
					%	%	
					%	%	
					%	%	

1.One Story Fram
2.Two Story Fram
3.Three Story Fr
4.1 & 1/2 Story
5.1 & 3/4 Story
6.2 & 1/2 Story
21.Open Frame Por
22.Encl Frame Por
23.Frame Garage
24.Frame Shed
25.Frame Bay Wind
26.1SFr Overhang
27.Unfin Basement
28.Unfinished Att
29.Finished Attic

Map Lot 008-014 Account 1082 Location TABOR ROAD Card 1 Of 1 8/23/2023

ATCHESON, THOMAS J
522 CARSON ROAD
WOODLAND ME 04736

B3603P96

Property Data

Neighborhood **1 Neighborhood One**

Tree Growth Year **0**

1ST MORTGAGE **0**

2ND MORTGAGE **0**

Zone/Land Use **1 Residential**

Secondary Zone

Topography **2 Rolling**

1.Level	4.Below St	7.LevelBog
2.Rolling	5.Low	8.
3.Above St	6.Swampy	9.

Utilities

1.Public	4.Dr Well	7.Cesspool
2.Water	5.Dug Well	8.
3.Sewer	6.Septic	9.None

Street **1 Paved**

1.Paved	4.Proposed	7.
2.Semi Imp	5.R/O/W	8.
3.Gravel	6.	9.None

TG PLAN YEAR **0**

Tif District # **0**

Sale Data

Sale Date **12/27/2001**

Price

Sale Type **1 Land Only**

1.Land	4.Mobile	7.C/I L&B
2.L & B	5.Other	8.
3.Building	6.C/I Land	9.

Financing

1.Convent	4.Seller	7.
2.FHA/VA	5.Private	8.
3.Assumed	6.Cash	9.Unknown

Validity **1 Arms Length Sale**

1.Valid	4.Split	7.Renovate
2.Related	5.Partial	8.Other
3.Distress	6.Exempt	9.

Verified **5 Public Record**

1.Buyer	4.Agent	7.Family
2.Seller	5.Pub Rec	8.Other
3.Lender	6.MLS	9.

Assessment Record

Year	Land	Buildings	Exempt	Total
2012	43,200	0	0	43,200
2013	56,200	0	0	56,200
2015	56,200	0	0	56,200
2018	56,200	0	0	56,200
2019	103,000	0	0	103,000
2020	103,000	0	0	103,000
2021	103,000	0	0	103,000
2022	103,000	0	0	103,000
2023	106,200	0	0	106,200

Land Data

Front Foot	Type	Effective Frontage	Effective Depth	Influence Factor	Influence Code
11.Regular Lot				%	
12.Delta Triangle				%	
13.Nabla Triangle				%	
14.Rear Land				%	
15.Class I Road				%	
				%	
				%	
Square Foot		**Square Feet**			
16.Class II Road				%	
17.Municipal Rese				%	
18.Munic Sep Lago				%	
19.Gravel Pit				%	
20.Industrial Bas				%	
				%	
				%	
Fract. Acre		**Acreage/Sites**			
21.Developed Pave	31	83.00	100	%	0
22.Undev Paved (F	28	40.00	100	%	0
23.Developed Grav				%	
Acres				%	
24.Undev Gravel (				%	
25.Comm Base Pave				%	
26.Comm Base Grav				%	
27.Backlot				%	
28.Rear Land				%	
29.Pavement				%	

Total Acreage 123.00

Influence Codes

1.Unimproved
2.Excess Frtg
3.Topography
4.Size/Shape
5.Access
6.Restriction
7.Open Space
8.View/Environ
9.Fract Share
Acres
30.Utility R O W
31.Tillable
32.Pasture
33.Orchard
34.Softwood F&O
35.Mixed Wood F&O
36.Hardwood F&O
37.Softwood TG
38.Mixed Wood TG
39.Hardwood TG
40.Wasteland
41.Open Space
42.Mobile Home Si
43.Condo Site
44.Lot Improvemen
45.Subdivision Lo
46.Heavy Ind Sit

Inspection Witnessed By:

X Date

No./Date	Description	Date Insp.

Notes:

Washburn

Washburn

Map Lot 008-014 | Account 1082 | Location TABOR ROAD | Card 1 Of 1 | 8/23/2023

Building Style **0**		
1.Conv.	5.Garrison	9.Gambrel
2.Ranch	6.Salt Box	10.Other
3.R Ranch	7.Contemp	11.Split
4.Cape	8.Log	12.
Dwelling Units **0**		
Other Units **0**		
Stories **0**		
1.1	4.1.5	7.
2.2	5.1.75	8.
3.3	6.2.5	9.
Exterior Walls **0**		
1.Wood	5.Stucco	9.T-111
2.Vin/Al	6.Brick	10.Other
3.Compos.	7.Stone	11.
4.Asbestos	8.Concrete	12.
Roof Surface **0**		
1.Asphalt	4.Composit	7.
2.Slate	5.Wood	8.
3.Metal	6.Other	9.
SF Masonry Trim **0**		
OPEN-3-CUSTOM **0**		
OPEN-4-CUSTOM **0**		
Year Built **0**		
Year Remodeled **0**		
Foundation **0**		
1.Concrete	4.Wood	7.
2.C Block	5.Slab	8.
3.Br/Stone	6.Piers	9.
Basement **0**		
1.1/4 Bmt	4.Full Bmt	7.
2.1/2 Bmt	5.None	8.
3.3/4 Bmt	6.	9.None
Bsmt Gar # Cars **0**		
Wet Basement **0**		
1.Dry	4.	7.
2.Damp	5.	8.
3.Wet	6.	9.

SF Bsmt Living **0**		
Fin Bsmt Grade **0 0**		
OPEN 5 OPTIONAL **0**		
Heat Type **100%** **0**		
1.HWBB	5.FWA	9.No Heat
2.HWCI	6.GravWA	10.
3.H Pump	7.Electric	11.
4.Steam	8.Fl/Wall	12.
Cool Type **0%** **9 None**		
1.Refrig	4.W&C Air	7.
2.Evapor	5.	8.
3.H Pump	6.	9.None
Kitchen Style **0**		
1.Modern	4.Obsolete	7.
2.Typical	5.	8.
3.Old Type	6.	9.None
Bath(s) Style **0**		
1.Modern	4.Obsolete	7.
2.Typical	5.	8.
3.Old Type	6.	9.None
# Rooms **0**		
# Bedrooms **0**		
# Full Baths **0**		
# Half Baths **0**		
# Addn Fixtures **0**		
# Fireplaces **0**		

TRIO Software
A Division of Harris Computer Systems

Layout **0**		
1.Typical	4.	7.
2.Inadeq	5.	8.
3.Poor	6.	9.
Attic **0**		
1.1/4 Fin	4.Full Fin	7.
2.1/2 Fin	5.Fl/Stair	8.
3.3/4 Fin	6.	9.None
Insulation **0**		
1.Full	4.Minimal	7.
2.Heavy	5.Partial	8.
3.Capped	6.	9.None
Unfinished % **0%**		
Grade & Factor **0 0%**		
1.E Grade	4.B Grade	7.
2.D Grade	5.A Grade	8.SC Grade
3.C Grade	6.AA Grade	9.Same
SQFT (Footprint) **0**		
Condition **0**		
1.Poor	4.Avg	7.V G
2.Fair	5.Avg+	8.Exc
3.Avg-	6.Good	9.Same
Phys. % Good **0%**		
Funct. % Good **100%**		
Functional Code **9 None**		
1.Incomp	4.Delap	7.No Power
2.O-Built	5.Bsmt	8.LongTerm
3.Damage	6.Common	9.None
Econ. % Good **100%**		
Economic Code **None**		
0.None	3.No Power	7.
1.Location	4.Generate	8.
2.Encroach	9.None	9.
Entrance Code **0**		
1.Interior	4.Vacant	7.
2.Refusal	5.Estimate	8.
3.Informed	6.Reviewed	9.
Information Code **0**		
1.Owner	4.Agent	7.
2.Relative	5.Estimate	8.
3.Tenant	6.Other	9.

Date Inspected

Additions, Outbuildings & Improvements

Type	Year	Units	Grade	Cond	Phys.	Funct.	Sound Value
					%	%	
					%	%	
					%	%	
					%	%	
					%	%	
					%	%	
					%	%	
					%	%	
					%	%	
					%	%	

1.One Story Fram
2.Two Story Fram
3.Three Story Fr
4.1 & 1/2 Story
5.1 & 3/4 Story
6.2 & 1/2 Story
21.Open Frame Por
22.Encl Frame Por
23.Frame Garage
24.Frame Shed
25.Frame Bay Wind
26.1SFr Overhang
27.Unfin Basement
28.Unfinished Att
29.Finished Attic

Map Lot 008-014A | Account 216 | Location 456 Tabor Road | Card 1 Of 1 | 8/23/2023

Clayton, Marty A
Clayton, Kim M
456 Tabor Road
Washburn ME 04786

B3602P223 B5056P294

Inspection Witnessed By:

X Date

No./Date	Description	Date Insp.

Notes:

*1-3-2019 Entire upstairs does not get used, does not have heat and has unfinished walls and flooring. Assessed at 70% functional at time of reval. -20% for attached garage. -15% for size obs on 4 bay garage and for size obs on 1.5 SF barn. -15% for size obs on 1 SF Barn as well as -35% for delap. -20% for attached shed. suptracted 10% lot value for dug well and cesspool 1sf barn with att shed assessed at no value at time of reval.

Washburn

Property Data

Neighborhood **1 Neighborhood One**

Tree Growth Year **0**

1ST MORTGAGE **0**

2ND MORTGAGE **0**

Zone/Land Use **1 Residential**

Secondary Zone

Topography **2 Rolling**

1.Level	4.Below St	7.LevelBog
2.Rolling	5.Low	8.
3.Above St	6.Swampy	9.

Utilities **5 Dug Well** **7 Cesspool**

1.Public	4.Dr Well	7.Cesspool
2.Water	5.Dug Well	8.
3.Sewer	6.Septic	9.None

Street **1 Paved**

1.Paved	4.Proposed	7.
2.Semi Imp	5.R/O/W	8.
3.Gravel	6.	9.None

TG PLAN YEAR **0**

Tif District # **0**

Sale Data

Sale Date

Price

Sale Type **2 Land & Buildings**

1.Land	4.Mobile	7.C/I L&B
2.L & B	5.Other	8.
3.Building	6.C/I Land	9.

Financing **1 Conventional**

1.Convent	4.Seller	7.
2.FHA/VA	5.Private	8.
3.Assumed	6.Cash	9.Unknown

Validity **1 Arms Length Sale**

1.Valid	4.Split	7.Renovate
2.Related	5.Partial	8.Other
3.Distress	6.Exempt	9.

Verified **5 Public Record**

1.Buyer	4.Agent	7.Family
2.Seller	5.Pub Rec	8.Other
3.Lender	6.MLS	9.

Assessment Record

Year	Land	Buildings	Exempt	Total
2012	9,500	54,300	8,800	55,000
2013	12,400	54,300	8,800	57,900
2015	12,400	54,300	9,000	57,700
2018	12,400	54,300	18,400	48,300
2019	25,000	93,500	20,000	98,500
2020	25,000	93,400	25,000	93,400
2021	25,000	93,500	25,000	93,500
2022	25,000	98,100	25,000	98,100
2023	29,900	116,700	25,000	121,600

Land Data

Front Foot	Type	Effective Frontage	Effective Depth	Influence Factor	Influence Code
11.Regular Lot				%	
12.Delta Triangle				%	
13.Nabla Triangle				%	
14.Rear Land				%	
15.Class I Road				%	
				%	
				%	
Square Foot		**Square Feet**			
16.Class II Road				%	
17.Municipal Rese				%	
18.Munic Sep Lago				%	
19.Gravel Pit				%	
20.Industrial Bas				%	
				%	
				%	
Fract. Acre		**Acreage/Sites**			
21.Developed Pave	21	1.00	90	%	1
22.Undev Paved (F	31	10.10	100	%	0
23.Developed Grav				%	
Acres				%	
24.Undev Gravel (				%	
25.Comm Base Pave				%	
26.Comm Base Grav				%	
27.Backlot				%	
28.Rear Land				%	
29.Pavement				%	

Total Acreage 11.10

Influence Codes

1.Unimproved
2.Excess Frtg
3.Topography
4.Size/Shape
5.Access
6.Restriction
7.Open Space
8.View/Environ
9.Fract Share
Acres
30.Utility R O W
31.Tillable
32.Pasture
33.Orchard
34.Softwood F&O
35.Mixed Wood F&O
36.Hardwood F&O
37.Softwood TG
38.Mixed Wood TG
39.Hardwood TG
40.Wasteland
41.Open Space
42.Mobile Home Si
43.Condo Site
44.Lot Improvemen
45.Subdivision Lo
46.Heavy Ind Sit

Washburn

Map Lot 008-014A | Account 216 | Location 456 Tabor Road | Card 1 Of 1 | 8/23/2023

Building Style	**4 Cape Cod**	
1.Conv.	5.Garrison	9.Gambrel
2.Ranch	6.Salt Box	10.Other
3.R Ranch	7.Contemp	11.Split
4.Cape	8.Log	12.
Dwelling Units	**1**	
Other Units	**0**	
Stories	**4 One & 1/2 Story**	
1.1	4.1.5	7.
2.2	5.1.75	8.
3.3	6.2.5	9.
Exterior Walls	**2 Vinyl/Aluminum**	
1.Wood	5.Stucco	9.T-111
2.Vin/Al	6.Brick	10.Other
3.Compos.	7.Stone	11.
4.Asbestos	8.Concrete	12.
Roof Surface	**1 Asphalt Shingles**	
1.Asphalt	4.Composit	7.
2.Slate	5.Wood	8.
3.Metal	6.Other	9.
SF Masonry Trim	**0**	
OPEN-3-CUSTOM	**0**	
OPEN-4-CUSTOM	**0**	
Year Built	**1898**	
Year Remodeled	**0**	
Foundation	**3 Brick &/or Stone**	
1.Concrete	4.Wood	7.
2.C Block	5.Slab	8.
3.Br/Stone	6.Piers	9.
Basement	**4 Full Basement**	
1.1/4 Bmt	4.Full Bmt	7.
2.1/2 Bmt	5.None	8.
3.3/4 Bmt	6.	9.None
Bsmt Gar # Cars	**0**	
Wet Basement	**2 Damp Basement**	
1.Dry	4.	7.
2.Damp	5.	8.
3.Wet	6.	9.

SF Bsmt Living	**0**	
Fin Bsmt Grade	**0 0**	
OPEN 5 OPTIONAL	**0**	
Heat Type	**0%**	**9 Not Heated**
1.HWBB	5.FWA	9.No Heat
2.HWCI	6.GravWA	10.
3.H Pump	7.Electric	11.
4.Steam	8.Fl/Wall	12.
Cool Type	**0%**	**9 None**
1.Refrig	4.W&C Air	7.
2.Evapor	5.	8.
3.H Pump	6.	9.None
Kitchen Style	**2 Typical**	
1.Modern	4.Obsolete	7.
2.Typical	5.	8.
3.Old Type	6.	9.None
Bath(s) Style	**2 Typical Bath(s)**	
1.Modern	4.Obsolete	7.
2.Typical	5.	8.
3.Old Type	6.	9.None
# Rooms	**12**	
# Bedrooms	**9**	
# Full Baths	**2**	
# Half Baths	**0**	
# Addn Fixtures	**0**	
# Fireplaces	**0**	

TRIO Software
A Division of Harris Computer Systems

Layout	**1 Typical**	
1.Typical	4.	7.
2.Inadeq	5.	8.
3.Poor	6.	9.
Attic	**9 None**	
1.1/4 Fin	4.Full Fin	7.
2.1/2 Fin	5.Fl/Stair	8.
3.3/4 Fin	6.	9.None
Insulation	**9 None**	
1.Full	4.Minimal	7.
2.Heavy	5.Partial	8.
3.Capped	6.	9.None
Unfinished %	**0%**	
Grade & Factor	**2 Fair 110%**	
1.E Grade	4.B Grade	7.
2.D Grade	5.A Grade	8.SC Grade
3.C Grade	6.AA Grade	9.Same
SQFT (Footprint)	**672**	
Condition	**5 Above Average**	
1.Poor	4.Avg	7.V G
2.Fair	5.Avg+	8.Exc
3.Avg-	6.Good	9.Same
Phys. % Good	**0%**	
Funct. % Good	**70%**	
Functional Code	**8 Incomplete**	
1.Incomp	4.Delap	7.No Power
2.O-Built	5.Bsmt	8.LongTerm
3.Damage	6.Common	9.None
Econ. % Good	**100%**	
Economic Code	**None**	
0.None	3.No Power	7.
1.Location	4.Generate	8.
2.Encroach	9.None	9.
Entrance Code	**1 Interior Inspect**	
1.Interior	4.Vacant	7.
2.Refusal	5.Estimate	8.
3.Informed	6.Reviewed	9.
Information Code	**1 Owner**	
1.Owner	4.Agent	7.
2.Relative	5.Estimate	8.
3.Tenant	6.Other	9.

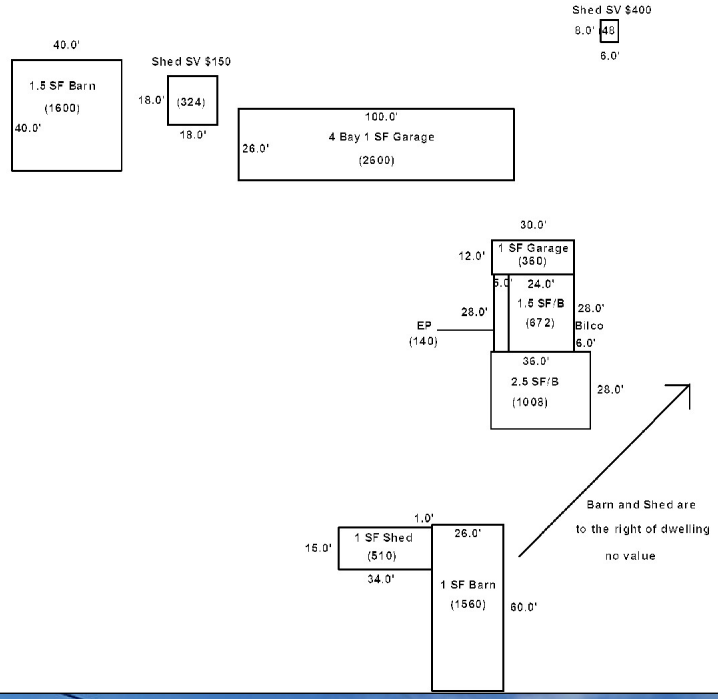

Date Inspected 10/18/2018

Additions, Outbuildings & Improvements

Type	Year	Units	Grade	Cond	Phys.	Funct.	Sound Value
16 2.5 Story/Bsmt	1920	1008	2 105	4	0 %	80 %	
22 Encl Frame Porch	1920	140	2 110	5	0 %	100 %	
23 Frame Garage	1945	360	2 110	4	0 %	80 %	
23 Frame Garage	1920	2600	2 100	1	0 %	50 %	
24 Frame Shed	0				%	%	150
59 Barn	1900	1600	2 100	1	0 %	50 %	
24 Frame Shed	0				%	%	400
					%	%	
					%	%	
					%	%	

1.One Story Fram
2.Two Story Fram
3.Three Story Fr
4.1 & 1/2 Story
5.1 & 3/4 Story
6.2 & 1/2 Story
21.Open Frame Por
22.Encl Frame Por
23.Frame Garage
24.Frame Shed
25.Frame Bay Wind
26.1SFr Overhang
27.Unfin Basement
28.Unfinished Att
29.Finished Attic

Map Lot 008-015 Account 1083 Location TABOR ROAD Card 1 Of 1 8/23/2023

ATCHESON, THOMAS J
522 CARSON ROAD
WOODLAND ME 04736

B3603P96

Property Data

Neighborhood **1 Neighborhood One**

Tree Growth Year **0**

1ST MORTGAGE **0**

2ND MORTGAGE **0**

Zone/Land Use **1 Residential**

Secondary Zone

Topography **2 Rolling**

1.Level	4.Below St	7.LevelBog
2.Rolling	5.Low	8.
3.Above St	6.Swampy	9.

Utilities

1.Public	4.Dr Well	7.Cesspool
2.Water	5.Dug Well	8.
3.Sewer	6.Septic	9.None

Street **1 Paved**

1.Paved	4.Proposed	7.
2.Semi Imp	5.R/O/W	8.
3.Gravel	6.	9.None

TG PLAN YEAR **0**

Tif District # **0**

Sale Data

Sale Date **12/27/2001**

Price

Sale Type **1 Land Only**

1.Land	4.Mobile	7.C/I L&B
2.L & B	5.Other	8.
3.Building	6.C/I Land	9.

Financing

1.Convent	4.Seller	7.
2.FHA/VA	5.Private	8.
3.Assumed	6.Cash	9.Unknown

Validity **1 Arms Length Sale**

1.Valid	4.Split	7.Renovate
2.Related	5.Partial	8.Other
3.Distress	6.Exempt	9.

Verified **5 Public Record**

1.Buyer	4.Agent	7.Family
2.Seller	5.Pub Rec	8.Other
3.Lender	6.MLS	9.

Assessment Record

Year	Land	Buildings	Exempt	Total
2012	1,300	0	0	1,300
2013	1,700	0	0	1,700
2015	1,700	0	0	1,700
2018	1,700	0	0	1,700
2019	400	0	0	400
2020	400	0	0	400
2021	400	0	0	400
2022	400	0	0	400
2023	500	0	0	500

Land Data

Front Foot	Type	Effective Frontage	Effective Depth	Influence Factor	Influence Code
11.Regular Lot	14	0	0	100 %	0
12.Delta Triangle				%	
13.Nabla Triangle				%	
14.Rear Land				%	
15.Class I Road				%	
				%	
				%	
Square Foot		**Square Feet**			
16.Class II Road				%	
17.Municipal Rese				%	
18.Munic Sep Lago				%	
19.Gravel Pit				%	
20.Industrial Bas				%	
				%	
				%	
Fract. Acre		**Acreage/Sites**			
21.Developed Pave	40	6.00		100 %	0
22.Undev Paved (F				%	
23.Developed Grav				%	
Acres				%	
24.Undev Gravel (				%	
25.Comm Base Pave				%	
26.Comm Base Grav				%	
27.Backlot				%	
28.Rear Land				%	
29.Pavement				%	

Total Acreage 6.00

Influence Codes

1.Unimproved
2.Excess Frtg
3.Topography
4.Size/Shape
5.Access
6.Restriction
7.Open Space
8.View/Environ
9.Fract Share
Acres
30.Utility R O W
31.Tillable
32.Pasture
33.Orchard
34.Softwood F&O
35.Mixed Wood F&O
36.Hardwood F&O
37.Softwood TG
38.Mixed Wood TG
39.Hardwood TG
40.Wasteland
41.Open Space
42.Mobile Home Si
43.Condo Site
44.Lot Improvemen
45.Subdivision Lo
46.Heavy Ind Sit

Inspection Witnessed By:

X Date

No./Date	Description	Date Insp.

Notes:

Washburn

Washburn

Map Lot 008-015 | Account 1083 | Location TABOR ROAD | Card 1 Of 1 | 8/23/2023

Building Style **0**		
1.Conv.	5.Garrison	9.Gambrel
2.Ranch	6.Salt Box	10.Other
3.R Ranch	7.Contemp	11.Split
4.Cape	8.Log	12.
Dwelling Units **0**		
Other Units **0**		
Stories **0**		
1.1	4.1.5	7.
2.2	5.1.75	8.
3.3	6.2.5	9.
Exterior Walls **0**		
1.Wood	5.Stucco	9.T-111
2.Vin/Al	6.Brick	10.Other
3.Compos.	7.Stone	11.
4.Asbestos	8.Concrete	12.
Roof Surface **0**		
1.Asphalt	4.Composit	7.
2.Slate	5.Wood	8.
3.Metal	6.Other	9.
SF Masonry Trim **0**		
OPEN-3-CUSTOM **0**		
OPEN-4-CUSTOM **0**		
Year Built **0**		
Year Remodeled **0**		
Foundation **0**		
1.Concrete	4.Wood	7.
2.C Block	5.Slab	8.
3.Br/Stone	6.Piers	9.
Basement **0**		
1.1/4 Bmt	4.Full Bmt	7.
2.1/2 Bmt	5.None	8.
3.3/4 Bmt	6.	9.None
Bsmt Gar # Cars **0**		
Wet Basement **0**		
1.Dry	4.	7.
2.Damp	5.	8.
3.Wet	6.	9.

SF Bsmt Living **0**		
Fin Bsmt Grade **0 0**		
OPEN 5 OPTIONAL **0**		
Heat Type **100%** **0**		
1.HWBB	5.FWA	9.No Heat
2.HWCI	6.GravWA	10.
3.H Pump	7.Electric	11.
4.Steam	8.Fl/Wall	12.
Cool Type **0%** **9 None**		
1.Refrig	4.W&C Air	7.
2.Evapor	5.	8.
3.H Pump	6.	9.None
Kitchen Style **0**		
1.Modern	4.Obsolete	7.
2.Typical	5.	8.
3.Old Type	6.	9.None
Bath(s) Style **0**		
1.Modern	4.Obsolete	7.
2.Typical	5.	8.
3.Old Type	6.	9.None
# Rooms **0**		
# Bedrooms **0**		
# Full Baths **0**		
# Half Baths **0**		
# Addn Fixtures **0**		
# Fireplaces **0**		

TRIO Software
A Division of Harris Computer Systems

Layout **0**		
1.Typical	4.	7.
2.Inadeq	5.	8.
3.Poor	6.	9.
Attic **0**		
1.1/4 Fin	4.Full Fin	7.
2.1/2 Fin	5.Fl/Stair	8.
3.3/4 Fin	6.	9.None
Insulation **0**		
1.Full	4.Minimal	7.
2.Heavy	5.Partial	8.
3.Capped	6.	9.None
Unfinished % **0%**		
Grade & Factor **0 0%**		
1.E Grade	4.B Grade	7.
2.D Grade	5.A Grade	8.SC Grade
3.C Grade	6.AA Grade	9.Same
SQFT (Footprint) **0**		
Condition **0**		
1.Poor	4.Avg	7.V G
2.Fair	5.Avg+	8.Exc
3.Avg-	6.Good	9.Same
Phys. % Good **0%**		
Funct. % Good **100%**		
Functional Code **9 None**		
1.Incomp	4.Delap	7.No Power
2.O-Built	5.Bsmt	8.LongTerm
3.Damage	6.Common	9.None
Econ. % Good **100%**		
Economic Code **None**		
0.None	3.No Power	7.
1.Location	4.Generate	8.
2.Encroach	9.None	9.
Entrance Code **0**		
1.Interior	4.Vacant	7.
2.Refusal	5.Estimate	8.
3.Informed	6.Reviewed	9.
Information Code **0**		
1.Owner	4.Agent	7.
2.Relative	5.Estimate	8.
3.Tenant	6.Other	9.

Date Inspected

Additions, Outbuildings & Improvements

Type	Year	Units	Grade	Cond	Phys.	Funct.	Sound Value
					%	%	
					%	%	
					%	%	
					%	%	
					%	%	
					%	%	
					%	%	
					%	%	
					%	%	
					%	%	

1.One Story Fram
2.Two Story Fram
3.Three Story Fr
4.1 & 1/2 Story
5.1 & 3/4 Story
6.2 & 1/2 Story
21.Open Frame Por
22.Encl Frame Por
23.Frame Garage
24.Frame Shed
25.Frame Bay Wind
26.1SFr Overhang
27.Unfin Basement
28.Unfinished Att
29.Finished Attic

Map Lot 008-016 Account 995 Location 509 TABOR ROAD Card 1 Of 1 8/23/2023

VAILLINCOURT, RENE P
509 TABOR ROAD
WASHBURN ME 04786

B6097P155

Property Data

Neighborhood **1 Neighborhood One**

Tree Growth Year **0**

1ST MORTGAGE **0**

2ND MORTGAGE **0**

Zone/Land Use **1 Residential**

Secondary Zone

Topography **2 Rolling**

1.Level	4.Below St	7.LevelBog
2.Rolling	5.Low	8.
3.Above St	6.Swampy	9.

Utilities **4 Drilled Well** **6 Septic System**

1.Public	4.Dr Well	7.Cesspool
2.Water	5.Dug Well	8.
3.Sewer	6.Septic	9.None

Street **1 Paved**

1.Paved	4.Proposed	7.
2.Semi Imp	5.R/O/W	8.
3.Gravel	6.	9.None

TG PLAN YEAR **0**

Tif District # **0**

Sale Data

Sale Date **4/17/1986**

Price

Sale Type **2 Land & Buildings**

1.Land	4.Mobile	7.C/I L&B
2.L & B	5.Other	8.
3.Building	6.C/I Land	9.

Financing

1.Convent	4.Seller	7.
2.FHA/VA	5.Private	8.
3.Assumed	6.Cash	9.Unknown

Validity **2 Related Parties**

1.Valid	4.Split	7.Renovate
2.Related	5.Partial	8.Other
3.Distress	6.Exempt	9.

Verified **5 Public Record**

1.Buyer	4.Agent	7.Family
2.Seller	5.Pub Rec	8.Other
3.Lender	6.MLS	9.

Assessment Record

Year	Land	Buildings	Exempt	Total
2012	2,700	12,100	8,800	6,000
2013	3,500	12,100	8,800	6,800
2015	3,500	12,100	9,000	6,600
2018	3,500	12,100	15,600	0
2019	7,600	15,500	20,000	3,100
2020	7,600	15,100	22,700	0
2021	7,600	15,500	23,100	0
2022	7,600	16,200	0	23,800
2023	10,100	19,200	0	29,300

Land Data

Front Foot	Type	Effective Frontage	Effective Depth	Influence Factor	Influence Code
11.Regular Lot				%	
12.Delta Triangle				%	
13.Nabla Triangle				%	
14.Rear Land				%	
15.Class I Road				%	
				%	
				%	
Square Foot		**Square Feet**			
16.Class II Road				%	
17.Municipal Rese				%	
18.Munic Sep Lago				%	
19.Gravel Pit				%	
20.Industrial Bas				%	
				%	
				%	
Fract. Acre		**Acreage/Sites**			
21.Developed Pave	21	0.21		100 %	0
22.Undev Paved (F				%	
23.Developed Grav				%	
Acres				%	
24.Undev Gravel (				%	
25.Comm Base Pave				%	
26.Comm Base Grav				%	
27.Backlot				%	
28.Rear Land				%	
29.Pavement				%	

Total Acreage 0.21

Influence Codes

1.Unimproved
2.Excess Frtg
3.Topography
4.Size/Shape
5.Access
6.Restriction
7.Open Space
8.View/Environ
9.Fract Share
Acres
30.Utility R O W
31.Tillable
32.Pasture
33.Orchard
34.Softwood F&O
35.Mixed Wood F&O
36.Hardwood F&O
37.Softwood TG
38.Mixed Wood TG
39.Hardwood TG
40.Wasteland
41.Open Space
42.Mobile Home Si
43.Condo Site
44.Lot Improvemen
45.Subdivision Lo
46.Heavy Ind Sit

Inspection Witnessed By:

X Date

No./Date	Description	Date Insp.

Notes:
*5-8-2019 -10% for delap.

Washburn

Washburn

Map Lot 008-016 | Account 995 | Location 509 TABOR ROAD | Card 1 Of 1 | 8/23/2023

Building Style	**2 Ranch**		
1.Conv.	5.Garrison	9.Gambrel	
2.Ranch	6.Salt Box	10.Other	
3.R Ranch	7.Contemp	11.Split	
4.Cape	8.Log	12.	
Dwelling Units	**1**		
Other Units	**0**		
Stories	**1 One Story**		
1.1	4.1.5	7.	
2.2	5.1.75	8.	
3.3	6.2.5	9.	
Exterior Walls	**2 Vinyl/Aluminum**		
1.Wood	5.Stucco	9.T-111	
2.Vin/Al	6.Brick	10.Other	
3.Compos.	7.Stone	11.	
4.Asbestos	8.Concrete	12.	
Roof Surface	**1 Asphalt Shingles**		
1.Asphalt	4.Composit	7.	
2.Slate	5.Wood	8.	
3.Metal	6.Other	9.	
SF Masonry Trim	**0**		
OPEN-3-CUSTOM	**0**		
OPEN-4-CUSTOM	**0**		
Year Built	**1980**		
Year Remodeled	**0**		
Foundation	**4 Wood**		
1.Concrete	4.Wood	7.	
2.C Block	5.Slab	8.	
3.Br/Stone	6.Piers	9.	
Basement	**4 Full Basement**		
1.1/4 Bmt	4.Full Bmt	7.	
2.1/2 Bmt	5.None	8.	
3.3/4 Bmt	6.	9.None	
Bsmt Gar # Cars	**0**		
Wet Basement	**2 Damp Basement**		
1.Dry	4.	7.	
2.Damp	5.	8.	
3.Wet	6.	9.	

SF Bsmt Living	**0**		
Fin Bsmt Grade	**0 0**		
OPEN 5 OPTIONAL	**0**		
Heat Type	**100%**	**5 Forced Warm Air**	
1.HWBB	5.FWA	9.No Heat	
2.HWCI	6.GravWA	10.	
3.H Pump	7.Electric	11.	
4.Steam	8.Fl/Wall	12.	
Cool Type	**0%**	**9 None**	
1.Refrig	4.W&C Air	7.	
2.Evapor	5.	8.	
3.H Pump	6.	9.None	
Kitchen Style	**2 Typical**		
1.Modern	4.Obsolete	7.	
2.Typical	5.	8.	
3.Old Type	6.	9.None	
Bath(s) Style	**2 Typical Bath(s)**		
1.Modern	4.Obsolete	7.	
2.Typical	5.	8.	
3.Old Type	6.	9.None	
# Rooms	**4**		
# Bedrooms	**3**		
# Full Baths	**1**		
# Half Baths	**0**		
# Addn Fixtures	**0**		
# Fireplaces	**0**		

TRIO Software
A Division of Harris Computer Systems

Layout	**1 Typical**		
1.Typical	4.	7.	
2.Inadeq	5.	8.	
3.Poor	6.	9.	
Attic	**9 None**		
1.1/4 Fin	4.Full Fin	7.	
2.1/2 Fin	5.Fl/Stair	8.	
3.3/4 Fin	6.	9.None	
Insulation	**1 Full**		
1.Full	4.Minimal	7.	
2.Heavy	5.Partial	8.	
3.Capped	6.	9.None	
Unfinished %	**0%**		
Grade & Factor	**2 Fair 100%**		
1.E Grade	4.B Grade	7.	
2.D Grade	5.A Grade	8.SC Grade	
3.C Grade	6.AA Grade	9.Same	
SQFT (Footprint)	**825**		
Condition	**2 Fair**		
1.Poor	4.Avg	7.V G	
2.Fair	5.Avg+	8.Exc	
3.Avg-	6.Good	9.Same	
Phys. % Good	**0%**		
Funct. % Good	**90%**		
Functional Code	**4 Delapidation**		
1.Incomp	4.Delap	7.No Power	
2.O-Built	5.Bsmt	8.LongTerm	
3.Damage	6.Common	9.None	
Econ. % Good	**100%**		
Economic Code	**None**		
0.None	3.No Power	7.	
1.Location	4.Generate	8.	
2.Encroach	9.None	9.	
Entrance Code	**1 Interior Inspect**		
1.Interior	4.Vacant	7.	
2.Refusal	5.Estimate	8.	
3.Informed	6.Reviewed	9.	
Information Code	**1 Owner**		
1.Owner	4.Agent	7.	
2.Relative	5.Estimate	8.	
3.Tenant	6.Other	9.	

Date Inspected 10/18/2018

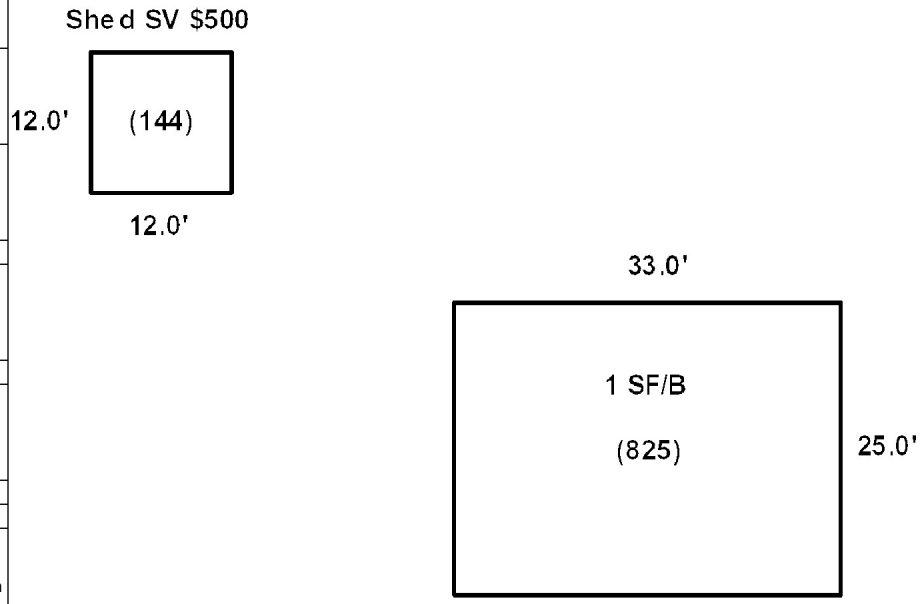

Additions, Outbuildings & Improvements

Type	Year	Units	Grade	Cond	Phys.	Funct.	Sound Value
24 Frame Shed	0				%	%	500
					%	%	
					%	%	
					%	%	
					%	%	
					%	%	
					%	%	
					%	%	
					%	%	
					%	%	

1.One Story Fram
2.Two Story Fram
3.Three Story Fr
4.1 & 1/2 Story
5.1 & 3/4 Story
6.2 & 1/2 Story
21.Open Frame Por
22.Encl Frame Por
23.Frame Garage
24.Frame Shed
25.Frame Bay Wind
26.1SFr Overhang
27.Unfin Basement
28.Unfinished Att
29.Finished Attic

Map Lot 008-017 | Account 1004 | Location 443 Tabor Road | Card 1 Of 1 | 8/23/2023

Clayton, Kim
456 Tabor Road
Washburn ME 04786

B3547P214

Previous Owner
Wardwell, Maxine
456 Tabor Road

Washburn ME 04786
Sale Date: 5/07/2010

Inspection Witnessed By:

X Date

No./Date	Description	Date Insp.

Notes:

* Dwelling assessed at 100% complete for 2021. 4-7-2021 ED
* Updated dwelling functional percent to 95% for upstairs flooring still being incomplete. Check 2021 for finish
*1-3-2019 -10% off baselot for dug well and cesspool. Dwelling assessed at 80% complete at time of reval due to upstairs being unfinished. -10% for attached garage, -30% for size obs and delap on barn. -20% for attached shed.

Washburn

Property Data

Neighborhood **1 Neighborhood One**

Tree Growth Year **0**

1ST MORTGAGE **0**

2ND MORTGAGE **0**

Zone/Land Use **1 Residential**

Secondary Zone

Topography **2 Rolling**

1.Level 4.Below St 7.LevelBog
2.Rolling 5.Low 8.
3.Above St 6.Swampy 9.

Utilities **5 Dug Well** **7 Cesspool**

1.Public 4.Dr Well 7.Cesspool
2.Water 5.Dug Well 8.
3.Sewer 6.Septic 9.None

Street **1 Paved**

1.Paved 4.Proposed 7.
2.Semi Imp 5.R/O/W 8.
3.Gravel 6. 9.None

TG PLAN YEAR **0**

Tif District # **0**

Sale Data

Sale Date **5/07/2010**

Price

Sale Type **2 Land & Buildings**

1.Land 4.Mobile 7.C/I L&B
2.L & B 5.Other 8.
3.Building 6.C/I Land 9.

Financing

1.Convent 4.Seller 7.
2.FHA/VA 5.Private 8.
3.Assumed 6.Cash 9.Unknown

Validity **2 Related Parties**

1.Valid 4.Split 7.Renovate
2.Related 5.Partial 8.Other
3.Distress 6.Exempt 9.

Verified **5 Public Record**

1.Buyer 4.Agent 7.Family
2.Seller 5.Pub Rec 8.Other
3.Lender 6.MLS 9.

Assessment Record

Year	Land	Buildings	Exempt	Total
2012	58,400	32,300	0	90,700
2013	75,900	32,300	0	108,200
2015	75,900	32,300	0	108,200
2018	75,900	32,300	0	108,200
2019	138,900	47,900	0	186,800
2020	138,900	52,800	0	191,700
2021	138,900	54,600	0	193,500
2022	138,900	57,300	0	196,200
2023	147,500	68,200	0	215,700

Land Data

Front Foot

11.Regular Lot
12.Delta Triangle
13.Nabla Triangle
14.Rear Land
15.Class I Road

Square Foot

16.Class II Road
17.Municipal Rese
18.Munic Sep Lago
19.Gravel Pit
20.Industrial Bas

Fract. Acre

21.Developed Pave
22.Undev Paved (F
23.Developed Grav

Acres

24.Undev Gravel (
25.Comm Base Pave
26.Comm Base Grav
27.Backlot
28.Rear Land
29.Pavement

Type	Effective Frontage	Effective Depth	Influence Factor	Influence Code
			%	
			%	
			%	
			%	
			%	
			%	
			%	
Square Feet				
			%	
			%	
			%	
			%	
			%	
			%	
			%	
Acreage/Sites				
21	1.00	90	%	1
28	46.00	100	%	0
31	101.00	100	%	0
			%	
			%	
			%	
			%	

Total Acreage 148.00

Influence Codes

1.Unimproved
2.Excess Frtg
3.Topography
4.Size/Shape
5.Access
6.Restriction
7.Open Space
8.View/Environ
9.Fract Share

Acres

30.Utility R O W
31.Tillable
32.Pasture
33.Orchard
34.Softwood F&O
35.Mixed Wood F&O
36.Hardwood F&O
37.Softwood TG
38.Mixed Wood TG
39.Hardwood TG
40.Wasteland
41.Open Space
42.Mobile Home Si
43.Condo Site
44.Lot Improvemen
45.Subdivision Lo
46.Heavy Ind Sit

Washburn

Map Lot 008-017 | Account 1004 | Location 443 Tabor Road | Card 1 Of 1 | 8/23/2023

Building Style	**4 Cape Cod**		
1.Conv.	5.Garrison	9.Gambrel	
2.Ranch	6.Salt Box	10.Other	
3.R Ranch	7.Contemp	11.Split	
4.Cape	8.Log	12.	
Dwelling Units	**1**		
Other Units	**0**		
Stories	**4 One & 1/2 Story**		
1.1	4.1.5	7.	
2.2	5.1.75	8.	
3.3	6.2.5	9.	
Exterior Walls	**2 Vinyl/Aluminum**		
1.Wood	5.Stucco	9.T-111	
2.Vin/Al	6.Brick	10.Other	
3.Compos.	7.Stone	11.	
4.Asbestos	8.Concrete	12.	
Roof Surface	**3 Sheet Metal**		
1.Asphalt	4.Composit	7.	
2.Slate	5.Wood	8.	
3.Metal	6.Other	9.	
SF Masonry Trim	**0**		
OPEN-3-CUSTOM	**0**		
OPEN-4-CUSTOM	**0**		
Year Built	**1900**		
Year Remodeled	**1970**		
Foundation	**3 Brick &/or Stone**		
1.Concrete	4.Wood	7.	
2.C Block	5.Slab	8.	
3.Br/Stone	6.Piers	9.	
Basement	**3 3/4 Basement**		
1.1/4 Bmt	4.Full Bmt	7.	
2.1/2 Bmt	5.None	8.	
3.3/4 Bmt	6.	9.None	
Bsmt Gar # Cars	**0**		
Wet Basement	**3 Wet Basement**		
1.Dry	4.	7.	
2.Damp	5.	8.	
3.Wet	6.	9.	

SF Bsmt Living	**0**		
Fin Bsmt Grade	**0 0**		
OPEN 5 OPTIONAL	**0**		
Heat Type	**100%**	**5 Forced Warm Air**	
1.HWBB	5.FWA	9.No Heat	
2.HWCI	6.GravWA	10.	
3.H Pump	7.Electric	11.	
4.Steam	8.Fl/Wall	12.	
Cool Type	**0%**	**9 None**	
1.Refrig	4.W&C Air	7.	
2.Evapor	5.	8.	
3.H Pump	6.	9.None	
Kitchen Style	**2 Typical**		
1.Modern	4.Obsolete	7.	
2.Typical	5.	8.	
3.Old Type	6.	9.None	
Bath(s) Style	**2 Typical Bath(s)**		
1.Modern	4.Obsolete	7.	
2.Typical	5.	8.	
3.Old Type	6.	9.None	
# Rooms	**4**		
# Bedrooms	**2**		
# Full Baths	**1**		
# Half Baths	**0**		
# Addn Fixtures	**0**		
# Fireplaces	**0**		

TRIO Software
A Division of Harris Computer Systems

Layout	**1 Typical**		
1.Typical	4.	7.	
2.Inadeq	5.	8.	
3.Poor	6.	9.	
Attic	**9 None**		
1.1/4 Fin	4.Full Fin	7.	
2.1/2 Fin	5.Fl/Stair	8.	
3.3/4 Fin	6.	9.None	
Insulation	**9 None**		
1.Full	4.Minimal	7.	
2.Heavy	5.Partial	8.	
3.Capped	6.	9.None	
Unfinished %	**0%**		
Grade & Factor	**2 Fair 110%**		
1.E Grade	4.B Grade	7.	
2.D Grade	5.A Grade	8.SC Grade	
3.C Grade	6.AA Grade	9.Same	
SQFT (Footprint)	**576**		
Condition	**5 Above Average**		
1.Poor	4.Avg	7.V G	
2.Fair	5.Avg+	8.Exc	
3.Avg-	6.Good	9.Same	
Phys. % Good	**0%**		
Funct. % Good	**100%**		
Functional Code	**9 None**		
1.Incomp	4.Delap	7.No Power	
2.O-Built	5.Bsmt	8.LongTerm	
3.Damage	6.Common	9.None	
Econ. % Good	**100%**		
Economic Code	**None**		
0.None	3.No Power	7.	
1.Location	4.Generate	8.	
2.Encroach	9.None	9.	
Entrance Code	**1 Interior Inspect**		
1.Interior	4.Vacant	7.	
2.Refusal	5.Estimate	8.	
3.Informed	6.Reviewed	9.	
Information Code	**3 Tenant**		
1.Owner	4.Agent	7.	
2.Relative	5.Estimate	8.	
3.Tenant	6.Other	9.	

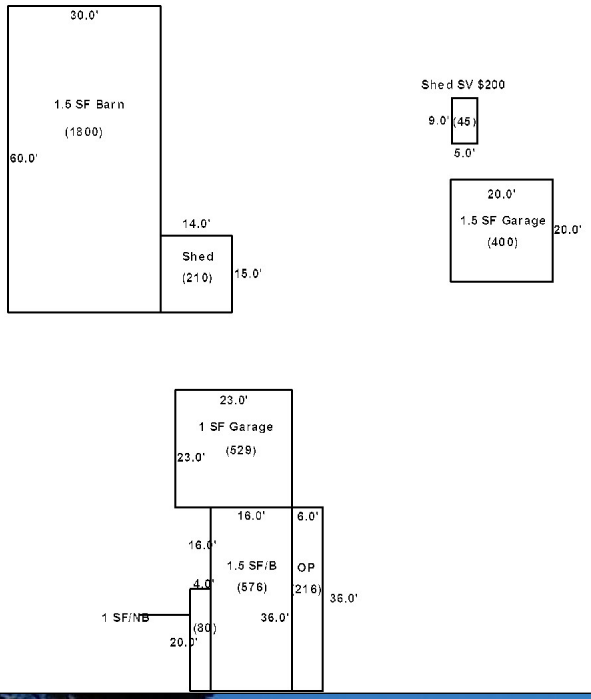

Date Inspected 10/18/2018

Additions, Outbuildings & Improvements

Type	Year	Units	Grade	Cond	Phys.	Funct.	Sound Value
21 Open Frame	1990	216	2 110	4	0 %	100 %	
23 Frame Garage	1930	529	2 100	2	0 %	90 %	
82 1.5 S-Gar	1940	400	2 105	2	0 %	100 %	
24 Frame Shed	1920	210	2 105	2	0 %	80 %	
59 Barn	1900	1800	2 110	2	0 %	70 %	
24 Frame Shed	0				%	%	200
1 One Story Frame	1900	80	2 105	5	0 %	100 %	
					%	%	
					%	%	
					%	%	

1.One Story Fram
2.Two Story Fram
3.Three Story Fr
4.1 & 1/2 Story
5.1 & 3/4 Story
6.2 & 1/2 Story
21.Open Frame Por
22.Encl Frame Por
23.Frame Garage
24.Frame Shed
25.Frame Bay Wind
26.1SFr Overhang
27.Unfin Basement
28.Unfinished Att
29.Finished Attic

Map Lot 008-017A | Account 215 | Location 413 Tabor Road | Card 1 Of 1 | 8/23/2023

Clayton, Marty A
Clayton, Kim M
456 Tabor Road
Washburn ME 04786

B2333P313

Property Data

Neighborhood **1 Neighborhood One**

Tree Growth Year **0**

1ST MORTGAGE **0**

2ND MORTGAGE **0**

Zone/Land Use **1 Residential**

Secondary Zone

Topography **1 Level**

1.Level	4.Below St	7.LevelBog
2.Rolling	5.Low	8.
3.Above St	6.Swampy	9.

Utilities **4 Drilled Well** **7 Cesspool**

1.Public	4.Dr Well	7.Cesspool
2.Water	5.Dug Well	8.
3.Sewer	6.Septic	9.None

Street **1 Paved**

1.Paved	4.Proposed	7.
2.Semi Imp	5.R/O/W	8.
3.Gravel	6.	9.None

TG PLAN YEAR **0**

Tif District # **0**

Sale Data

Sale Date

Price

Sale Type **2 Land & Buildings**

1.Land	4.Mobile	7.C/I L&B
2.L & B	5.Other	8.
3.Building	6.C/I Land	9.

Financing

1.Convent	4.Seller	7.
2.FHA/VA	5.Private	8.
3.Assumed	6.Cash	9.Unknown

Validity

1.Valid	4.Split	7.Renovate
2.Related	5.Partial	8.Other
3.Distress	6.Exempt	9.

Verified

1.Buyer	4.Agent	7.Family
2.Seller	5.Pub Rec	8.Other
3.Lender	6.MLS	9.

Assessment Record

Year	Land	Buildings	Exempt	Total
2012	6,400	34,500	0	40,900
2013	8,300	34,500	0	42,800
2015	8,300	34,500	0	42,800
2018	8,300	34,500	0	42,800
2019	16,200	28,300	0	44,500
2020	16,200	28,300	0	44,500
2021	16,200	28,300	0	44,500
2022	16,200	29,700	0	45,900
2023	21,500	35,400	0	56,900

Land Data

Front Foot	Type	Effective Frontage	Effective Depth	Influence Factor	Influence Code
11.Regular Lot				%	
12.Delta Triangle				%	
13.Nabla Triangle				%	
14.Rear Land				%	
15.Class I Road				%	
				%	
				%	
Square Foot		**Square Feet**			
16.Class II Road				%	
17.Municipal Rese				%	
18.Munic Sep Lago				%	
19.Gravel Pit				%	
20.Industrial Bas				%	
				%	
				%	
Fract. Acre		**Acreage/Sites**			
21.Developed Pave	21	1.00	95	%	1
22.Undev Paved (F	28	1.00	100	%	0
23.Developed Grav				%	
Acres				%	
24.Undev Gravel (				%	
25.Comm Base Pave				%	
26.Comm Base Grav				%	
27.Backlot				%	
28.Rear Land				%	
29.Pavement				%	

Total Acreage 2.00

Influence Codes

1.Unimproved
2.Excess Frtg
3.Topography
4.Size/Shape
5.Access
6.Restriction
7.Open Space
8.View/Environ
9.Fract Share
Acres
30.Utility R O W
31.Tillable
32.Pasture
33.Orchard
34.Softwood F&O
35.Mixed Wood F&O
36.Hardwood F&O
37.Softwood TG
38.Mixed Wood TG
39.Hardwood TG
40.Wasteland
41.Open Space
42.Mobile Home Si
43.Condo Site
44.Lot Improvemen
45.Subdivision Lo
46.Heavy Ind Sit

Inspection Witnessed By:

X Date

No./Date	Description	Date Insp.

Notes:

*2-19-2019 DW HUD #'s TRA 078939 and TRA 078938. -5% off baselot for cesspool. -15% off barn due to delap.

Washburn

Washburn

Map Lot 008-017A | Account 215 | Location 413 Tabor Road | Card 1 Of 1 | 8/23/2023

Building Style **0**		
1.Conv.	5.Garrison	9.Gambrel
2.Ranch	6.Salt Box	10.Other
3.R Ranch	7.Contemp	11.Split
4.Cape	8.Log	12.
Dwelling Units **0**		
Other Units **0**		
Stories **0**		
1.1	4.1.5	7.
2.2	5.1.75	8.
3.3	6.2.5	9.
Exterior Walls **0**		
1.Wood	5.Stucco	9.T-111
2.Vin/Al	6.Brick	10.Other
3.Compos.	7.Stone	11.
4.Asbestos	8.Concrete	12.
Roof Surface **0**		
1.Asphalt	4.Composit	7.
2.Slate	5.Wood	8.
3.Metal	6.Other	9.
SF Masonry Trim **0**		
OPEN-3-CUSTOM **0**		
OPEN-4-CUSTOM **0**		
Year Built **0**		
Year Remodeled **0**		
Foundation **0**		
1.Concrete	4.Wood	7.
2.C Block	5.Slab	8.
3.Br/Stone	6.Piers	9.
Basement **0**		
1.1/4 Bmt	4.Full Bmt	7.
2.1/2 Bmt	5.None	8.
3.3/4 Bmt	6.	9.None
Bsmt Gar # Cars **0**		
Wet Basement **0**		
1.Dry	4.	7.
2.Damp	5.	8.
3.Wet	6.	9.

SF Bsmt Living **0**		
Fin Bsmt Grade **0 0**		
OPEN 5 OPTIONAL **0**		
Heat Type **100%** **0**		
1.HWBB	5.FWA	9.No Heat
2.HWCI	6.GravWA	10.
3.H Pump	7.Electric	11.
4.Steam	8.Fl/Wall	12.
Cool Type **0%** **9 None**		
1.Refrig	4.W&C Air	7.
2.Evapor	5.	8.
3.H Pump	6.	9.None
Kitchen Style **0**		
1.Modern	4.Obsolete	7.
2.Typical	5.	8.
3.Old Type	6.	9.None
Bath(s) Style **0**		
1.Modern	4.Obsolete	7.
2.Typical	5.	8.
3.Old Type	6.	9.None
# Rooms **0**		
# Bedrooms **0**		
# Full Baths **0**		
# Half Baths **0**		
# Addn Fixtures **0**		
# Fireplaces **0**		

TRIO Software
A Division of Harris Computer Systems

Layout **0**		
1.Typical	4.	7.
2.Inadeq	5.	8.
3.Poor	6.	9.
Attic **0**		
1.1/4 Fin	4.Full Fin	7.
2.1/2 Fin	5.Fl/Stair	8.
3.3/4 Fin	6.	9.None
Insulation **0**		
1.Full	4.Minimal	7.
2.Heavy	5.Partial	8.
3.Capped	6.	9.None
Unfinished % **0%**		
Grade & Factor **0 0%**		
1.E Grade	4.B Grade	7.
2.D Grade	5.A Grade	8.SC Grade
3.C Grade	6.AA Grade	9.Same
SQFT (Footprint) **0**		
Condition **0**		
1.Poor	4.Avg	7.V G
2.Fair	5.Avg+	8.Exc
3.Avg-	6.Good	9.Same
Phys. % Good **0%**		
Funct. % Good **100%**		
Functional Code **9 None**		
1.Incomp	4.Delap	7.No Power
2.O-Built	5.Bsmt	8.LongTerm
3.Damage	6.Common	9.None
Econ. % Good **100%**		
Economic Code **None**		
0.None	3.No Power	7.
1.Location	4.Generate	8.
2.Encroach	9.None	9.
Entrance Code **1 Interior Inspect**		
1.Interior	4.Vacant	7.
2.Refusal	5.Estimate	8.
3.Informed	6.Reviewed	9.
Information Code **3 Tenant**		
1.Owner	4.Agent	7.
2.Relative	5.Estimate	8.
3.Tenant	6.Other	9.

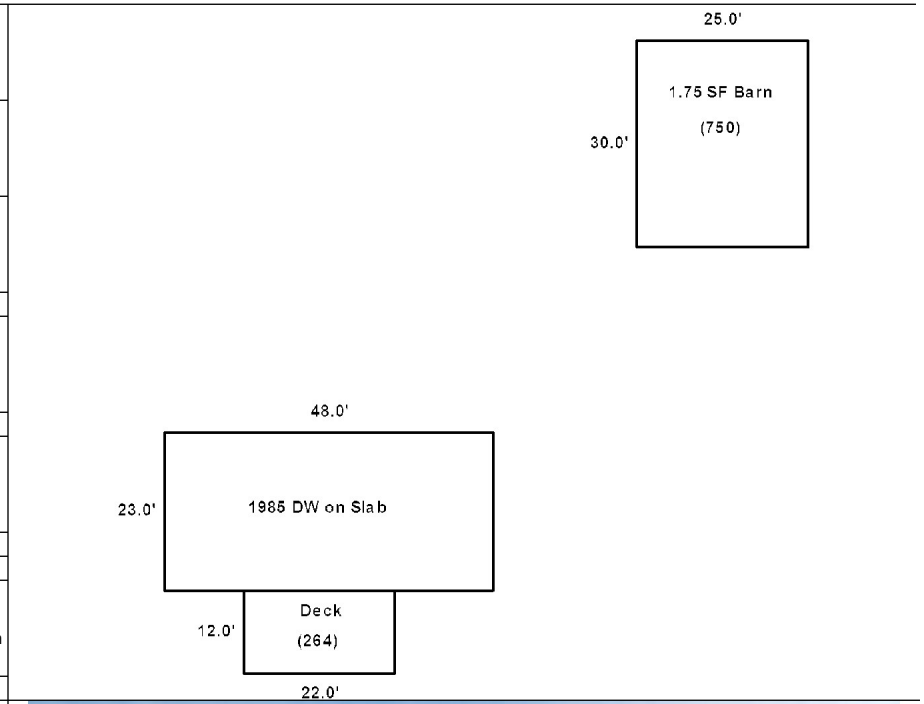

Date Inspected 10/19/2018

Additions, Outbuildings & Improvements

Type	Year	Units	Grade	Cond	Phys.	Funct.	Sound Value
992 Double Wide	1985	23x48	4 100	5	0 %	100 %	
48 Concrete Slab	1985	1104	3 100	4	0 %	100 %	
68 Wood Deck	1995	264	2 115	3	0 %	100 %	
59 Barn	1920	750	2 110	3	0 %	85 %	
					%	%	
					%	%	
					%	%	
					%	%	
					%	%	
					%	%	

1.One Story Fram
2.Two Story Fram
3.Three Story Fr
4.1 & 1/2 Story
5.1 & 3/4 Story
6.2 & 1/2 Story
21.Open Frame Por
22.Encl Frame Por
23.Frame Garage
24.Frame Shed
25.Frame Bay Wind
26.1SFr Overhang
27.Unfin Basement
28.Unfinished Att
29.Finished Attic

Map Lot 008-017B Account 1009 Location Tabor Road Card 1 Of 1 8/23/2023

Wardwell, Stephen
658 Carson Road
Woodland ME 04736

B3547P212

Property Data

Neighborhood	**1 Neighborhood One**
Tree Growth Year	**0**
1ST MORTGAGE	**0**
2ND MORTGAGE	**0**
Zone/Land Use	**1 Residential**
Secondary Zone	
Topography	**2 Rolling**

1.Level	4.Below St	7.LevelBog
2.Rolling	5.Low	8.
3.Above St	6.Swampy	9.

Utilities

1.Public	4.Dr Well	7.Cesspool
2.Water	5.Dug Well	8.
3.Sewer	6.Septic	9.None

Street **1 Paved**

1.Paved	4.Proposed	7.
2.Semi Imp	5.R/O/W	8.
3.Gravel	6.	9.None

TG PLAN YEAR	**0**
Tif District #	**0**

Sale Data

Sale Date	**8/16/2001**
Price	
Sale Type	**1 Land Only**

1.Land	4.Mobile	7.C/I L&B
2.L & B	5.Other	8.
3.Building	6.C/I Land	9.

Financing

1.Convent	4.Seller	7.
2.FHA/VA	5.Private	8.
3.Assumed	6.Cash	9.Unknown

Validity **2 Related Parties**

1.Valid	4.Split	7.Renovate
2.Related	5.Partial	8.Other
3.Distress	6.Exempt	9.

Verified **5 Public Record**

1.Buyer	4.Agent	7.Family
2.Seller	5.Pub Rec	8.Other
3.Lender	6.MLS	9.

Assessment Record

Year	Land	Buildings	Exempt	Total
2012	13,800	0	0	13,800
2013	17,900	0	0	17,900
2015	17,900	0	0	17,900
2018	17,900	0	0	17,900
2019	32,500	0	0	32,500
2020	32,500	0	0	32,500
2021	32,500	0	0	32,500
2022	32,500	0	0	32,500
2023	34,300	0	0	34,300

Land Data

Front Foot	Type	Effective Frontage	Effective Depth	Influence Factor	Influence Code
11.Regular Lot				%	
12.Delta Triangle				%	
13.Nabla Triangle				%	
14.Rear Land				%	
15.Class I Road				%	
				%	
				%	
Square Foot		**Square Feet**			
16.Class II Road				%	
17.Municipal Rese				%	
18.Munic Sep Lago				%	
19.Gravel Pit				%	
20.Industrial Bas				%	
				%	
				%	
Fract. Acre		**Acreage/Sites**			
21.Developed Pave	28	23.00	100	%	0
22.Undev Paved (F	31	21.00	100	%	0
23.Developed Grav				%	
Acres				%	
24.Undev Gravel (				%	
25.Comm Base Pave				%	
26.Comm Base Grav				%	
27.Backlot				%	
28.Rear Land				%	
29.Pavement				%	

Total Acreage 44.00

Influence Codes

1.Unimproved
2.Excess Frtg
3.Topography
4.Size/Shape
5.Access
6.Restriction
7.Open Space
8.View/Environ
9.Fract Share
Acres
30.Utility R O W
31.Tillable
32.Pasture
33.Orchard
34.Softwood F&O
35.Mixed Wood F&O
36.Hardwood F&O
37.Softwood TG
38.Mixed Wood TG
39.Hardwood TG
40.Wasteland
41.Open Space
42.Mobile Home Si
43.Condo Site
44.Lot Improvemen
45.Subdivision Lo
46.Heavy Ind Sit

Inspection Witnessed By:

X Date

No./Date	Description	Date Insp.

Notes:

Washburn

Washburn

Map Lot 008-017B | Account 1009 | Location Tabor Road | Card 1 Of 1 | 8/23/2023

Building Style **0**		
1.Conv.	5.Garrison	9.Gambrel
2.Ranch	6.Salt Box	10.Other
3.R Ranch	7.Contemp	11.Split
4.Cape	8.Log	12.
Dwelling Units **0**		
Other Units **0**		
Stories **0**		
1.1	4.1.5	7.
2.2	5.1.75	8.
3.3	6.2.5	9.
Exterior Walls **0**		
1.Wood	5.Stucco	9.T-111
2.Vin/Al	6.Brick	10.Other
3.Compos.	7.Stone	11.
4.Asbestos	8.Concrete	12.
Roof Surface **0**		
1.Asphalt	4.Composit	7.
2.Slate	5.Wood	8.
3.Metal	6.Other	9.
SF Masonry Trim **0**		
OPEN-3-CUSTOM **0**		
OPEN-4-CUSTOM **0**		
Year Built **0**		
Year Remodeled **0**		
Foundation **0**		
1.Concrete	4.Wood	7.
2.C Block	5.Slab	8.
3.Br/Stone	6.Piers	9.
Basement **0**		
1.1/4 Bmt	4.Full Bmt	7.
2.1/2 Bmt	5.None	8.
3.3/4 Bmt	6.	9.None
Bsmt Gar # Cars **0**		
Wet Basement **0**		
1.Dry	4.	7.
2.Damp	5.	8.
3.Wet	6.	9.

SF Bsmt Living **0**		
Fin Bsmt Grade **0 0**		
OPEN 5 OPTIONAL **0**		
Heat Type **100%** **0**		
1.HWBB	5.FWA	9.No Heat
2.HWCI	6.GravWA	10.
3.H Pump	7.Electric	11.
4.Steam	8.Fl/Wall	12.
Cool Type **0%** **9 None**		
1.Refrig	4.W&C Air	7.
2.Evapor	5.	8.
3.H Pump	6.	9.None
Kitchen Style **0**		
1.Modern	4.Obsolete	7.
2.Typical	5.	8.
3.Old Type	6.	9.None
Bath(s) Style **0**		
1.Modern	4.Obsolete	7.
2.Typical	5.	8.
3.Old Type	6.	9.None
# Rooms **0**		
# Bedrooms **0**		
# Full Baths **0**		
# Half Baths **0**		
# Addn Fixtures **0**		
# Fireplaces **0**		

TRIO Software
A Division of Harris Computer Systems

Layout **0**		
1.Typical	4.	7.
2.Inadeq	5.	8.
3.Poor	6.	9.
Attic **0**		
1.1/4 Fin	4.Full Fin	7.
2.1/2 Fin	5.Fl/Stair	8.
3.3/4 Fin	6.	9.None
Insulation **0**		
1.Full	4.Minimal	7.
2.Heavy	5.Partial	8.
3.Capped	6.	9.None
Unfinished % **0%**		
Grade & Factor **0 0%**		
1.E Grade	4.B Grade	7.
2.D Grade	5.A Grade	8.SC Grade
3.C Grade	6.AA Grade	9.Same
SQFT (Footprint) **0**		
Condition **0**		
1.Poor	4.Avg	7.V G
2.Fair	5.Avg+	8.Exc
3.Avg-	6.Good	9.Same
Phys. % Good **0%**		
Funct. % Good **100%**		
Functional Code **9 None**		
1.Incomp	4.Delap	7.No Power
2.O-Built	5.Bsmt	8.LongTerm
3.Damage	6.Common	9.None
Econ. % Good **100%**		
Economic Code **None**		
0.None	3.No Power	7.
1.Location	4.Generate	8.
2.Encroach	9.None	9.
Entrance Code **0**		
1.Interior	4.Vacant	7.
2.Refusal	5.Estimate	8.
3.Informed	6.Reviewed	9.
Information Code **0**		
1.Owner	4.Agent	7.
2.Relative	5.Estimate	8.
3.Tenant	6.Other	9.

Date Inspected

Additions, Outbuildings & Improvements

Type	Year	Units	Grade	Cond	Phys.	Funct.	Sound Value
					%	%	
					%	%	
					%	%	
					%	%	
					%	%	
					%	%	
					%	%	
					%	%	
					%	%	
					%	%	

1.One Story Fram
2.Two Story Fram
3.Three Story Fr
4.1 & 1/2 Story
5.1 & 3/4 Story
6.2 & 1/2 Story
21.Open Frame Por
22.Encl Frame Por
23.Frame Garage
24.Frame Shed
25.Frame Bay Wind
26.1SFr Overhang
27.Unfin Basement
28.Unfinished Att
29.Finished Attic

Map Lot 008-018 | Account 892 | Location Tabor Road | Card 1 Of 1 | 8/23/2023

Tarr, Mark D
Tarr, Deborah A
2059 WASHBURN ROAD
WASHBURN ME 04786

B3126P297

Property Data

Neighborhood **1 Neighborhood One**

Tree Growth Year **0**

1ST MORTGAGE **0**

2ND MORTGAGE **0**

Zone/Land Use **1 Residential**

Secondary Zone

Topography **2 Rolling**

1.Level	4.Below St	7.LevelBog
2.Rolling	5.Low	8.
3.Above St	6.Swampy	9.

Utilities

1.Public	4.Dr Well	7.Cesspool
2.Water	5.Dug Well	8.
3.Sewer	6.Septic	9.None

Street **1 Paved**

1.Paved	4.Proposed	7.
2.Semi Imp	5.R/O/W	8.
3.Gravel	6.	9.None

TG PLAN YEAR **0**

Tif District # **0**

Sale Data

Sale Date

Price

Sale Type

1.Land	4.Mobile	7.C/I L&B
2.L & B	5.Other	8.
3.Building	6.C/I Land	9.

Financing

1.Convent	4.Seller	7.
2.FHA/VA	5.Private	8.
3.Assumed	6.Cash	9.Unknown

Validity

1.Valid	4.Split	7.Renovate
2.Related	5.Partial	8.Other
3.Distress	6.Exempt	9.

Verified

1.Buyer	4.Agent	7.Family
2.Seller	5.Pub Rec	8.Other
3.Lender	6.MLS	9.

Assessment Record

Year	Land	Buildings	Exempt	Total
2012	30,700	0	0	30,700
2013	39,800	0	0	39,800
2015	39,800	0	0	39,800
2018	39,800	0	0	39,800
2019	78,200	0	0	78,200
2020	78,200	0	0	78,200
2021	78,200	0	0	78,200
2022	78,200	0	0	78,200
2023	81,300	0	0	81,300

Land Data

Front Foot	Type	Effective Frontage	Effective Depth	Influence Factor	Influence Code
11.Regular Lot				%	
12.Delta Triangle				%	
13.Nabla Triangle				%	
14.Rear Land				%	
15.Class I Road				%	
				%	
				%	
Square Foot		**Square Feet**			
16.Class II Road				%	
17.Municipal Rese				%	
18.Munic Sep Lago				%	
19.Gravel Pit				%	
20.Industrial Bas				%	
				%	
				%	
Fract. Acre		**Acreage/Sites**			
21.Developed Pave	22	1.00	100	%	0
22.Undev Paved (F	28	13.61	100	%	0
23.Developed Grav	31	62.39	100	%	0
Acres				%	
24.Undev Gravel (				%	
25.Comm Base Pave				%	
26.Comm Base Grav				%	
27.Backlot				%	
28.Rear Land					
29.Pavement		**Total Acreage**	77.00		

Influence Codes

1.Unimproved
2.Excess Frtg
3.Topography
4.Size/Shape
5.Access
6.Restriction
7.Open Space
8.View/Environ
9.Fract Share
Acres
30.Utility R O W
31.Tillable
32.Pasture
33.Orchard
34.Softwood F&O
35.Mixed Wood F&O
36.Hardwood F&O
37.Softwood TG
38.Mixed Wood TG
39.Hardwood TG
40.Wasteland
41.Open Space
42.Mobile Home Si
43.Condo Site
44.Lot Improvemen
45.Subdivision Lo
46.Heavy Ind Sit

Inspection Witnessed By:

X Date

No./Date	Description	Date Insp.

Notes:

Washburn

Washburn

Map Lot 008-018 | Account 892 | Location Tabor Road | Card 1 Of 1 | 8/23/2023

Building Style **0**		
1.Conv.	5.Garrison	9.Gambrel
2.Ranch	6.Salt Box	10.Other
3.R Ranch	7.Contemp	11.Split
4.Cape	8.Log	12.
Dwelling Units **0**		
Other Units **0**		
Stories **0**		
1.1	4.1.5	7.
2.2	5.1.75	8.
3.3	6.2.5	9.
Exterior Walls **0**		
1.Wood	5.Stucco	9.T-111
2.Vin/Al	6.Brick	10.Other
3.Compos.	7.Stone	11.
4.Asbestos	8.Concrete	12.
Roof Surface **0**		
1.Asphalt	4.Composit	7.
2.Slate	5.Wood	8.
3.Metal	6.Other	9.
SF Masonry Trim **0**		
OPEN-3-CUSTOM **0**		
OPEN-4-CUSTOM **0**		
Year Built **0**		
Year Remodeled **0**		
Foundation **0**		
1.Concrete	4.Wood	7.
2.C Block	5.Slab	8.
3.Br/Stone	6.Piers	9.
Basement **0**		
1.1/4 Bmt	4.Full Bmt	7.
2.1/2 Bmt	5.None	8.
3.3/4 Bmt	6.	9.None
Bsmt Gar # Cars **0**		
Wet Basement **0**		
1.Dry	4.	7.
2.Damp	5.	8.
3.Wet	6.	9.

SF Bsmt Living **0**		
Fin Bsmt Grade **0 0**		
OPEN 5 OPTIONAL **0**		
Heat Type **100%** **0**		
1.HWBB	5.FWA	9.No Heat
2.HWCI	6.GravWA	10.
3.H Pump	7.Electric	11.
4.Steam	8.Fl/Wall	12.
Cool Type **0%** **9 None**		
1.Refrig	4.W&C Air	7.
2.Evapor	5.	8.
3.H Pump	6.	9.None
Kitchen Style **0**		
1.Modern	4.Obsolete	7.
2.Typical	5.	8.
3.Old Type	6.	9.None
Bath(s) Style **0**		
1.Modern	4.Obsolete	7.
2.Typical	5.	8.
3.Old Type	6.	9.None
# Rooms **0**		
# Bedrooms **0**		
# Full Baths **0**		
# Half Baths **0**		
# Addn Fixtures **0**		
# Fireplaces **0**		

TRIO Software
A Division of Harris Computer Systems

Layout **0**		
1.Typical	4.	7.
2.Inadeq	5.	8.
3.Poor	6.	9.
Attic **0**		
1.1/4 Fin	4.Full Fin	7.
2.1/2 Fin	5.Fl/Stair	8.
3.3/4 Fin	6.	9.None
Insulation **0**		
1.Full	4.Minimal	7.
2.Heavy	5.Partial	8.
3.Capped	6.	9.None
Unfinished % **0%**		
Grade & Factor **0 0%**		
1.E Grade	4.B Grade	7.
2.D Grade	5.A Grade	8.SC Grade
3.C Grade	6.AA Grade	9.Same
SQFT (Footprint) **0**		
Condition **0**		
1.Poor	4.Avg	7.V G
2.Fair	5.Avg+	8.Exc
3.Avg-	6.Good	9.Same
Phys. % Good **0%**		
Funct. % Good **100%**		
Functional Code **9 None**		
1.Incomp	4.Delap	7.No Power
2.O-Built	5.Bsmt	8.LongTerm
3.Damage	6.Common	9.None
Econ. % Good **100%**		
Economic Code **None**		
0.None	3.No Power	7.
1.Location	4.Generate	8.
2.Encroach	9.None	9.
Entrance Code **0**		
1.Interior	4.Vacant	7.
2.Refusal	5.Estimate	8.
3.Informed	6.Reviewed	9.
Information Code **0**		
1.Owner	4.Agent	7.
2.Relative	5.Estimate	8.
3.Tenant	6.Other	9.

Date Inspected

Additions, Outbuildings & Improvements

Type	Year	Units	Grade	Cond	Phys.	Funct.	Sound Value
					%	%	
					%	%	
					%	%	
					%	%	
					%	%	
					%	%	
					%	%	
					%	%	
					%	%	
					%	%	

1.One Story Fram
2.Two Story Fram
3.Three Story Fr
4.1 & 1/2 Story
5.1 & 3/4 Story
6.2 & 1/2 Story
21.Open Frame Por
22.Encl Frame Por
23.Frame Garage
24.Frame Shed
25.Frame Bay Wind
26.1SFr Overhang
27.Unfin Basement
28.Unfinished Att
29.Finished Attic

Map Lot 008-019 Account 897 Location 369 Tabor Road Card 1 Of 1 8/23/2023

Theriault, Heather M
Theriault, Joel D
369 Tabor Road
Washburn ME 04786

B3027P189

Property Data

Neighborhood **1 Neighborhood One**

Tree Growth Year **0**

1ST MORTGAGE **0**

2ND MORTGAGE **0**

Zone/Land Use **1 Residential**

Secondary Zone

Topography **2 Rolling**

1.Level	4.Below St	7.LevelBog
2.Rolling	5.Low	8.
3.Above St	6.Swampy	9.

Utilities **4 Drilled Well** **6 Septic System**

1.Public	4.Dr Well	7.Cesspool
2.Water	5.Dug Well	8.
3.Sewer	6.Septic	9.None

Street **1 Paved**

1.Paved	4.Proposed	7.
2.Semi Imp	5.R/O/W	8.
3.Gravel	6.	9.None

TG PLAN YEAR **0**

Tif District # **0**

Sale Data

Sale Date

Price

Sale Type

1.Land	4.Mobile	7.C/I L&B
2.L & B	5.Other	8.
3.Building	6.C/I Land	9.

Financing

1.Convent	4.Seller	7.
2.FHA/VA	5.Private	8.
3.Assumed	6.Cash	9.Unknown

Validity

1.Valid	4.Split	7.Renovate
2.Related	5.Partial	8.Other
3.Distress	6.Exempt	9.

Verified

1.Buyer	4.Agent	7.Family
2.Seller	5.Pub Rec	8.Other
3.Lender	6.MLS	9.

Assessment Record

Year	Land	Buildings	Exempt	Total
2012	4,300	53,200	8,800	48,700
2013	5,600	53,200	8,800	50,000
2015	5,600	53,200	9,000	49,800
2018	5,600	53,200	18,400	40,400
2019	12,200	64,800	20,000	57,000
2020	12,200	64,000	25,000	51,200
2021	12,200	64,800	25,000	52,000
2022	12,200	67,900	25,000	55,100
2023	16,300	80,500	25,000	71,800

Land Data

Front Foot	Type	Effective Frontage	Effective Depth	Influence Factor	Influence Code
11.Regular Lot				%	
12.Delta Triangle				%	
13.Nabla Triangle				%	
14.Rear Land				%	
15.Class I Road				%	
				%	
				%	
Square Foot		**Square Feet**			
16.Class II Road				%	
17.Municipal Rese				%	
18.Munic Sep Lago				%	
19.Gravel Pit				%	
20.Industrial Bas				%	
				%	
				%	
Fract. Acre		**Acreage/Sites**			
21.Developed Pave	21	0.55		100 %	0
22.Undev Paved (F				%	
23.Developed Grav				%	
Acres				%	
24.Undev Gravel (				%	
25.Comm Base Pave				%	
26.Comm Base Grav				%	
27.Backlot				%	
28.Rear Land				%	
29.Pavement				%	

Total Acreage 0.55

Influence Codes

1.Unimproved
2.Excess Frtg
3.Topography
4.Size/Shape
5.Access
6.Restriction
7.Open Space
8.View/Environ
9.Fract Share
Acres
30.Utility R O W
31.Tillable
32.Pasture
33.Orchard
34.Softwood F&O
35.Mixed Wood F&O
36.Hardwood F&O
37.Softwood TG
38.Mixed Wood TG
39.Hardwood TG
40.Wasteland
41.Open Space
42.Mobile Home Si
43.Condo Site
44.Lot Improvemen
45.Subdivision Lo
46.Heavy Ind Sit

Inspection Witnessed By:

X Date

No./Date	Description	Date Insp.

Notes:
*5-8-2019 -10% for attache garage and shed.

Washburn

Washburn

Map Lot 008-019 | Account 897 | Location 369 Tabor Road | Card 1 Of 1 | 8/23/2023

Building Style	**4 Cape Cod**		
1.Conv.	5.Garrison	9.Gambrel	
2.Ranch	6.Salt Box	10.Other	
3.R Ranch	7.Contemp	11.Split	
4.Cape	8.Log	12.	
Dwelling Units	**1**		
Other Units	**0**		
Stories	**5 One & 3/4 Story**		
1.1	4.1.5	7.	
2.2	5.1.75	8.	
3.3	6.2.5	9.	
Exterior Walls	**2 Vinyl/Aluminum**		
1.Wood	5.Stucco	9.T-111	
2.Vin/Al	6.Brick	10.Other	
3.Compos.	7.Stone	11.	
4.Asbestos	8.Concrete	12.	
Roof Surface	**1 Asphalt Shingles**		
1.Asphalt	4.Composit	7.	
2.Slate	5.Wood	8.	
3.Metal	6.Other	9.	
SF Masonry Trim	**0**		
OPEN-3-CUSTOM	**0**		
OPEN-4-CUSTOM	**0**		
Year Built	**1970**		
Year Remodeled	**0**		
Foundation	**1 Concrete**		
1.Concrete	4.Wood	7.	
2.C Block	5.Slab	8.	
3.Br/Stone	6.Piers	9.	
Basement	**4 Full Basement**		
1.1/4 Bmt	4.Full Bmt	7.	
2.1/2 Bmt	5.None	8.	
3.3/4 Bmt	6.	9.None	
Bsmt Gar # Cars	**0**		
Wet Basement	**2 Damp Basement**		
1.Dry	4.	7.	
2.Damp	5.	8.	
3.Wet	6.	9.	

SF Bsmt Living	**0**		
Fin Bsmt Grade	**0 0**		
OPEN 5 OPTIONAL	**0**		
Heat Type	**100%**	**1 Hot Water BB**	
1.HWBB	5.FWA	9.No Heat	
2.HWCI	6.GravWA	10.	
3.H Pump	7.Electric	11.	
4.Steam	8.Fl/Wall	12.	
Cool Type	**0%**	**9 None**	
1.Refrig	4.W&C Air	7.	
2.Evapor	5.	8.	
3.H Pump	6.	9.None	
Kitchen Style	**2 Typical**		
1.Modern	4.Obsolete	7.	
2.Typical	5.	8.	
3.Old Type	6.	9.None	
Bath(s) Style	**2 Typical Bath(s)**		
1.Modern	4.Obsolete	7.	
2.Typical	5.	8.	
3.Old Type	6.	9.None	
# Rooms	**6**		
# Bedrooms	**2**		
# Full Baths	**1**		
# Half Baths	**0**		
# Addn Fixtures	**0**		
# Fireplaces	**1**		

TRIO Software
A Division of Harris Computer Systems

Layout	**1 Typical**		
1.Typical	4.	7.	
2.Inadeq	5.	8.	
3.Poor	6.	9.	
Attic	**9 None**		
1.1/4 Fin	4.Full Fin	7.	
2.1/2 Fin	5.Fl/Stair	8.	
3.3/4 Fin	6.	9.None	
Insulation	**1 Full**		
1.Full	4.Minimal	7.	
2.Heavy	5.Partial	8.	
3.Capped	6.	9.None	
Unfinished %	**0%**		
Grade & Factor	**3 Average 90%**		
1.E Grade	4.B Grade	7.	
2.D Grade	5.A Grade	8.SC Grade	
3.C Grade	6.AA Grade	9.Same	
SQFT (Footprint)	**884**		
Condition	**4 Average**		
1.Poor	4.Avg	7.V G	
2.Fair	5.Avg+	8.Exc	
3.Avg-	6.Good	9.Same	
Phys. % Good	**0%**		
Funct. % Good	**100%**		
Functional Code	**9 None**		
1.Incomp	4.Delap	7.No Power	
2.O-Built	5.Bsmt	8.LongTerm	
3.Damage	6.Common	9.None	
Econ. % Good	**100%**		
Economic Code	**None**		
0.None	3.No Power	7.	
1.Location	4.Generate	8.	
2.Encroach	9.None	9.	
Entrance Code	**1 Interior Inspect**		
1.Interior	4.Vacant	7.	
2.Refusal	5.Estimate	8.	
3.Informed	6.Reviewed	9.	
Information Code	**2 Relative**		
1.Owner	4.Agent	7.	
2.Relative	5.Estimate	8.	
3.Tenant	6.Other	9.	

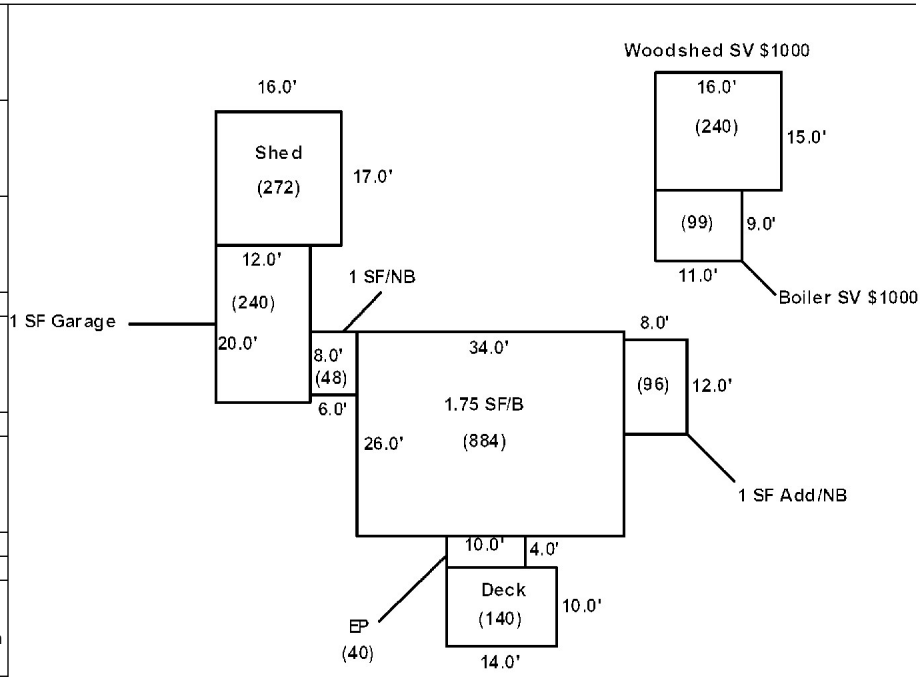

Date Inspected 10/19/2018

Additions, Outbuildings & Improvements

Type	Year	Units	Grade	Cond	Phys.	Funct.	Sound Value
1 One Story Frame	1990	96	3 95	4	0 %	100 %	
22 Encl Frame Porch	1980	40	2 110	3	0 %	100 %	
68 Wood Deck	1990	140	2 100	3	0 %	100 %	
1 One Story Frame	1970	48	2 110	3	0 %	100 %	
23 Frame Garage	1970	240	2 105	2	0 %	90 %	
24 Frame Shed	1980	272	2 100	2	0 %	90 %	
24 Frame Shed	0				%	%	1,000
24 Frame Shed	0				%	%	1,000
					%	%	
					%	%	

1.One Story Fram
2.Two Story Fram
3.Three Story Fr
4.1 & 1/2 Story
5.1 & 3/4 Story
6.2 & 1/2 Story
21.Open Frame Por
22.Encl Frame Por
23.Frame Garage
24.Frame Shed
25.Frame Bay Wind
26.1SFr Overhang
27.Unfin Basement
28.Unfinished Att
29.Finished Attic

Map Lot 008-020 Account 623 Location TABOR ROAD Card 1 Of 1 8/23/2023

GOUGH, ROBERT
PO BOX 403
MAPLETON ME 04757

B6067P315

Previous Owner
PLISSEY, MARILYN B
C/O STEVE PLISSEY
601 YOHO HEAD ROAD
MACHIASPORT ME 04655
Sale Date: 9/21/2020

Inspection Witnessed By:

X Date

No./Date	Description	Date Insp.

Notes:

Washburn

Property Data

Neighborhood	**1 Neighborhood One**
Tree Growth Year	**0**
1ST MORTGAGE	**0**
2ND MORTGAGE	**0**
Zone/Land Use	**1 Residential**
Secondary Zone	
Topography	**1 Level**

1.Level	4.Below St	7.LevelBog
2.Rolling	5.Low	8.
3.Above St	6.Swampy	9.

Utilities

1.Public	4.Dr Well	7.Cesspool
2.Water	5.Dug Well	8.
3.Sewer	6.Septic	9.None

Street **1 Paved**

1.Paved	4.Proposed	7.
2.Semi Imp	5.R/O/W	8.
3.Gravel	6.	9.None

TG PLAN YEAR	**0**
Tif District #	**0**

Sale Data

Sale Date	**9/21/2020**
Price	**100,000**
Sale Type	**1 Land Only**

1.Land	4.Mobile	7.C/I L&B
2.L & B	5.Other	8.
3.Building	6.C/I Land	9.

Financing **9 Unknown**

1.Convent	4.Seller	7.
2.FHA/VA	5.Private	8.
3.Assumed	6.Cash	9.Unknown

Validity **4 Split/Assemblage**

1.Valid	4.Split	7.Renovate
2.Related	5.Partial	8.Other
3.Distress	6.Exempt	9.

Verified **5 Public Record**

1.Buyer	4.Agent	7.Family
2.Seller	5.Pub Rec	8.Other
3.Lender	6.MLS	9.

Assessment Record

Year	Land	Buildings	Exempt	Total
2012	24,900	0	0	24,900
2013	32,400	0	0	32,400
2015	32,400	0	0	32,400
2018	32,400	0	0	32,400
2019	61,000	0	0	61,000
2020	61,000	0	0	61,000
2021	61,000	0	0	61,000
2022	61,000	0	0	61,000
2023	63,400	0	0	63,400

Land Data

Front Foot	Type	Effective Frontage	Effective Depth	Influence Factor	Influence Code
11.Regular Lot				%	
12.Delta Triangle				%	
13.Nabla Triangle				%	
14.Rear Land				%	
15.Class I Road				%	
				%	
				%	
Square Foot		**Square Feet**			
16.Class II Road				%	
17.Municipal Rese				%	
18.Munic Sep Lago				%	
19.Gravel Pit				%	
20.Industrial Bas				%	
				%	
				%	
Fract. Acre		**Acreage/Sites**			
21.Developed Pave	28	30.00	100	%	0
22.Undev Paved (F	31	46.00	100	%	0
23.Developed Grav				%	
Acres				%	
24.Undev Gravel (				%	
25.Comm Base Pave				%	
26.Comm Base Grav				%	
27.Backlot				%	
28.Rear Land				%	
29.Pavement				%	

Total Acreage 76.00

Influence Codes

1.Unimproved
2.Excess Frtg
3.Topography
4.Size/Shape
5.Access
6.Restriction
7.Open Space
8.View/Environ
9.Fract Share
Acres
30.Utility R O W
31.Tillable
32.Pasture
33.Orchard
34.Softwood F&O
35.Mixed Wood F&O
36.Hardwood F&O
37.Softwood TG
38.Mixed Wood TG
39.Hardwood TG
40.Wasteland
41.Open Space
42.Mobile Home Si
43.Condo Site
44.Lot Improvemen
45.Subdivision Lo
46.Heavy Ind Sit

Washburn

Map Lot 008-020 | Account 623 | Location TABOR ROAD | Card 1 Of 1 | 8/23/2023

Building Style **0**		
1.Conv.	5.Garrison	9.Gambrel
2.Ranch	6.Salt Box	10.Other
3.R Ranch	7.Contemp	11.Split
4.Cape	8.Log	12.
Dwelling Units **0**		
Other Units **0**		
Stories **0**		
1.1	4.1.5	7.
2.2	5.1.75	8.
3.3	6.2.5	9.
Exterior Walls **0**		
1.Wood	5.Stucco	9.T-111
2.Vin/Al	6.Brick	10.Other
3.Compos.	7.Stone	11.
4.Asbestos	8.Concrete	12.
Roof Surface **0**		
1.Asphalt	4.Composit	7.
2.Slate	5.Wood	8.
3.Metal	6.Other	9.
SF Masonry Trim **0**		
OPEN-3-CUSTOM **0**		
OPEN-4-CUSTOM **0**		
Year Built **0**		
Year Remodeled **0**		
Foundation **0**		
1.Concrete	4.Wood	7.
2.C Block	5.Slab	8.
3.Br/Stone	6.Piers	9.
Basement **0**		
1.1/4 Bmt	4.Full Bmt	7.
2.1/2 Bmt	5.None	8.
3.3/4 Bmt	6.	9.None
Bsmt Gar # Cars **0**		
Wet Basement **0**		
1.Dry	4.	7.
2.Damp	5.	8.
3.Wet	6.	9.

SF Bsmt Living **0**		
Fin Bsmt Grade **0 0**		
OPEN 5 OPTIONAL **0**		
Heat Type **100%** **0**		
1.HWBB	5.FWA	9.No Heat
2.HWCI	6.GravWA	10.
3.H Pump	7.Electric	11.
4.Steam	8.Fl/Wall	12.
Cool Type **0%** **9 None**		
1.Refrig	4.W&C Air	7.
2.Evapor	5.	8.
3.H Pump	6.	9.None
Kitchen Style **0**		
1.Modern	4.Obsolete	7.
2.Typical	5.	8.
3.Old Type	6.	9.None
Bath(s) Style **0**		
1.Modern	4.Obsolete	7.
2.Typical	5.	8.
3.Old Type	6.	9.None
# Rooms **0**		
# Bedrooms **0**		
# Full Baths **0**		
# Half Baths **0**		
# Addn Fixtures **0**		
# Fireplaces **0**		

TRIO Software
A Division of Harris Computer Systems

Layout **0**		
1.Typical	4.	7.
2.Inadeq	5.	8.
3.Poor	6.	9.
Attic **0**		
1.1/4 Fin	4.Full Fin	7.
2.1/2 Fin	5.Fl/Stair	8.
3.3/4 Fin	6.	9.None
Insulation **0**		
1.Full	4.Minimal	7.
2.Heavy	5.Partial	8.
3.Capped	6.	9.None
Unfinished % **0%**		
Grade & Factor **0 0%**		
1.E Grade	4.B Grade	7.
2.D Grade	5.A Grade	8.SC Grade
3.C Grade	6.AA Grade	9.Same
SQFT (Footprint) **0**		
Condition **0**		
1.Poor	4.Avg	7.V G
2.Fair	5.Avg+	8.Exc
3.Avg-	6.Good	9.Same
Phys. % Good **0%**		
Funct. % Good **100%**		
Functional Code **9 None**		
1.Incomp	4.Delap	7.No Power
2.O-Built	5.Bsmt	8.LongTerm
3.Damage	6.Common	9.None
Econ. % Good **100%**		
Economic Code **None**		
0.None	3.No Power	7.
1.Location	4.Generate	8.
2.Encroach	9.None	9.
Entrance Code **0**		
1.Interior	4.Vacant	7.
2.Refusal	5.Estimate	8.
3.Informed	6.Reviewed	9.
Information Code **0**		
1.Owner	4.Agent	7.
2.Relative	5.Estimate	8.
3.Tenant	6.Other	9.

Date Inspected

Additions, Outbuildings & Improvements

Type	Year	Units	Grade	Cond	Phys.	Funct.	Sound Value
					%	%	
					%	%	
					%	%	
					%	%	
					%	%	
					%	%	
					%	%	
					%	%	
					%	%	
					%	%	

1.One Story Fram
2.Two Story Fram
3.Three Story Fr
4.1 & 1/2 Story
5.1 & 3/4 Story
6.2 & 1/2 Story
21.Open Frame Por
22.Encl Frame Por
23.Frame Garage
24.Frame Shed
25.Frame Bay Wind
26.1SFr Overhang
27.Unfin Basement
28.Unfinished Att
29.Finished Attic

Map Lot 008-020A | Account 179 | Location 347 TABOR ROAD | Card 1 Of 1 | 8/23/2023

Haley, Tammy R
Haley, Winfield
347 Tabor Road
Washburn ME 04786

B5762P17

Previous Owner
WJV HOLDINGS LLC
212 NORTH MAIN STREET

WINTER GARDEN FL 34787
Sale Date: 4/05/2018

Previous Owner
VAUGHAN, WAYNE E.
VAUGHAN, JEANITA
212 NORTH MAIN STREET
WINTER GARDEN FL 34787
Sale Date: 10/04/2017

Previous Owner
Wright, Wayne W.
P.O. Box 88

Ellsworth ME
Sale Date: 8/30/2011

Inspection Witnessed By:

X Date

No./Date	Description	Date Insp.

Notes:

Washburn

Property Data

Neighborhood	**1 Neighborhood One**
Tree Growth Year	**0**
1ST MORTGAGE	**0**
2ND MORTGAGE	**0**
Zone/Land Use	**1 Residential**
Secondary Zone	
Topography	**2 Rolling**

1.Level	4.Below St	7.LevelBog
2.Rolling	5.Low	8.
3.Above St	6.Swampy	9.

Utilities	**4 Drilled Well**	**6 Septic System**

1.Public	4.Dr Well	7.Cesspool
2.Water	5.Dug Well	8.
3.Sewer	6.Septic	9.None

Street	**1 Paved**

1.Paved	4.Proposed	7.
2.Semi Imp	5.R/O/W	8.
3.Gravel	6.	9.None

TG PLAN YEAR	**0**
Tif District #	**0**

Sale Data

Sale Date	**4/05/2018**
Price	**49,999**
Sale Type	**2 Land & Buildings**

1.Land	4.Mobile	7.C/I L&B
2.L & B	5.Other	8.
3.Building	6.C/I Land	9.

Financing	**9 Unknown**

1.Convent	4.Seller	7.
2.FHA/VA	5.Private	8.
3.Assumed	6.Cash	9.Unknown

Validity	**3 Distressed Sale**

1.Valid	4.Split	7.Renovate
2.Related	5.Partial	8.Other
3.Distress	6.Exempt	9.

Verified	**5 Public Record**

1.Buyer	4.Agent	7.Family
2.Seller	5.Pub Rec	8.Other
3.Lender	6.MLS	9.

Assessment Record

Year	Land	Buildings	Exempt	Total
2012	5,900	26,200	0	32,100
2013	7,600	26,200	0	33,800
2015	7,600	26,200	0	33,800
2018	7,600	26,200	0	33,800
2019	16,500	56,100	0	72,600
2020	16,500	56,100	25,000	47,600
2021	16,500	56,100	25,000	47,600
2022	16,500	58,800	25,000	50,300
2023	22,000	69,800	25,000	66,800

Land Data

Front Foot	Type	Effective Frontage	Effective Depth	Influence Factor	Influence Code
11.Regular Lot				%	
12.Delta Triangle				%	
13.Nabla Triangle				%	
14.Rear Land				%	
15.Class I Road				%	
				%	
				%	
Square Foot		**Square Feet**			
16.Class II Road				%	
17.Municipal Rese				%	
18.Munic Sep Lago				%	
19.Gravel Pit				%	
20.Industrial Bas				%	
				%	
				%	
Fract. Acre		**Acreage/Sites**			
21.Developed Pave	21	1.00		100 %	0
22.Undev Paved (F				%	
23.Developed Grav				%	
Acres				%	
24.Undev Gravel (				%	
25.Comm Base Pave				%	
26.Comm Base Grav				%	
27.Backlot				%	
28.Rear Land				%	
29.Pavement				%	

Total Acreage 1.00

Influence Codes

1.Unimproved
2.Excess Frtg
3.Topography
4.Size/Shape
5.Access
6.Restriction
7.Open Space
8.View/Environ
9.Fract Share
Acres
30.Utility R O W
31.Tillable
32.Pasture
33.Orchard
34.Softwood F&O
35.Mixed Wood F&O
36.Hardwood F&O
37.Softwood TG
38.Mixed Wood TG
39.Hardwood TG
40.Wasteland
41.Open Space
42.Mobile Home Si
43.Condo Site
44.Lot Improvemen
45.Subdivision Lo
46.Heavy Ind Sit

Washburn

Map Lot 008-020A | Account 179 | Location 347 TABOR ROAD | Card 1 Of 1 | 8/23/2023

Building Style	**2 Ranch**		
1.Conv.	5.Garrison	9.Gambrel	
2.Ranch	6.Salt Box	10.Other	
3.R Ranch	7.Contemp	11.Split	
4.Cape	8.Log	12.	
Dwelling Units	**1**		
Other Units	**0**		
Stories	**1 One Story**		
1.1	4.1.5	7.	
2.2	5.1.75	8.	
3.3	6.2.5	9.	
Exterior Walls	**1 Wood Siding**		
1.Wood	5.Stucco	9.T-111	
2.Vin/Al	6.Brick	10.Other	
3.Compos.	7.Stone	11.	
4.Asbestos	8.Concrete	12.	
Roof Surface	**1 Asphalt Shingles**		
1.Asphalt	4.Composit	7.	
2.Slate	5.Wood	8.	
3.Metal	6.Other	9.	
SF Masonry Trim	**0**		
OPEN-3-CUSTOM	**0**		
OPEN-4-CUSTOM	**0**		
Year Built	**1970**		
Year Remodeled	**0**		
Foundation	**1 Concrete**		
1.Concrete	4.Wood	7.	
2.C Block	5.Slab	8.	
3.Br/Stone	6.Piers	9.	
Basement	**4 Full Basement**		
1.1/4 Bmt	4.Full Bmt	7.	
2.1/2 Bmt	5.None	8.	
3.3/4 Bmt	6.	9.None	
Bsmt Gar # Cars	**0**		
Wet Basement	**1 Dry Basement**		
1.Dry	4.	7.	
2.Damp	5.	8.	
3.Wet	6.	9.	

SF Bsmt Living	**0**		
Fin Bsmt Grade	**0 0**		
OPEN 5 OPTIONAL	**0**		
Heat Type	**100%**	**5 Forced Warm Air**	
1.HWBB	5.FWA	9.No Heat	
2.HWCI	6.GravWA	10.	
3.H Pump	7.Electric	11.	
4.Steam	8.Fl/Wall	12.	
Cool Type	**0%**	**9 None**	
1.Refrig	4.W&C Air	7.	
2.Evapor	5.	8.	
3.H Pump	6.	9.None	
Kitchen Style	**2 Typical**		
1.Modern	4.Obsolete	7.	
2.Typical	5.	8.	
3.Old Type	6.	9.None	
Bath(s) Style	**2 Typical Bath(s)**		
1.Modern	4.Obsolete	7.	
2.Typical	5.	8.	
3.Old Type	6.	9.None	
# Rooms	**9**		
# Bedrooms	**4**		
# Full Baths	**1**		
# Half Baths	**0**		
# Addn Fixtures	**0**		
# Fireplaces	**0**		

TRIO Software
A Division of Harris Computer Systems

Layout	**1 Typical**		
1.Typical	4.	7.	
2.Inadeq	5.	8.	
3.Poor	6.	9.	
Attic	**9 None**		
1.1/4 Fin	4.Full Fin	7.	
2.1/2 Fin	5.Fl/Stair	8.	
3.3/4 Fin	6.	9.None	
Insulation	**1 Full**		
1.Full	4.Minimal	7.	
2.Heavy	5.Partial	8.	
3.Capped	6.	9.None	
Unfinished %	**0%**		
Grade & Factor	**2 Fair 110%**		
1.E Grade	4.B Grade	7.	
2.D Grade	5.A Grade	8.SC Grade	
3.C Grade	6.AA Grade	9.Same	
SQFT (Footprint)	**1507**		
Condition	**3 Below Average**		
1.Poor	4.Avg	7.V G	
2.Fair	5.Avg+	8.Exc	
3.Avg-	6.Good	9.Same	
Phys. % Good	**0%**		
Funct. % Good	**100%**		
Functional Code	**9 None**		
1.Incomp	4.Delap	7.No Power	
2.O-Built	5.Bsmt	8.LongTerm	
3.Damage	6.Common	9.None	
Econ. % Good	**100%**		
Economic Code	**None**		
0.None	3.No Power	7.	
1.Location	4.Generate	8.	
2.Encroach	9.None	9.	
Entrance Code	**3 Information Only**		
1.Interior	4.Vacant	7.	
2.Refusal	5.Estimate	8.	
3.Informed	6.Reviewed	9.	
Information Code	**1 Owner**		
1.Owner	4.Agent	7.	
2.Relative	5.Estimate	8.	
3.Tenant	6.Other	9.	

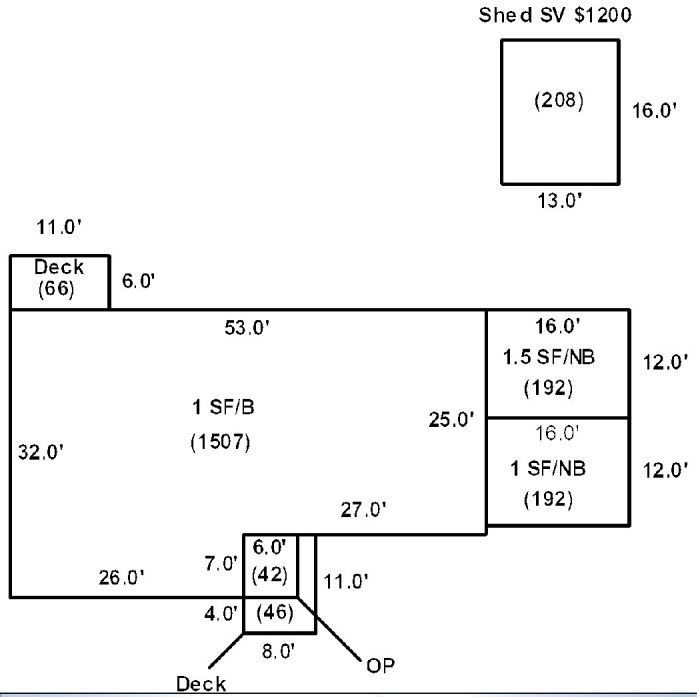

Date Inspected 10/19/2018

Additions, Outbuildings & Improvements

Type	Year	Units	Grade	Cond	Phys.	Funct.	Sound Value
68 Wood Deck	1990	66	2 100	2	0 %	100 %	
21 Open Frame	1970	42	2 110	3	0 %	100 %	
68 Wood Deck	1990	46	2 110	3	0 %	100 %	
1 One Story Frame	1990	192	2 110	4	0 %	100 %	
4 1 & 1/2 Story Fr	1990	192	2 110	4	0 %	70 %	
24 Frame Shed	0				%	%	1,200
					%	%	
					%	%	
					%	%	
					%	%	

1.One Story Fram
2.Two Story Fram
3.Three Story Fr
4.1 & 1/2 Story
5.1 & 3/4 Story
6.2 & 1/2 Story
21.Open Frame Por
22.Encl Frame Por
23.Frame Garage
24.Frame Shed
25.Frame Bay Wind
26.1SFr Overhang
27.Unfin Basement
28.Unfinished Att
29.Finished Attic

Map Lot 008-021 | Account 975 | Location TABOR ROAD | Card 1 Of 1 | 8/23/2023

TURNER, LAURA HILL
1232 Main Street
Washburn ME 04786

B6337P320

Previous Owner
TURNER, BRENDA J
1653 WASHBURN ROAD

WASHBURN ME 04786
Sale Date: 6/24/2022

Inspection Witnessed By:

X Date

No./Date	Description	Date Insp.

Notes:

Washburn

Property Data

Neighborhood	**1 Neighborhood One**
Tree Growth Year	**0**
1ST MORTGAGE	**0**
2ND MORTGAGE	**0**
Zone/Land Use	**1 Residential**
Secondary Zone	
Topography	**2 Rolling**

1.Level	4.Below St	7.LevelBog
2.Rolling	5.Low	8.
3.Above St	6.Swampy	9.

Utilities

1.Public	4.Dr Well	7.Cesspool
2.Water	5.Dug Well	8.
3.Sewer	6.Septic	9.None

Street **1 Paved**

1.Paved	4.Proposed	7.
2.Semi Imp	5.R/O/W	8.
3.Gravel	6.	9.None

TG PLAN YEAR	**0**
Tif District #	**0**

Sale Data

Sale Date	**6/24/2022**
Price	**414,000**

Sale Type **1 Land Only**

1.Land	4.Mobile	7.C/I L&B
2.L & B	5.Other	8.
3.Building	6.C/I Land	9.

Financing **1 Conventional**

1.Convent	4.Seller	7.
2.FHA/VA	5.Private	8.
3.Assumed	6.Cash	9.Unknown

Validity **2 Related Parties**

1.Valid	4.Split	7.Renovate
2.Related	5.Partial	8.Other
3.Distress	6.Exempt	9.

Verified **5 Public Record**

1.Buyer	4.Agent	7.Family
2.Seller	5.Pub Rec	8.Other
3.Lender	6.MLS	9.

Assessment Record

Year	Land	Buildings	Exempt	Total
2012	10,300	0	0	10,300
2013	13,300	0	0	13,300
2015	13,300	0	0	13,300
2018	13,300	0	0	13,300
2019	23,500	0	0	23,500
2020	23,500	0	0	23,500
2021	23,500	0	0	23,500
2022	23,500	0	0	23,500
2023	24,900	0	0	24,900

Land Data

Front Foot	Type	Effective Frontage	Effective Depth	Influence Factor	Influence Code
11.Regular Lot				%	
12.Delta Triangle				%	
13.Nabla Triangle				%	
14.Rear Land				%	
15.Class I Road				%	
				%	
				%	
Square Foot		**Square Feet**			
16.Class II Road				%	
17.Municipal Rese				%	
18.Munic Sep Lago				%	
19.Gravel Pit				%	
20.Industrial Bas				%	
				%	
				%	
Fract. Acre		**Acreage/Sites**			
21.Developed Pave	31	15.00	100	%	0
22.Undev Paved (F	28	17.00	100	%	0
23.Developed Grav				%	
Acres				%	
24.Undev Gravel (				%	
25.Comm Base Pave				%	
26.Comm Base Grav				%	
27.Backlot				%	
28.Rear Land				%	
29.Pavement				%	

Total Acreage 32.00

Influence Codes

1.Unimproved
2.Excess Frtg
3.Topography
4.Size/Shape
5.Access
6.Restriction
7.Open Space
8.View/Environ
9.Fract Share
Acres
30.Utility R O W
31.Tillable
32.Pasture
33.Orchard
34.Softwood F&O
35.Mixed Wood F&O
36.Hardwood F&O
37.Softwood TG
38.Mixed Wood TG
39.Hardwood TG
40.Wasteland
41.Open Space
42.Mobile Home Si
43.Condo Site
44.Lot Improvemen
45.Subdivision Lo
46.Heavy Ind Sit

Washburn

Map Lot 008-021 | Account 975 | Location TABOR ROAD | Card 1 Of 1 | 8/23/2023

Building Style **0**		
1.Conv.	5.Garrison	9.Gambrel
2.Ranch	6.Salt Box	10.Other
3.R Ranch	7.Contemp	11.Split
4.Cape	8.Log	12.
Dwelling Units **0**		
Other Units **0**		
Stories **0**		
1.1	4.1.5	7.
2.2	5.1.75	8.
3.3	6.2.5	9.
Exterior Walls **0**		
1.Wood	5.Stucco	9.T-111
2.Vin/Al	6.Brick	10.Other
3.Compos.	7.Stone	11.
4.Asbestos	8.Concrete	12.
Roof Surface **0**		
1.Asphalt	4.Composit	7.
2.Slate	5.Wood	8.
3.Metal	6.Other	9.
SF Masonry Trim **0**		
OPEN-3-CUSTOM **0**		
OPEN-4-CUSTOM **0**		
Year Built **0**		
Year Remodeled **0**		
Foundation **0**		
1.Concrete	4.Wood	7.
2.C Block	5.Slab	8.
3.Br/Stone	6.Piers	9.
Basement **0**		
1.1/4 Bmt	4.Full Bmt	7.
2.1/2 Bmt	5.None	8.
3.3/4 Bmt	6.	9.None
Bsmt Gar # Cars **0**		
Wet Basement **0**		
1.Dry	4.	7.
2.Damp	5.	8.
3.Wet	6.	9.

SF Bsmt Living **0**		
Fin Bsmt Grade **0 0**		
OPEN 5 OPTIONAL **0**		
Heat Type **100%** **0**		
1.HWBB	5.FWA	9.No Heat
2.HWCI	6.GravWA	10.
3.H Pump	7.Electric	11.
4.Steam	8.Fl/Wall	12.
Cool Type **0%** **9 None**		
1.Refrig	4.W&C Air	7.
2.Evapor	5.	8.
3.H Pump	6.	9.None
Kitchen Style **0**		
1.Modern	4.Obsolete	7.
2.Typical	5.	8.
3.Old Type	6.	9.None
Bath(s) Style **0**		
1.Modern	4.Obsolete	7.
2.Typical	5.	8.
3.Old Type	6.	9.None
# Rooms **0**		
# Bedrooms **0**		
# Full Baths **0**		
# Half Baths **0**		
# Addn Fixtures **0**		
# Fireplaces **0**		

TRIO Software
A Division of Harris Computer Systems

Layout **0**		
1.Typical	4.	7.
2.Inadeq	5.	8.
3.Poor	6.	9.
Attic **0**		
1.1/4 Fin	4.Full Fin	7.
2.1/2 Fin	5.Fl/Stair	8.
3.3/4 Fin	6.	9.None
Insulation **0**		
1.Full	4.Minimal	7.
2.Heavy	5.Partial	8.
3.Capped	6.	9.None
Unfinished % **0%**		
Grade & Factor **0 0%**		
1.E Grade	4.B Grade	7.
2.D Grade	5.A Grade	8.SC Grade
3.C Grade	6.AA Grade	9.Same
SQFT (Footprint) **0**		
Condition **0**		
1.Poor	4.Avg	7.V G
2.Fair	5.Avg+	8.Exc
3.Avg-	6.Good	9.Same
Phys. % Good **0%**		
Funct. % Good **100%**		
Functional Code **9 None**		
1.Incomp	4.Delap	7.No Power
2.O-Built	5.Bsmt	8.LongTerm
3.Damage	6.Common	9.None
Econ. % Good **100%**		
Economic Code **None**		
0.None	3.No Power	7.
1.Location	4.Generate	8.
2.Encroach	9.None	9.
Entrance Code **0**		
1.Interior	4.Vacant	7.
2.Refusal	5.Estimate	8.
3.Informed	6.Reviewed	9.
Information Code **0**		
1.Owner	4.Agent	7.
2.Relative	5.Estimate	8.
3.Tenant	6.Other	9.

Date Inspected

Additions, Outbuildings & Improvements

Type	Year	Units	Grade	Cond	Phys.	Funct.	Sound Value
					%	%	
					%	%	
					%	%	
					%	%	
					%	%	
					%	%	
					%	%	
					%	%	
					%	%	
					%	%	

1.One Story Fram
2.Two Story Fram
3.Three Story Fr
4.1 & 1/2 Story
5.1 & 3/4 Story
6.2 & 1/2 Story
21.Open Frame Por
22.Encl Frame Por
23.Frame Garage
24.Frame Shed
25.Frame Bay Wind
26.1SFr Overhang
27.Unfin Basement
28.Unfinished Att
29.Finished Attic

Map Lot 008-022 | Account 972 | Location 267 TABOR ROAD | Card 1 Of 1 | 8/23/2023

ANDERSON, DEANNA
267 TABOR ROAD
WASHBURN ME 04786

B5899P317

Previous Owner
TURNER, BRUCE
PO BOX 123

WASHBURN ME 04786
Sale Date: 6/10/2019

Inspection Witnessed By:

X Date

No./Date	Description	Date Insp.

Notes:

* Added garage and correct mailing address for 2021.
4-7-2021 ED

Washburn

Property Data

Neighborhood **1 Neighborhood One**

Tree Growth Year **0**

1ST MORTGAGE **0**

2ND MORTGAGE **0**

Zone/Land Use **1 Residential**

Secondary Zone

Topography **2 Rolling**

1.Level	4.Below St	7.LevelBog
2.Rolling	5.Low	8.
3.Above St	6.Swampy	9.

Utilities **4 Drilled Well** **6 Septic System**

1.Public	4.Dr Well	7.Cesspool
2.Water	5.Dug Well	8.
3.Sewer	6.Septic	9.None

Street **1 Paved**

1.Paved	4.Proposed	7.
2.Semi Imp	5.R/O/W	8.
3.Gravel	6.	9.None

TG PLAN YEAR **0**

Tif District # **0**

Sale Data

Sale Date **6/10/2019**

Price **58,000**

Sale Type **2 Land & Buildings**

1.Land	4.Mobile	7.C/I L&B
2.L & B	5.Other	8.
3.Building	6.C/I Land	9.

Financing **9 Unknown**

1.Convent	4.Seller	7.
2.FHA/VA	5.Private	8.
3.Assumed	6.Cash	9.Unknown

Validity **3 Distressed Sale**

1.Valid	4.Split	7.Renovate
2.Related	5.Partial	8.Other
3.Distress	6.Exempt	9.

Verified **5 Public Record**

1.Buyer	4.Agent	7.Family
2.Seller	5.Pub Rec	8.Other
3.Lender	6.MLS	9.

Assessment Record

Year	Land	Buildings	Exempt	Total
2012	5,900	50,200	8,800	47,300
2013	7,600	54,000	8,800	52,800
2015	7,600	54,000	9,000	52,600
2018	7,600	54,000	18,400	43,200
2019	16,500	52,600	0	69,100
2020	16,500	52,600	0	69,100
2021	16,500	68,900	25,000	60,400
2022	16,500	72,300	25,000	63,800
2023	22,000	85,900	25,000	82,900

Land Data

Front Foot	Type	Effective Frontage	Effective Depth	Influence Factor	Influence Code
11.Regular Lot				%	
12.Delta Triangle				%	
13.Nabla Triangle				%	
14.Rear Land				%	
15.Class I Road				%	
				%	
				%	
Square Foot		**Square Feet**			
16.Class II Road				%	
17.Municipal Rese				%	
18.Munic Sep Lago				%	
19.Gravel Pit				%	
20.Industrial Bas				%	
				%	
				%	
Fract. Acre		**Acreage/Sites**			
21.Developed Pave	21	1.00		100 %	0
22.Undev Paved (F				%	
23.Developed Grav				%	
Acres				%	
24.Undev Gravel (				%	
25.Comm Base Pave				%	
26.Comm Base Grav				%	
27.Backlot				%	
28.Rear Land				%	
29.Pavement				%	

Total Acreage 1.00

Influence Codes

1.Unimproved
2.Excess Frtg
3.Topography
4.Size/Shape
5.Access
6.Restriction
7.Open Space
8.View/Environ
9.Fract Share
Acres
30.Utility R O W
31.Tillable
32.Pasture
33.Orchard
34.Softwood F&O
35.Mixed Wood F&O
36.Hardwood F&O
37.Softwood TG
38.Mixed Wood TG
39.Hardwood TG
40.Wasteland
41.Open Space
42.Mobile Home Si
43.Condo Site
44.Lot Improvemen
45.Subdivision Lo
46.Heavy Ind Sit

Washburn

Map Lot 008-022 | Account 972 | Location 267 TABOR ROAD | Card 1 Of 1 | 8/23/2023

Building Style	**4 Cape Cod**	
1.Conv.	5.Garrison	9.Gambrel
2.Ranch	6.Salt Box	10.Other
3.R Ranch	7.Contemp	11.Split
4.Cape	8.Log	12.
Dwelling Units	**1**	
Other Units	**0**	
Stories	**4 One & 1/2 Story**	
1.1	4.1.5	7.
2.2	5.1.75	8.
3.3	6.2.5	9.
Exterior Walls	**2 Vinyl/Aluminum**	
1.Wood	5.Stucco	9.T-111
2.Vin/Al	6.Brick	10.Other
3.Compos.	7.Stone	11.
4.Asbestos	8.Concrete	12.
Roof Surface	**3 Sheet Metal**	
1.Asphalt	4.Composit	7.
2.Slate	5.Wood	8.
3.Metal	6.Other	9.
SF Masonry Trim	**0**	
OPEN-3-CUSTOM	**0**	
OPEN-4-CUSTOM	**0**	
Year Built	**1900**	
Year Remodeled	**0**	
Foundation	**1 Concrete**	
1.Concrete	4.Wood	7.
2.C Block	5.Slab	8.
3.Br/Stone	6.Piers	9.
Basement	**4 Full Basement**	
1.1/4 Bmt	4.Full Bmt	7.
2.1/2 Bmt	5.None	8.
3.3/4 Bmt	6.	9.None
Bsmt Gar # Cars	**0**	
Wet Basement	**1 Dry Basement**	
1.Dry	4.	7.
2.Damp	5.	8.
3.Wet	6.	9.

SF Bsmt Living	**0**	
Fin Bsmt Grade	**0 0**	
OPEN 5 OPTIONAL	**0**	
Heat Type	**100%**	**1 Hot Water BB**
1.HWBB	5.FWA	9.No Heat
2.HWCI	6.GravWA	10.
3.H Pump	7.Electric	11.
4.Steam	8.Fl/Wall	12.
Cool Type	**0%**	**9 None**
1.Refrig	4.W&C Air	7.
2.Evapor	5.	8.
3.H Pump	6.	9.None
Kitchen Style	**2 Typical**	
1.Modern	4.Obsolete	7.
2.Typical	5.	8.
3.Old Type	6.	9.None
Bath(s) Style	**2 Typical Bath(s)**	
1.Modern	4.Obsolete	7.
2.Typical	5.	8.
3.Old Type	6.	9.None
# Rooms	**6**	
# Bedrooms	**3**	
# Full Baths	**1**	
# Half Baths	**1**	
# Addn Fixtures	**0**	
# Fireplaces	**0**	

TRIO Software
A Division of Harris Computer Systems

Layout	**1 Typical**	
1.Typical	4.	7.
2.Inadeq	5.	8.
3.Poor	6.	9.
Attic	**9 None**	
1.1/4 Fin	4.Full Fin	7.
2.1/2 Fin	5.Fl/Stair	8.
3.3/4 Fin	6.	9.None
Insulation	**1 Full**	
1.Full	4.Minimal	7.
2.Heavy	5.Partial	8.
3.Capped	6.	9.None
Unfinished %	**0%**	
Grade & Factor	**2 Fair 110%**	
1.E Grade	4.B Grade	7.
2.D Grade	5.A Grade	8.SC Grade
3.C Grade	6.AA Grade	9.Same
SQFT (Footprint)	**884**	
Condition	**5 Above Average**	
1.Poor	4.Avg	7.V G
2.Fair	5.Avg+	8.Exc
3.Avg-	6.Good	9.Same
Phys. % Good	**0%**	
Funct. % Good	**100%**	
Functional Code	**9 None**	
1.Incomp	4.Delap	7.No Power
2.O-Built	5.Bsmt	8.LongTerm
3.Damage	6.Common	9.None
Econ. % Good	**100%**	
Economic Code	**None**	
0.None	3.No Power	7.
1.Location	4.Generate	8.
2.Encroach	9.None	9.
Entrance Code	**5 Estimated**	
1.Interior	4.Vacant	7.
2.Refusal	5.Estimate	8.
3.Informed	6.Reviewed	9.
Information Code	**5 Estimate**	
1.Owner	4.Agent	7.
2.Relative	5.Estimate	8.
3.Tenant	6.Other	9.

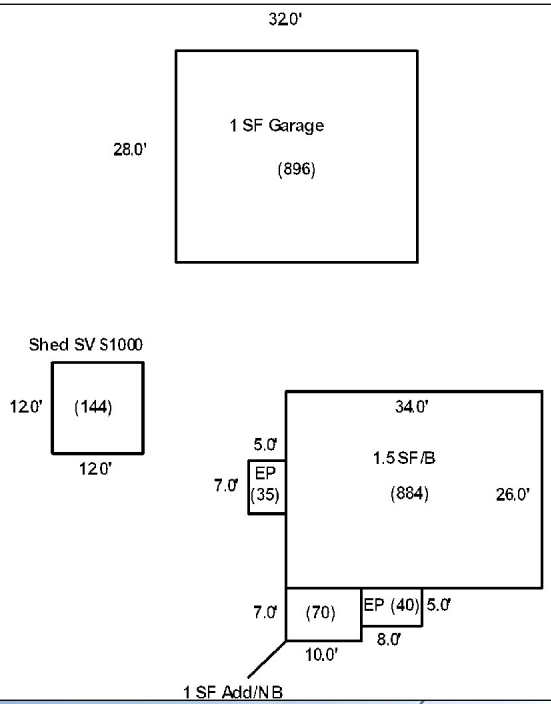

Date Inspected 10/19/2018

Additions, Outbuildings & Improvements

Type	Year	Units	Grade	Cond	Phys.	Funct.	Sound Value
22 Encl Frame Porch	1970	40	2 115	4	0 %	100 %	
1 One Story Frame	1980	70	3 90	4	0 %	100 %	
22 Encl Frame Porch	1980	35	2 110	4	0 %	100 %	
24 Frame Shed	0				%	%	1,000
23 Frame Garage	2020	896	3 105	4	0 %	100 %	
					%	%	
					%	%	
					%	%	
					%	%	
					%	%	

1.One Story Fram
2.Two Story Fram
3.Three Story Fr
4.1 & 1/2 Story
5.1 & 3/4 Story
6.2 & 1/2 Story
21.Open Frame Por
22.Encl Frame Por
23.Frame Garage
24.Frame Shed
25.Frame Bay Wind
26.1SFr Overhang
27.Unfin Basement
28.Unfinished Att
29.Finished Attic

Map Lot 008-022A | Account 155 | Location 24 TABOR ROAD | Card 1 Of 1 | 8/23/2023

TURNER, CYNTHIA E
30 TABOR ROAD
WASHBURN ME 04786

B1623P24 B5134P148

Property Data

Neighborhood **1 Neighborhood One**

Tree Growth Year **0**

1ST MORTGAGE **0**

2ND MORTGAGE **0**

Zone/Land Use **1 Residential**

Secondary Zone

Topography **1 Level**

1.Level	4.Below St	7.LevelBog
2.Rolling	5.Low	8.
3.Above St	6.Swampy	9.

Utilities

1.Public	4.Dr Well	7.Cesspool
2.Water	5.Dug Well	8.
3.Sewer	6.Septic	9.None

Street **1 Paved**

1.Paved	4.Proposed	7.
2.Semi Imp	5.R/O/W	8.
3.Gravel	6.	9.None

TG PLAN YEAR **0**

Tif District # **0**

Sale Data

Sale Date **11/08/1982**

Price

Sale Type **1 Land Only**

1.Land	4.Mobile	7.C/I L&B
2.L & B	5.Other	8.
3.Building	6.C/I Land	9.

Financing

1.Convent	4.Seller	7.
2.FHA/VA	5.Private	8.
3.Assumed	6.Cash	9.Unknown

Validity **2 Related Parties**

1.Valid	4.Split	7.Renovate
2.Related	5.Partial	8.Other
3.Distress	6.Exempt	9.

Verified **5 Public Record**

1.Buyer	4.Agent	7.Family
2.Seller	5.Pub Rec	8.Other
3.Lender	6.MLS	9.

Assessment Record

Year	Land	Buildings	Exempt	Total
2012	34,300	13,200	0	47,500
2013	44,600	0	0	44,600
2015	44,600	0	0	44,600
2018	44,600	0	0	44,600
2019	62,500	0	0	62,500
2020	62,500	0	0	62,500
2021	62,100	0	0	62,100
2022	62,100	0	0	62,100
2023	72,100	0	0	72,100

Land Data

Front Foot	Type	Effective Frontage	Effective Depth	Influence Factor	Influence Code
11.Regular Lot				%	
12.Delta Triangle				%	
13.Nabla Triangle				%	
14.Rear Land				%	
15.Class I Road				%	
				%	
				%	
Square Foot		**Square Feet**			
16.Class II Road				%	
17.Municipal Rese				%	
18.Munic Sep Lago				%	
19.Gravel Pit				%	
20.Industrial Bas				%	
				%	
				%	
Fract. Acre		**Acreage/Sites**			
21.Developed Pave	28	124.27		100 %	0
22.Undev Paved (F				%	
23.Developed Grav				%	
Acres				%	
24.Undev Gravel (				%	
25.Comm Base Pave				%	
26.Comm Base Grav				%	
27.Backlot				%	
28.Rear Land				%	
29.Pavement				%	

Total Acreage 124.27

Influence Codes

1.Unimproved
2.Excess Frtg
3.Topography
4.Size/Shape
5.Access
6.Restriction
7.Open Space
8.View/Environ
9.Fract Share
Acres
30.Utility R O W
31.Tillable
32.Pasture
33.Orchard
34.Softwood F&O
35.Mixed Wood F&O
36.Hardwood F&O
37.Softwood TG
38.Mixed Wood TG
39.Hardwood TG
40.Wasteland
41.Open Space
42.Mobile Home Si
43.Condo Site
44.Lot Improvemen
45.Subdivision Lo
46.Heavy Ind Sit

Inspection Witnessed By:

X Date

No./Date	Description	Date Insp.

Notes:

* Bk 6106 Pg 221 splits out .73 acres creating lot 22-B. There are now 124.27 acres remaining on lot 22-A. 4-8-2021 ED

Washburn

Washburn

Map Lot 008-022A | Account 155 | Location 24 TABOR ROAD | Card 1 Of 1 | 8/23/2023

Building Style **0**		
1.Conv.	5.Garrison	9.Gambrel
2.Ranch	6.Salt Box	10.Other
3.R Ranch	7.Contemp	11.Split
4.Cape	8.Log	12.
Dwelling Units **0**		
Other Units **0**		
Stories **0**		
1.1	4.1.5	7.
2.2	5.1.75	8.
3.3	6.2.5	9.
Exterior Walls **0**		
1.Wood	5.Stucco	9.T-111
2.Vin/Al	6.Brick	10.Other
3.Compos.	7.Stone	11.
4.Asbestos	8.Concrete	12.
Roof Surface **0**		
1.Asphalt	4.Composit	7.
2.Slate	5.Wood	8.
3.Metal	6.Other	9.
SF Masonry Trim **0**		
OPEN-3-CUSTOM **0**		
OPEN-4-CUSTOM **0**		
Year Built **0**		
Year Remodeled **0**		
Foundation **0**		
1.Concrete	4.Wood	7.
2.C Block	5.Slab	8.
3.Br/Stone	6.Piers	9.
Basement **0**		
1.1/4 Bmt	4.Full Bmt	7.
2.1/2 Bmt	5.None	8.
3.3/4 Bmt	6.	9.None
Bsmt Gar # Cars **0**		
Wet Basement **0**		
1.Dry	4.	7.
2.Damp	5.	8.
3.Wet	6.	9.

SF Bsmt Living **0**		
Fin Bsmt Grade **0 0**		
OPEN 5 OPTIONAL **0**		
Heat Type **100%** **0**		
1.HWBB	5.FWA	9.No Heat
2.HWCI	6.GravWA	10.
3.H Pump	7.Electric	11.
4.Steam	8.Fl/Wall	12.
Cool Type **0%** **9 None**		
1.Refrig	4.W&C Air	7.
2.Evapor	5.	8.
3.H Pump	6.	9.None
Kitchen Style **0**		
1.Modern	4.Obsolete	7.
2.Typical	5.	8.
3.Old Type	6.	9.None
Bath(s) Style **0**		
1.Modern	4.Obsolete	7.
2.Typical	5.	8.
3.Old Type	6.	9.None
# Rooms **0**		
# Bedrooms **0**		
# Full Baths **0**		
# Half Baths **0**		
# Addn Fixtures **0**		
# Fireplaces **0**		

TRIO Software
A Division of Harris Computer Systems

Layout **0**		
1.Typical	4.	7.
2.Inadeq	5.	8.
3.Poor	6.	9.
Attic **0**		
1.1/4 Fin	4.Full Fin	7.
2.1/2 Fin	5.Fl/Stair	8.
3.3/4 Fin	6.	9.None
Insulation **0**		
1.Full	4.Minimal	7.
2.Heavy	5.Partial	8.
3.Capped	6.	9.None
Unfinished % **0%**		
Grade & Factor **0 0%**		
1.E Grade	4.B Grade	7.
2.D Grade	5.A Grade	8.SC Grade
3.C Grade	6.AA Grade	9.Same
SQFT (Footprint) **0**		
Condition **0**		
1.Poor	4.Avg	7.V G
2.Fair	5.Avg+	8.Exc
3.Avg-	6.Good	9.Same
Phys. % Good **0%**		
Funct. % Good **100%**		
Functional Code **9 None**		
1.Incomp	4.Delap	7.No Power
2.O-Built	5.Bsmt	8.LongTerm
3.Damage	6.Common	9.None
Econ. % Good **100%**		
Economic Code **None**		
0.None	3.No Power	7.
1.Location	4.Generate	8.
2.Encroach	9.None	9.
Entrance Code **0**		
1.Interior	4.Vacant	7.
2.Refusal	5.Estimate	8.
3.Informed	6.Reviewed	9.
Information Code **0**		
1.Owner	4.Agent	7.
2.Relative	5.Estimate	8.
3.Tenant	6.Other	9.

Date Inspected

Additions, Outbuildings & Improvements

Type	Year	Units	Grade	Cond	Phys.	Funct.	Sound Value
					%	%	
					%	%	
					%	%	
					%	%	
					%	%	
					%	%	
					%	%	
					%	%	
					%	%	
					%	%	

1.One Story Fram
2.Two Story Fram
3.Three Story Fr
4.1 & 1/2 Story
5.1 & 3/4 Story
6.2 & 1/2 Story
21.Open Frame Por
22.Encl Frame Por
23.Frame Garage
24.Frame Shed
25.Frame Bay Wind
26.1SFr Overhang
27.Unfin Basement
28.Unfinished Att
29.Finished Attic

Map Lot 008-022B | Account 1143 | Location 267 TABOR ROAD | Card 1 Of 1 | 8/23/2023

ANDERSON, DEANNA
CYR, CARTER P
267 TABOR ROAD
WASHBURN ME 04786

B6106P221

Property Data

Neighborhood **1 Neighborhood One**

Tree Growth Year **0**

1ST MORTGAGE

2ND MORTGAGE

Zone/Land Use **1 Residential**

Secondary Zone

Topography **1 Level**

1.Level	4.Below St	7.LevelBog
2.Rolling	5.Low	8.
3.Above St	6.Swampy	9.

Utilities

1.Public	4.Dr Well	7.Cesspool
2.Water	5.Dug Well	8.
3.Sewer	6.Septic	9.None

Street

1.Paved	4.Proposed	7.
2.Semi Imp	5.R/O/W	8.
3.Gravel	6.	9.None

TG PLAN YEAR **0**

Tif District # **0**

Sale Data

Sale Date **12/01/2020**

Price **1,200**

Sale Type **1 Land Only**

1.Land	4.Mobile	7.C/I L&B
2.L & B	5.Other	8.
3.Building	6.C/I Land	9.

Financing **9 Unknown**

1.Convent	4.Seller	7.
2.FHA/VA	5.Private	8.
3.Assumed	6.Cash	9.Unknown

Validity **4 Split/Assemblage**

1.Valid	4.Split	7.Renovate
2.Related	5.Partial	8.Other
3.Distress	6.Exempt	9.

Verified **5 Public Record**

1.Buyer	4.Agent	7.Family
2.Seller	5.Pub Rec	8.Other
3.Lender	6.MLS	9.

Assessment Record

Year	Land	Buildings	Exempt	Total
2021	400	0	0	400
2022	400	0	0	400
2023	400	0	0	400

Land Data

Front Foot	Type	Effective Frontage	Effective Depth	Influence Factor	Influence Code
11.Regular Lot				%	
12.Delta Triangle				%	
13.Nabla Triangle				%	
14.Rear Land				%	
15.Class I Road				%	
				%	
				%	
Square Foot		**Square Feet**			
16.Class II Road				%	
17.Municipal Rese				%	
18.Munic Sep Lago				%	
19.Gravel Pit				%	
20.Industrial Bas				%	
				%	
				%	
Fract. Acre		**Acreage/Sites**			
21.Developed Pave	28	0.73		100 %	0
22.Undev Paved (F				%	
23.Developed Grav				%	
Acres				%	
24.Undev Gravel (				%	
25.Comm Base Pave				%	
26.Comm Base Grav				%	
27.Backlot				%	
28.Rear Land				%	
29.Pavement				%	

Total Acreage 0.73

Influence Codes

1.Unimproved
2.Excess Frtg
3.Topography
4.Size/Shape
5.Access
6.Restriction
7.Open Space
8.View/Environ
9.Fract Share
Acres
30.Utility R O W
31.Tillable
32.Pasture
33.Orchard
34.Softwood F&O
35.Mixed Wood F&O
36.Hardwood F&O
37.Softwood TG
38.Mixed Wood TG
39.Hardwood TG
40.Wasteland
41.Open Space
42.Mobile Home Si
43.Condo Site
44.Lot Improvemen
45.Subdivision Lo
46.Heavy Ind Sit

Inspection Witnessed By:

X Date

No./Date	Description	Date Insp.

Notes:

Washburn

Washburn

Map Lot 008-022B | Account 1143 | Location 267 TABOR ROAD | Card 1 Of 1 | 8/23/2023

Building Style		
1.Conv.	5.Garrison	9.Gambrel
2.Ranch	6.Salt Box	10.Other
3.R Ranch	7.Contemp	11.Split
4.Cape	8.Log	12.

Dwelling Units

Other Units

Stories		
1.1	4.1.5	7.
2.2	5.1.75	8.
3.3	6.2.5	9.

Exterior Walls		
1.Wood	5.Stucco	9.T-111
2.Vin/Al	6.Brick	10.Other
3.Compos.	7.Stone	11.
4.Asbestos	8.Concrete	12.

Roof Surface		
1.Asphalt	4.Composit	7.
2.Slate	5.Wood	8.
3.Metal	6.Other	9.

SF Masonry Trim

OPEN-3-CUSTOM

OPEN-4-CUSTOM

Year Built

Year Remodeled

Foundation		
1.Concrete	4.Wood	7.
2.C Block	5.Slab	8.
3.Br/Stone	6.Piers	9.

Basement		
1.1/4 Bmt	4.Full Bmt	7.
2.1/2 Bmt	5.None	8.
3.3/4 Bmt	6.	9.None

Bsmt Gar # Cars

Wet Basement		
1.Dry	4.	7.
2.Damp	5.	8.
3.Wet	6.	9.

SF Bsmt Living

Fin Bsmt Grade

OPEN 5 OPTIONAL

Heat Type **100%**		
1.HWBB	5.FWA	9.No Heat
2.HWCI	6.GravWA	10.
3.H Pump	7.Electric	11.
4.Steam	8.Fl/Wall	12.

Cool Type **0%**		
1.Refrig	4.W&C Air	7.
2.Evapor	5.	8.
3.H Pump	6.	9.None

Kitchen Style		
1.Modern	4.Obsolete	7.
2.Typical	5.	8.
3.Old Type	6.	9.None

Bath(s) Style		
1.Modern	4.Obsolete	7.
2.Typical	5.	8.
3.Old Type	6.	9.None

Rooms

Bedrooms

Full Baths

Half Baths

Addn Fixtures

Fireplaces

TRIO Software
A Division of Harris Computer Systems

Layout		
1.Typical	4.	7.
2.Inadeq	5.	8.
3.Poor	6.	9.

Attic		
1.1/4 Fin	4.Full Fin	7.
2.1/2 Fin	5.Fl/Stair	8.
3.3/4 Fin	6.	9.None

Insulation		
1.Full	4.Minimal	7.
2.Heavy	5.Partial	8.
3.Capped	6.	9.None

Unfinished %

Grade & Factor		
1.E Grade	4.B Grade	7.
2.D Grade	5.A Grade	8.SC Grade
3.C Grade	6.AA Grade	9.Same

SQFT (Footprint)

Condition		
1.Poor	4.Avg	7.V G
2.Fair	5.Avg+	8.Exc
3.Avg-	6.Good	9.Same

Phys. % Good

Funct. % Good

Functional Code		
1.Incomp	4.Delap	7.No Power
2.O-Built	5.Bsmt	8.LongTerm
3.Damage	6.Common	9.None

Econ. % Good

Economic Code		
0.None	3.No Power	7.
1.Location	4.Generate	8.
2.Encroach	9.None	9.

Entrance Code **0**		
1.Interior	4.Vacant	7.
2.Refusal	5.Estimate	8.
3.Informed	6.Reviewed	9.

Information Code **0**		
1.Owner	4.Agent	7.
2.Relative	5.Estimate	8.
3.Tenant	6.Other	9.

Date Inspected

Additions, Outbuildings & Improvements

Type	Year	Units	Grade	Cond	Phys.	Funct.	Sound Value
					%	%	
					%	%	
					%	%	
					%	%	
					%	%	
					%	%	
					%	%	
					%	%	
					%	%	
					%	%	

1.One Story Fram
2.Two Story Fram
3.Three Story Fr
4.1 & 1/2 Story
5.1 & 3/4 Story
6.2 & 1/2 Story
21.Open Frame Por
22.Encl Frame Por
23.Frame Garage
24.Frame Shed
25.Frame Bay Wind
26.1SFr Overhang
27.Unfin Basement
28.Unfinished Att
29.Finished Attic

Map Lot 008-023 Account 625 Location 107 TABOR ROAD Card 1 Of 1 8/23/2023

Plissey ET AL, Plissey J
Harmon ET AL, Loretta J
107 Tabor Road
Washburn ME 04786

B972P198 B6369P221

Previous Owner
PLISSEY, PAULA J
107 TABOR RD

WASHBURN ME 04786
Sale Date: 9/09/2022

Inspection Witnessed By:

X Date

No./Date	Description	Date Insp.

Notes:

Washburn

Property Data

Neighborhood **1 Neighborhood One**

Tree Growth Year **0**

1ST MORTGAGE **0**

2ND MORTGAGE **0**

Zone/Land Use **1 Residential**

Secondary Zone

Topography **2 Rolling**

1.Level	4.Below St	7.LevelBog
2.Rolling	5.Low	8.
3.Above St	6.Swampy	9.

Utilities **4 Drilled Well** **6 Septic System**

1.Public	4.Dr Well	7.Cesspool
2.Water	5.Dug Well	8.
3.Sewer	6.Septic	9.None

Street **1 Paved**

1.Paved	4.Proposed	7.
2.Semi Imp	5.R/O/W	8.
3.Gravel	6.	9.None

TG PLAN YEAR **0**

Tif District # **0**

Sale Data

Sale Date **9/09/2022**

Price

Sale Type **2 Land & Buildings**

1.Land	4.Mobile	7.C/I L&B
2.L & B	5.Other	8.
3.Building	6.C/I Land	9.

Financing **1 Conventional**

1.Convent	4.Seller	7.
2.FHA/VA	5.Private	8.
3.Assumed	6.Cash	9.Unknown

Validity **2 Related Parties**

1.Valid	4.Split	7.Renovate
2.Related	5.Partial	8.Other
3.Distress	6.Exempt	9.

Verified **5 Public Record**

1.Buyer	4.Agent	7.Family
2.Seller	5.Pub Rec	8.Other
3.Lender	6.MLS	9.

Assessment Record

Year	Land	Buildings	Exempt	Total
2012	9,000	62,300	8,800	62,500
2013	11,700	62,300	8,800	65,200
2015	11,700	62,300	9,000	65,000
2018	11,700	62,300	18,400	55,600
2019	19,000	70,000	20,000	69,000
2020	19,000	70,000	25,000	64,000
2021	19,000	70,000	25,000	64,000
2022	19,000	73,500	25,000	67,500
2023	24,900	87,500	25,000	87,400

Land Data

Front Foot	Type	Effective Frontage	Effective Depth	Influence Factor	Influence Code
11.Regular Lot				%	
12.Delta Triangle				%	
13.Nabla Triangle				%	
14.Rear Land				%	
15.Class I Road				%	
				%	
				%	
Square Foot		**Square Feet**			
16.Class II Road				%	
17.Municipal Rese				%	
18.Munic Sep Lago				%	
19.Gravel Pit				%	
20.Industrial Bas				%	
				%	
				%	
Fract. Acre		**Acreage/Sites**			
21.Developed Pave	21	1.00	100	%	0
22.Undev Paved (F	28	5.00	100	%	0
23.Developed Grav				%	
Acres				%	
24.Undev Gravel (				%	
25.Comm Base Pave				%	
26.Comm Base Grav				%	
27.Backlot				%	
28.Rear Land				%	
29.Pavement				%	

Total Acreage 6.00

Influence Codes

1.Unimproved
2.Excess Frtg
3.Topography
4.Size/Shape
5.Access
6.Restriction
7.Open Space
8.View/Environ
9.Fract Share
Acres
30.Utility R O W
31.Tillable
32.Pasture
33.Orchard
34.Softwood F&O
35.Mixed Wood F&O
36.Hardwood F&O
37.Softwood TG
38.Mixed Wood TG
39.Hardwood TG
40.Wasteland
41.Open Space
42.Mobile Home Si
43.Condo Site
44.Lot Improvemen
45.Subdivision Lo
46.Heavy Ind Sit

Washburn

Map Lot 008-023 | Account 625 | Location 107 TABOR ROAD | Card 1 Of 1 | 8/23/2023

Building Style	**4 Cape Cod**		
1.Conv.	5.Garrison	9.Gambrel	
2.Ranch	6.Salt Box	10.Other	
3.R Ranch	7.Contemp	11.Split	
4.Cape	8.Log	12.	
Dwelling Units	**1**		
Other Units	**0**		
Stories	**5 One & 3/4 Story**		
1.1	4.1.5	7.	
2.2	5.1.75	8.	
3.3	6.2.5	9.	
Exterior Walls	**2 Vinyl/Aluminum**		
1.Wood	5.Stucco	9.T-111	
2.Vin/Al	6.Brick	10.Other	
3.Compos.	7.Stone	11.	
4.Asbestos	8.Concrete	12.	
Roof Surface	**1 Asphalt Shingles**		
1.Asphalt	4.Composit	7.	
2.Slate	5.Wood	8.	
3.Metal	6.Other	9.	
SF Masonry Trim	**0**		
OPEN-3-CUSTOM	**0**		
OPEN-4-CUSTOM	**0**		
Year Built	**1961**		
Year Remodeled	**0**		
Foundation	**1 Concrete**		
1.Concrete	4.Wood	7.	
2.C Block	5.Slab	8.	
3.Br/Stone	6.Piers	9.	
Basement	**4 Full Basement**		
1.1/4 Bmt	4.Full Bmt	7.	
2.1/2 Bmt	5.None	8.	
3.3/4 Bmt	6.	9.None	
Bsmt Gar # Cars	**0**		
Wet Basement	**1 Dry Basement**		
1.Dry	4.	7.	
2.Damp	5.	8.	
3.Wet	6.	9.	

SF Bsmt Living	**0**		
Fin Bsmt Grade	**0 0**		
OPEN 5 OPTIONAL	**0**		
Heat Type	**100%**	**1 Hot Water BB**	
1.HWBB	5.FWA	9.No Heat	
2.HWCI	6.GravWA	10.	
3.H Pump	7.Electric	11.	
4.Steam	8.Fl/Wall	12.	
Cool Type	**0%**	**9 None**	
1.Refrig	4.W&C Air	7.	
2.Evapor	5.	8.	
3.H Pump	6.	9.None	
Kitchen Style	**2 Typical**		
1.Modern	4.Obsolete	7.	
2.Typical	5.	8.	
3.Old Type	6.	9.None	
Bath(s) Style	**2 Typical Bath(s)**		
1.Modern	4.Obsolete	7.	
2.Typical	5.	8.	
3.Old Type	6.	9.None	
# Rooms	**7**		
# Bedrooms	**4**		
# Full Baths	**1**		
# Half Baths	**0**		
# Addn Fixtures	**0**		
# Fireplaces	**0**		

TRIO Software
A Division of Harris Computer Systems

Layout	**1 Typical**		
1.Typical	4.	7.	
2.Inadeq	5.	8.	
3.Poor	6.	9.	
Attic	**9 None**		
1.1/4 Fin	4.Full Fin	7.	
2.1/2 Fin	5.Fl/Stair	8.	
3.3/4 Fin	6.	9.None	
Insulation	**1 Full**		
1.Full	4.Minimal	7.	
2.Heavy	5.Partial	8.	
3.Capped	6.	9.None	
Unfinished %	**0%**		
Grade & Factor	**2 Fair 110%**		
1.E Grade	4.B Grade	7.	
2.D Grade	5.A Grade	8.SC Grade	
3.C Grade	6.AA Grade	9.Same	
SQFT (Footprint)	**936**		
Condition	**5 Above Average**		
1.Poor	4.Avg	7.V G	
2.Fair	5.Avg+	8.Exc	
3.Avg-	6.Good	9.Same	
Phys. % Good	**0%**		
Funct. % Good	**100%**		
Functional Code	**9 None**		
1.Incomp	4.Delap	7.No Power	
2.O-Built	5.Bsmt	8.LongTerm	
3.Damage	6.Common	9.None	
Econ. % Good	**100%**		
Economic Code	**None**		
0.None	3.No Power	7.	
1.Location	4.Generate	8.	
2.Encroach	9.None	9.	
Entrance Code	**3 Information Only**		
1.Interior	4.Vacant	7.	
2.Refusal	5.Estimate	8.	
3.Informed	6.Reviewed	9.	
Information Code	**1 Owner**		
1.Owner	4.Agent	7.	
2.Relative	5.Estimate	8.	
3.Tenant	6.Other	9.	

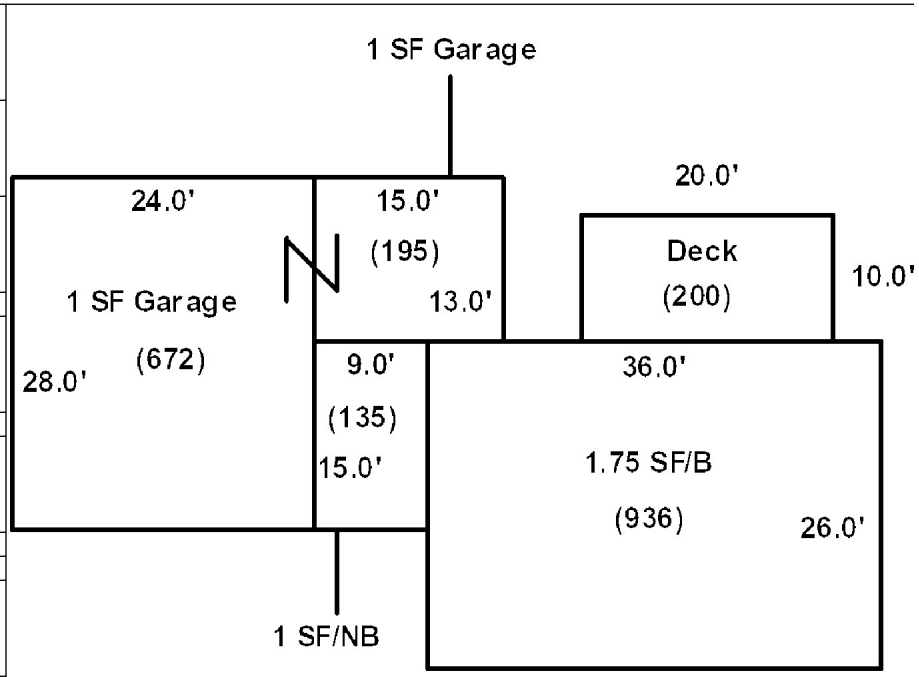

Date Inspected 10/19/2018

Additions, Outbuildings & Improvements

Type	Year	Units	Grade	Cond	Phys.	Funct.	Sound Value
68 Wood Deck	1990	200	2 100	4	0 %	100 %	
1 One Story Frame	1961	135	3 95	5	0 %	100 %	
23 Frame Garage	1965	672	3 95	4	0 %	80 %	
23 Frame Garage	1970	195	2 115	4	0 %	80 %	
					%	%	
					%	%	
					%	%	
					%	%	
					%	%	
					%	%	

1.One Story Fram
2.Two Story Fram
3.Three Story Fr
4.1 & 1/2 Story
5.1 & 3/4 Story
6.2 & 1/2 Story
21.Open Frame Por
22.Encl Frame Por
23.Frame Garage
24.Frame Shed
25.Frame Bay Wind
26.1SFr Overhang
27.Unfin Basement
28.Unfinished Att
29.Finished Attic

Map Lot 008-023A | Account 511 | Location TABOR ROAD | Card 1 Of 1 | 8/23/2023

McCRUM LAND, LLC
P.O. BOX 660
MARS HILL ME 04758

B5197P40

Previous Owner
Howard, Gertrude J.
Howard, Gary G. & George P.
1750 Washburn Road
Washburn ME 04786
Sale Date: 6/20/2013

Inspection Witnessed By:

X Date

No./Date	Description	Date Insp.

Notes:

Washburn

Property Data

Neighborhood	**1 Neighborhood One**
Tree Growth Year	**0**
1ST MORTGAGE	**0**
2ND MORTGAGE	**0**
Zone/Land Use	**2 Commercial**
Secondary Zone	
Topography	**2 Rolling**

1.Level	4.Below St	7.LevelBog
2.Rolling	5.Low	8.
3.Above St	6.Swampy	9.

Utilities

1.Public	4.Dr Well	7.Cesspool
2.Water	5.Dug Well	8.
3.Sewer	6.Septic	9.None

Street **1 Paved**

1.Paved	4.Proposed	7.
2.Semi Imp	5.R/O/W	8.
3.Gravel	6.	9.None

TG PLAN YEAR	**0**
Tif District #	**0**

Sale Data

Sale Date	**6/20/2013**
Price	
Sale Type	**1 Land Only**

1.Land	4.Mobile	7.C/I L&B
2.L & B	5.Other	8.
3.Building	6.C/I Land	9.

Financing **4 Seller Financed**

1.Convent	4.Seller	7.
2.FHA/VA	5.Private	8.
3.Assumed	6.Cash	9.Unknown

Validity **1 Arms Length Sale**

1.Valid	4.Split	7.Renovate
2.Related	5.Partial	8.Other
3.Distress	6.Exempt	9.

Verified **5 Public Record**

1.Buyer	4.Agent	7.Family
2.Seller	5.Pub Rec	8.Other
3.Lender	6.MLS	9.

Assessment Record

Year	Land	Buildings	Exempt	Total
2012	9,200	0	0	9,200
2013	12,700	0	0	12,700
2015	12,700	0	0	12,700
2018	12,700	0	0	12,700
2019	29,500	0	0	29,500
2020	29,500	0	0	29,500
2021	29,500	0	0	29,500
2022	29,500	0	0	29,500
2023	30,200	0	0	30,200

Land Data

Front Foot	Type	Effective Frontage	Effective Depth	Influence Factor	Influence Code
11.Regular Lot				%	
12.Delta Triangle				%	
13.Nabla Triangle				%	
14.Rear Land				%	
15.Class I Road				%	
				%	
				%	
Square Foot		**Square Feet**			
16.Class II Road				%	
17.Municipal Rese				%	
18.Munic Sep Lago				%	
19.Gravel Pit				%	
20.Industrial Bas				%	
				%	
				%	
Fract. Acre		**Acreage/Sites**			
21.Developed Pave	28	9.00	100	%	0
22.Undev Paved (F	31	25.00	100	%	0
23.Developed Grav				%	
Acres				%	
24.Undev Gravel (				%	
25.Comm Base Pave				%	
26.Comm Base Grav				%	
27.Backlot				%	
28.Rear Land				%	
29.Pavement				%	

Total Acreage 34.00

Influence Codes

1.Unimproved
2.Excess Frtg
3.Topography
4.Size/Shape
5.Access
6.Restriction
7.Open Space
8.View/Environ
9.Fract Share
Acres
30.Utility R O W
31.Tillable
32.Pasture
33.Orchard
34.Softwood F&O
35.Mixed Wood F&O
36.Hardwood F&O
37.Softwood TG
38.Mixed Wood TG
39.Hardwood TG
40.Wasteland
41.Open Space
42.Mobile Home Si
43.Condo Site
44.Lot Improvemen
45.Subdivision Lo
46.Heavy Ind Sit

Washburn

Map Lot 008-023A | Account 511 | Location TABOR ROAD | Card 1 Of 1 | 8/23/2023

Building Style **0**		
1.Conv.	5.Garrison	9.Gambrel
2.Ranch	6.Salt Box	10.Other
3.R Ranch	7.Contemp	11.Split
4.Cape	8.Log	12.
Dwelling Units **0**		
Other Units **0**		
Stories **0**		
1.1	4.1.5	7.
2.2	5.1.75	8.
3.3	6.2.5	9.
Exterior Walls **0**		
1.Wood	5.Stucco	9.T-111
2.Vin/Al	6.Brick	10.Other
3.Compos.	7.Stone	11.
4.Asbestos	8.Concrete	12.
Roof Surface **0**		
1.Asphalt	4.Composit	7.
2.Slate	5.Wood	8.
3.Metal	6.Other	9.
SF Masonry Trim **0**		
OPEN-3-CUSTOM **0**		
OPEN-4-CUSTOM **0**		
Year Built **0**		
Year Remodeled **0**		
Foundation **0**		
1.Concrete	4.Wood	7.
2.C Block	5.Slab	8.
3.Br/Stone	6.Piers	9.
Basement **0**		
1.1/4 Bmt	4.Full Bmt	7.
2.1/2 Bmt	5.None	8.
3.3/4 Bmt	6.	9.None
Bsmt Gar # Cars **0**		
Wet Basement **0**		
1.Dry	4.	7.
2.Damp	5.	8.
3.Wet	6.	9.

SF Bsmt Living **0**		
Fin Bsmt Grade **0 0**		
OPEN 5 OPTIONAL **0**		
Heat Type **100%** **0**		
1.HWBB	5.FWA	9.No Heat
2.HWCI	6.GravWA	10.
3.H Pump	7.Electric	11.
4.Steam	8.Fl/Wall	12.
Cool Type **0%** **9 None**		
1.Refrig	4.W&C Air	7.
2.Evapor	5.	8.
3.H Pump	6.	9.None
Kitchen Style **0**		
1.Modern	4.Obsolete	7.
2.Typical	5.	8.
3.Old Type	6.	9.None
Bath(s) Style **0**		
1.Modern	4.Obsolete	7.
2.Typical	5.	8.
3.Old Type	6.	9.None
# Rooms **0**		
# Bedrooms **0**		
# Full Baths **0**		
# Half Baths **0**		
# Addn Fixtures **0**		
# Fireplaces **0**		

TRIO Software
A Division of Harris Computer Systems

Layout **0**		
1.Typical	4.	7.
2.Inadeq	5.	8.
3.Poor	6.	9.
Attic **0**		
1.1/4 Fin	4.Full Fin	7.
2.1/2 Fin	5.Fl/Stair	8.
3.3/4 Fin	6.	9.None
Insulation **0**		
1.Full	4.Minimal	7.
2.Heavy	5.Partial	8.
3.Capped	6.	9.None
Unfinished % **0%**		
Grade & Factor **0 0%**		
1.E Grade	4.B Grade	7.
2.D Grade	5.A Grade	8.SC Grade
3.C Grade	6.AA Grade	9.Same
SQFT (Footprint) **0**		
Condition **0**		
1.Poor	4.Avg	7.V G
2.Fair	5.Avg+	8.Exc
3.Avg-	6.Good	9.Same
Phys. % Good **0%**		
Funct. % Good **100%**		
Functional Code **9 None**		
1.Incomp	4.Delap	7.No Power
2.O-Built	5.Bsmt	8.LongTerm
3.Damage	6.Common	9.None
Econ. % Good **100%**		
Economic Code **None**		
0.None	3.No Power	7.
1.Location	4.Generate	8.
2.Encroach	9.None	9.
Entrance Code **0**		
1.Interior	4.Vacant	7.
2.Refusal	5.Estimate	8.
3.Informed	6.Reviewed	9.
Information Code **0**		
1.Owner	4.Agent	7.
2.Relative	5.Estimate	8.
3.Tenant	6.Other	9.

Date Inspected

Additions, Outbuildings & Improvements

Type	Year	Units	Grade	Cond	Phys.	Funct.	Sound Value
					%	%	
					%	%	
					%	%	
					%	%	
					%	%	
					%	%	
					%	%	
					%	%	
					%	%	
					%	%	

1.One Story Fram
2.Two Story Fram
3.Three Story Fr
4.1 & 1/2 Story
5.1 & 3/4 Story
6.2 & 1/2 Story
21.Open Frame Por
22.Encl Frame Por
23.Frame Garage
24.Frame Shed
25.Frame Bay Wind
26.1SFr Overhang
27.Unfin Basement
28.Unfinished Att
29.Finished Attic

Map Lot 008-024 | Account 79 | Location WASHBURN ROAD | Card 1 Of 1 | 8/23/2023

HKS PARTNERSHIP
76 TURNPIKE ROAD
WILLINGTON CT 06279

B4553P61 B4553P63

Previous Owner
Carle, Kenneth F.
11 Debeck Drive

Holden ME 04429
Sale Date: 3/07/2008

Inspection Witnessed By:

X Date

No./Date	Description	Date Insp.

Notes:

Washburn

Property Data

Neighborhood	**1 Neighborhood One**
Tree Growth Year	**0**
1ST MORTGAGE	**0**
2ND MORTGAGE	**0**
Zone/Land Use	**2 Commercial**
Secondary Zone	
Topography	**2 Rolling**

1.Level	4.Below St	7.LevelBog
2.Rolling	5.Low	8.
3.Above St	6.Swampy	9.

Utilities

1.Public	4.Dr Well	7.Cesspool
2.Water	5.Dug Well	8.
3.Sewer	6.Septic	9.None

Street **1 Paved**

1.Paved	4.Proposed	7.
2.Semi Imp	5.R/O/W	8.
3.Gravel	6.	9.None

TG PLAN YEAR	**2028**
Tif District #	**0**

Sale Data

Sale Date	**3/06/2008**
Price	**79,500**

Sale Type **1 Land Only**

1.Land	4.Mobile	7.C/I L&B
2.L & B	5.Other	8.
3.Building	6.C/I Land	9.

Financing **1 Conventional**

1.Convent	4.Seller	7.
2.FHA/VA	5.Private	8.
3.Assumed	6.Cash	9.Unknown

Validity **1 Arms Length Sale**

1.Valid	4.Split	7.Renovate
2.Related	5.Partial	8.Other
3.Distress	6.Exempt	9.

Verified **5 Public Record**

1.Buyer	4.Agent	7.Family
2.Seller	5.Pub Rec	8.Other
3.Lender	6.MLS	9.

Assessment Record

Year	Land	Buildings	Exempt	Total
2012	20,400	0	0	20,400
2013	24,700	0	0	24,700
2015	24,700	0	0	24,700
2018	28,600	0	0	28,600
2019	40,500	0	0	40,500
2020	40,300	0	0	40,300
2021	37,900	0	0	37,900
2022	38,600	0	0	38,600
2023	44,300	0	0	44,300

Land Data

Front Foot	Type	Effective Frontage	Effective Depth	Influence Factor	Influence Code
11.Regular Lot				%	
12.Delta Triangle				%	
13.Nabla Triangle				%	
14.Rear Land				%	
15.Class I Road				%	
				%	
				%	
Square Foot		**Square Feet**			
16.Class II Road				%	
17.Municipal Rese				%	
18.Munic Sep Lago				%	
19.Gravel Pit				%	
20.Industrial Bas				%	
				%	
				%	
Fract. Acre		**Acreage/Sites**			
21.Developed Pave	22	1.00	100	%	0
22.Undev Paved (F	28	27.10	100	%	0
23.Developed Grav	37	8.10	100	%	0
Acres	38	33.50	100	%	0
24.Undev Gravel (	39	67.20	100	%	0
25.Comm Base Pave	40	1.40	100	%	0
26.Comm Base Grav				%	
27.Backlot					
28.Rear Land					
29.Pavement					

Total Acreage 138.30

Influence Codes

1.Unimproved
2.Excess Frtg
3.Topography
4.Size/Shape
5.Access
6.Restriction
7.Open Space
8.View/Environ
9.Fract Share
Acres
30.Utility R O W
31.Tillable
32.Pasture
33.Orchard
34.Softwood F&O
35.Mixed Wood F&O
36.Hardwood F&O
37.Softwood TG
38.Mixed Wood TG
39.Hardwood TG
40.Wasteland
41.Open Space
42.Mobile Home Si
43.Condo Site
44.Lot Improvemen
45.Subdivision Lo
46.Heavy Ind Sit

Washburn

Map Lot 008-024 | Account 79 | Location WASHBURN ROAD | Card 1 Of 1 | 8/23/2023

Building Style **0**		
1.Conv.	5.Garrison	9.Gambrel
2.Ranch	6.Salt Box	10.Other
3.R Ranch	7.Contemp	11.Split
4.Cape	8.Log	12.
Dwelling Units **0**		
Other Units **0**		
Stories **0**		
1.1	4.1.5	7.
2.2	5.1.75	8.
3.3	6.2.5	9.
Exterior Walls **0**		
1.Wood	5.Stucco	9.T-111
2.Vin/Al	6.Brick	10.Other
3.Compos.	7.Stone	11.
4.Asbestos	8.Concrete	12.
Roof Surface **0**		
1.Asphalt	4.Composit	7.
2.Slate	5.Wood	8.
3.Metal	6.Other	9.
SF Masonry Trim **0**		
OPEN-3-CUSTOM **0**		
OPEN-4-CUSTOM **0**		
Year Built **0**		
Year Remodeled **0**		
Foundation **0**		
1.Concrete	4.Wood	7.
2.C Block	5.Slab	8.
3.Br/Stone	6.Piers	9.
Basement **0**		
1.1/4 Bmt	4.Full Bmt	7.
2.1/2 Bmt	5.None	8.
3.3/4 Bmt	6.	9.None
Bsmt Gar # Cars **0**		
Wet Basement **0**		
1.Dry	4.	7.
2.Damp	5.	8.
3.Wet	6.	9.

SF Bsmt Living **0**		
Fin Bsmt Grade **0 0**		
OPEN 5 OPTIONAL **0**		
Heat Type **100%** **0**		
1.HWBB	5.FWA	9.No Heat
2.HWCI	6.GravWA	10.
3.H Pump	7.Electric	11.
4.Steam	8.Fl/Wall	12.
Cool Type **0%** **9 None**		
1.Refrig	4.W&C Air	7.
2.Evapor	5.	8.
3.H Pump	6.	9.None
Kitchen Style **0**		
1.Modern	4.Obsolete	7.
2.Typical	5.	8.
3.Old Type	6.	9.None
Bath(s) Style **0**		
1.Modern	4.Obsolete	7.
2.Typical	5.	8.
3.Old Type	6.	9.None
# Rooms **0**		
# Bedrooms **0**		
# Full Baths **0**		
# Half Baths **0**		
# Addn Fixtures **0**		
# Fireplaces **0**		

TRIO Software
A Division of Harris Computer Systems

Layout **0**		
1.Typical	4.	7.
2.Inadeq	5.	8.
3.Poor	6.	9.
Attic **0**		
1.1/4 Fin	4.Full Fin	7.
2.1/2 Fin	5.Fl/Stair	8.
3.3/4 Fin	6.	9.None
Insulation **0**		
1.Full	4.Minimal	7.
2.Heavy	5.Partial	8.
3.Capped	6.	9.None
Unfinished % **0%**		
Grade & Factor **0 0%**		
1.E Grade	4.B Grade	7.
2.D Grade	5.A Grade	8.SC Grade
3.C Grade	6.AA Grade	9.Same
SQFT (Footprint) **0**		
Condition **0**		
1.Poor	4.Avg	7.V G
2.Fair	5.Avg+	8.Exc
3.Avg-	6.Good	9.Same
Phys. % Good **0%**		
Funct. % Good **100%**		
Functional Code **9 None**		
1.Incomp	4.Delap	7.No Power
2.O-Built	5.Bsmt	8.LongTerm
3.Damage	6.Common	9.None
Econ. % Good **100%**		
Economic Code **None**		
0.None	3.No Power	7.
1.Location	4.Generate	8.
2.Encroach	9.None	9.
Entrance Code **0**		
1.Interior	4.Vacant	7.
2.Refusal	5.Estimate	8.
3.Informed	6.Reviewed	9.
Information Code **0**		
1.Owner	4.Agent	7.
2.Relative	5.Estimate	8.
3.Tenant	6.Other	9.

Date Inspected

Additions, Outbuildings & Improvements

Type	Year	Units	Grade	Cond	Phys.	Funct.	Sound Value
					%	%	
					%	%	
					%	%	
					%	%	
					%	%	
					%	%	
					%	%	
					%	%	
					%	%	
					%	%	

1.One Story Fram
2.Two Story Fram
3.Three Story Fr
4.1 & 1/2 Story
5.1 & 3/4 Story
6.2 & 1/2 Story
21.Open Frame Por
22.Encl Frame Por
23.Frame Garage
24.Frame Shed
25.Frame Bay Wind
26.1SFr Overhang
27.Unfin Basement
28.Unfinished Att
29.Finished Attic

Map Lot 008-024A | Account 25 | Location 1976 WASHBURN ROAD | Card 1 Of 1 | 8/23/2023

BOURGOINE, RODNEY E
BOURGOINE, LINDA E
1976 WASHBURN ROAD
WASHBURN ME 04786

B1751P306 B2995P231 B3982P88 B5301P73

Property Data

Neighborhood **1 Neighborhood One**

Tree Growth Year **0**

1ST MORTGAGE **0**

2ND MORTGAGE **0**

Zone/Land Use **1 Residential**

Secondary Zone

Topography **2 Rolling**

1.Level	4.Below St	7.LevelBog
2.Rolling	5.Low	8.
3.Above St	6.Swampy	9.

Utilities **4 Drilled Well** **6 Septic System**

1.Public	4.Dr Well	7.Cesspool
2.Water	5.Dug Well	8.
3.Sewer	6.Septic	9.None

Street **1 Paved**

1.Paved	4.Proposed	7.
2.Semi Imp	5.R/O/W	8.
3.Gravel	6.	9.None

TG PLAN YEAR **0**

Tif District # **0**

Sale Data

Sale Date **6/26/1984**

Price

Sale Type **2 Land & Buildings**

1.Land	4.Mobile	7.C/I L&B
2.L & B	5.Other	8.
3.Building	6.C/I Land	9.

Financing **1 Conventional**

1.Convent	4.Seller	7.
2.FHA/VA	5.Private	8.
3.Assumed	6.Cash	9.Unknown

Validity **1 Arms Length Sale**

1.Valid	4.Split	7.Renovate
2.Related	5.Partial	8.Other
3.Distress	6.Exempt	9.

Verified **5 Public Record**

1.Buyer	4.Agent	7.Family
2.Seller	5.Pub Rec	8.Other
3.Lender	6.MLS	9.

Assessment Record

Year	Land	Buildings	Exempt	Total
2012	9,700	56,100	8,800	57,000
2013	12,500	61,600	8,800	65,300
2015	12,500	61,600	9,000	65,100
2018	12,500	61,600	18,400	55,700
2019	21,000	43,800	20,000	44,800
2020	21,000	42,500	25,000	38,500
2021	21,000	43,800	25,000	39,800
2022	21,000	45,900	25,000	41,900
2023	27,200	54,400	25,000	56,600

Land Data

Front Foot	Type	Effective Frontage	Effective Depth	Influence Factor	Influence Code
11.Regular Lot				%	
12.Delta Triangle				%	
13.Nabla Triangle				%	
14.Rear Land				%	
15.Class I Road				%	
				%	
				%	
Square Foot		**Square Feet**			
16.Class II Road				%	
17.Municipal Rese				%	
18.Munic Sep Lago				%	
19.Gravel Pit				%	
20.Industrial Bas				%	
				%	
				%	
Fract. Acre		**Acreage/Sites**			
21.Developed Pave	21	1.00	100	%	0
22.Undev Paved (F	28	9.00	100	%	0
23.Developed Grav				%	
Acres				%	
24.Undev Gravel (				%	
25.Comm Base Pave				%	
26.Comm Base Grav				%	
27.Backlot				%	
28.Rear Land				%	
29.Pavement				%	

Total Acreage 10.00

Influence Codes

1.Unimproved
2.Excess Frtg
3.Topography
4.Size/Shape
5.Access
6.Restriction
7.Open Space
8.View/Environ
9.Fract Share
Acres
30.Utility R O W
31.Tillable
32.Pasture
33.Orchard
34.Softwood F&O
35.Mixed Wood F&O
36.Hardwood F&O
37.Softwood TG
38.Mixed Wood TG
39.Hardwood TG
40.Wasteland
41.Open Space
42.Mobile Home Si
43.Condo Site
44.Lot Improvemen
45.Subdivision Lo
46.Heavy Ind Sit

Inspection Witnessed By:

X Date

No./Date	Description	Date Insp.

Notes:

*2-19-2019 MH HUD # NTA 1318673. -20% for attached garage.

Washburn

Washburn

Map Lot 008-024A | Account 25 | Location 1976 WASHBURN ROAD | Card 1 Of 1 | 8/23/2023

Building Style **0**		
1.Conv.	5.Garrison	9.Gambrel
2.Ranch	6.Salt Box	10.Other
3.R Ranch	7.Contemp	11.Split
4.Cape	8.Log	12.
Dwelling Units **0**		
Other Units **0**		
Stories **0**		
1.1	4.1.5	7.
2.2	5.1.75	8.
3.3	6.2.5	9.
Exterior Walls **0**		
1.Wood	5.Stucco	9.T-111
2.Vin/Al	6.Brick	10.Other
3.Compos.	7.Stone	11.
4.Asbestos	8.Concrete	12.
Roof Surface **0**		
1.Asphalt	4.Composit	7.
2.Slate	5.Wood	8.
3.Metal	6.Other	9.
SF Masonry Trim **0**		
OPEN-3-CUSTOM **0**		
OPEN-4-CUSTOM **0**		
Year Built **0**		
Year Remodeled **0**		
Foundation **0**		
1.Concrete	4.Wood	7.
2.C Block	5.Slab	8.
3.Br/Stone	6.Piers	9.
Basement **0**		
1.1/4 Bmt	4.Full Bmt	7.
2.1/2 Bmt	5.None	8.
3.3/4 Bmt	6.	9.None
Bsmt Gar # Cars **0**		
Wet Basement **0**		
1.Dry	4.	7.
2.Damp	5.	8.
3.Wet	6.	9.

SF Bsmt Living **0**		
Fin Bsmt Grade **0 0**		
OPEN 5 OPTIONAL **0**		
Heat Type **100%** **0**		
1.HWBB	5.FWA	9.No Heat
2.HWCI	6.GravWA	10.
3.H Pump	7.Electric	11.
4.Steam	8.Fl/Wall	12.
Cool Type **0%** **9 None**		
1.Refrig	4.W&C Air	7.
2.Evapor	5.	8.
3.H Pump	6.	9.None
Kitchen Style **0**		
1.Modern	4.Obsolete	7.
2.Typical	5.	8.
3.Old Type	6.	9.None
Bath(s) Style **0**		
1.Modern	4.Obsolete	7.
2.Typical	5.	8.
3.Old Type	6.	9.None
# Rooms **0**		
# Bedrooms **0**		
# Full Baths **0**		
# Half Baths **0**		
# Addn Fixtures **0**		
# Fireplaces **0**		

TRIO Software
A Division of Harris Computer Systems

Layout **0**		
1.Typical	4.	7.
2.Inadeq	5.	8.
3.Poor	6.	9.
Attic **0**		
1.1/4 Fin	4.Full Fin	7.
2.1/2 Fin	5.Fl/Stair	8.
3.3/4 Fin	6.	9.None
Insulation **0**		
1.Full	4.Minimal	7.
2.Heavy	5.Partial	8.
3.Capped	6.	9.None
Unfinished % **0%**		
Grade & Factor **0 0%**		
1.E Grade	4.B Grade	7.
2.D Grade	5.A Grade	8.SC Grade
3.C Grade	6.AA Grade	9.Same
SQFT (Footprint) **0**		
Condition **0**		
1.Poor	4.Avg	7.V G
2.Fair	5.Avg+	8.Exc
3.Avg-	6.Good	9.Same
Phys. % Good **0%**		
Funct. % Good **100%**		
Functional Code **9 None**		
1.Incomp	4.Delap	7.No Power
2.O-Built	5.Bsmt	8.LongTerm
3.Damage	6.Common	9.None
Econ. % Good **100%**		
Economic Code **None**		
0.None	3.No Power	7.
1.Location	4.Generate	8.
2.Encroach	9.None	9.
Entrance Code **5 Estimated**		
1.Interior	4.Vacant	7.
2.Refusal	5.Estimate	8.
3.Informed	6.Reviewed	9.
Information Code **5 Estimate**		
1.Owner	4.Agent	7.
2.Relative	5.Estimate	8.
3.Tenant	6.Other	9.

Date Inspected 10/19/2018

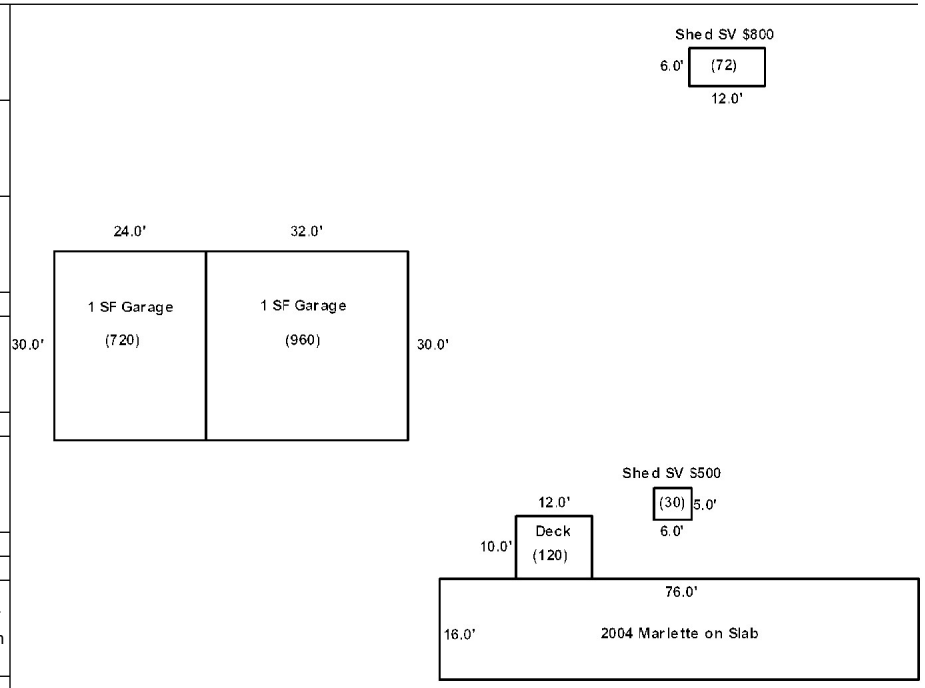

Additions, Outbuildings & Improvements

Type	Year	Units	Grade	Cond	Phys.	Funct.	Sound Value
852 Marlette M/H	2004	16x76	4 100	4	0 %	100 %	
48 Concrete Slab	2004	1216	3 100	4	0 %	100 %	
68 Wood Deck	2004	120	3 100	4	0 %	100 %	
24 Frame Shed	0				%	%	500
24 Frame Shed	0				%	%	800
23 Frame Garage	2005	960	3 100	4	0 %	100 %	
23 Frame Garage	2008	720	3 100	4	0 %	80 %	
					%	%	
					%	%	
					%	%	

1.One Story Fram
2.Two Story Fram
3.Three Story Fr
4.1 & 1/2 Story
5.1 & 3/4 Story
6.2 & 1/2 Story
21.Open Frame Por
22.Encl Frame Por
23.Frame Garage
24.Frame Shed
25.Frame Bay Wind
26.1SFr Overhang
27.Unfin Basement
28.Unfinished Att
29.Finished Attic

Map Lot 008-024B | Account 1071 | Location 1928 WASHBURN ROAD | Card 1 Of 1 | 8/23/2023

THERIAULT, SCOTT J
1928 WASHBURN ROAD
WASHBURN ME 04786

B4702P336

Previous Owner
Parker, Richard
1928 Washburn Road

Washburn ME 04786
Sale Date: 5/22/2009

Previous Owner
Corbin, Christopher
467 River Road

Caribou ME
Sale Date: 8/17/2006

Inspection Witnessed By:

X Date

No./Date	Description	Date Insp.

Notes:

* Dwelling estimated at 100% for 2020.
*2-19-2019 Assessed at 95% complete at time of reval. Check for completion for 2019. -20% for attached garage. 1 SF/NB assessed at 80% finished at time of reval, Check for 2019.

Washburn

Property Data

Neighborhood **1 Neighborhood One**

Tree Growth Year **0**

1ST MORTGAGE **0**

2ND MORTGAGE **0**

Zone/Land Use **1 Residential**

Secondary Zone

Topography **2 Rolling**

1.Level	4.Below St	7.LevelBog
2.Rolling	5.Low	8.
3.Above St	6.Swampy	9.

Utilities **4 Drilled Well** **6 Septic System**

1.Public	4.Dr Well	7.Cesspool
2.Water	5.Dug Well	8.
3.Sewer	6.Septic	9.None

Street **1 Paved**

1.Paved	4.Proposed	7.
2.Semi Imp	5.R/O/W	8.
3.Gravel	6.	9.None

TG PLAN YEAR **0**

Tif District # **0**

Sale Data

Sale Date **5/22/2009**

Price **45,000**

Sale Type **2 Land & Buildings**

1.Land	4.Mobile	7.C/I L&B
2.L & B	5.Other	8.
3.Building	6.C/I Land	9.

Financing

1.Convent	4.Seller	7.
2.FHA/VA	5.Private	8.
3.Assumed	6.Cash	9.Unknown

Validity **1 Arms Length Sale**

1.Valid	4.Split	7.Renovate
2.Related	5.Partial	8.Other
3.Distress	6.Exempt	9.

Verified **5 Public Record**

1.Buyer	4.Agent	7.Family
2.Seller	5.Pub Rec	8.Other
3.Lender	6.MLS	9.

Assessment Record

Year	Land	Buildings	Exempt	Total
2012	6,500	38,800	8,800	36,500
2013	8,500	38,800	8,800	38,500
2015	8,500	38,800	9,000	38,300
2018	8,500	38,800	18,400	28,900
2019	16,500	93,000	20,000	89,500
2020	16,500	94,600	25,000	86,100
2021	16,500	94,800	25,000	86,300
2022	16,500	99,500	25,000	91,000
2023	22,000	118,100	25,000	115,100

Land Data

Front Foot	Type	Effective Frontage	Effective Depth	Influence Factor	Influence Code
11.Regular Lot				%	
12.Delta Triangle				%	
13.Nabla Triangle				%	
14.Rear Land				%	
15.Class I Road				%	
				%	
				%	
Square Foot		**Square Feet**			
16.Class II Road				%	
17.Municipal Rese				%	
18.Munic Sep Lago				%	
19.Gravel Pit				%	
20.Industrial Bas				%	
				%	
				%	
Fract. Acre		**Acreage/Sites**			
21.Developed Pave	21		1.00	100 %	0
22.Undev Paved (F				%	
23.Developed Grav				%	
Acres				%	
24.Undev Gravel (				%	
25.Comm Base Pave				%	
26.Comm Base Grav				%	
27.Backlot				%	
28.Rear Land				%	
29.Pavement				%	

Total Acreage 1.00

Influence Codes

1.Unimproved
2.Excess Frtg
3.Topography
4.Size/Shape
5.Access
6.Restriction
7.Open Space
8.View/Environ
9.Fract Share
Acres
30.Utility R O W
31.Tillable
32.Pasture
33.Orchard
34.Softwood F&O
35.Mixed Wood F&O
36.Hardwood F&O
37.Softwood TG
38.Mixed Wood TG
39.Hardwood TG
40.Wasteland
41.Open Space
42.Mobile Home Si
43.Condo Site
44.Lot Improvemen
45.Subdivision Lo
46.Heavy Ind Sit

Washburn

Map Lot 008-024B | Account 1071 | Location 1928 WASHBURN ROAD | Card 1 Of 1 | 8/23/2023

Building Style	**8 Log Home**		
1.Conv.	5.Garrison	9.Gambrel	
2.Ranch	6.Salt Box	10.Other	
3.R Ranch	7.Contemp	11.Split	
4.Cape	8.Log	12.	
Dwelling Units	**1**		
Other Units	**0**		
Stories	**1 One Story**		
1.1	4.1.5	7.	
2.2	5.1.75	8.	
3.3	6.2.5	9.	
Exterior Walls	**1 Wood Siding**		
1.Wood	5.Stucco	9.T-111	
2.Vin/Al	6.Brick	10.Other	
3.Compos.	7.Stone	11.	
4.Asbestos	8.Concrete	12.	
Roof Surface	**3 Sheet Metal**		
1.Asphalt	4.Composit	7.	
2.Slate	5.Wood	8.	
3.Metal	6.Other	9.	
SF Masonry Trim	**0**		
OPEN-3-CUSTOM	**0**		
OPEN-4-CUSTOM	**0**		
Year Built	**2006**		
Year Remodeled	**0**		
Foundation	**5 Concrete Slab**		
1.Concrete	4.Wood	7.	
2.C Block	5.Slab	8.	
3.Br/Stone	6.Piers	9.	
Basement	**9 No Basement**		
1.1/4 Bmt	4.Full Bmt	7.	
2.1/2 Bmt	5.None	8.	
3.3/4 Bmt	6.	9.None	
Bsmt Gar # Cars	**0**		
Wet Basement	**9 No Basement**		
1.Dry	4.	7.	
2.Damp	5.	8.	
3.Wet	6.	9.	

SF Bsmt Living	**0**		
Fin Bsmt Grade	**0 0**		
OPEN 5 OPTIONAL	**0**		
Heat Type	**100%**	**1 Hot Water BB**	
1.HWBB	5.FWA	9.No Heat	
2.HWCI	6.GravWA	10.	
3.H Pump	7.Electric	11.	
4.Steam	8.Fl/Wall	12.	
Cool Type	**0%**	**9 None**	
1.Refrig	4.W&C Air	7.	
2.Evapor	5.	8.	
3.H Pump	6.	9.None	
Kitchen Style	**2 Typical**		
1.Modern	4.Obsolete	7.	
2.Typical	5.	8.	
3.Old Type	6.	9.None	
Bath(s) Style	**2 Typical Bath(s)**		
1.Modern	4.Obsolete	7.	
2.Typical	5.	8.	
3.Old Type	6.	9.None	
# Rooms	**5**		
# Bedrooms	**1**		
# Full Baths	**1**		
# Half Baths	**0**		
# Addn Fixtures	**0**		
# Fireplaces	**0**		

TRIO Software
A Division of Harris Computer Systems

Layout	**1 Typical**		
1.Typical	4.	7.	
2.Inadeq	5.	8.	
3.Poor	6.	9.	
Attic	**9 None**		
1.1/4 Fin	4.Full Fin	7.	
2.1/2 Fin	5.Fl/Stair	8.	
3.3/4 Fin	6.	9.None	
Insulation	**1 Full**		
1.Full	4.Minimal	7.	
2.Heavy	5.Partial	8.	
3.Capped	6.	9.None	
Unfinished %	**0%**		
Grade & Factor	**3 Average 90%**		
1.E Grade	4.B Grade	7.	
2.D Grade	5.A Grade	8.SC Grade	
3.C Grade	6.AA Grade	9.Same	
SQFT (Footprint)	**832**		
Condition	**4 Average**		
1.Poor	4.Avg	7.V G	
2.Fair	5.Avg+	8.Exc	
3.Avg-	6.Good	9.Same	
Phys. % Good	**0%**		
Funct. % Good	**100%**		
Functional Code	**9 None**		
1.Incomp	4.Delap	7.No Power	
2.O-Built	5.Bsmt	8.LongTerm	
3.Damage	6.Common	9.None	
Econ. % Good	**100%**		
Economic Code	**None**		
0.None	3.No Power	7.	
1.Location	4.Generate	8.	
2.Encroach	9.None	9.	
Entrance Code	**1 Interior Inspect**		
1.Interior	4.Vacant	7.	
2.Refusal	5.Estimate	8.	
3.Informed	6.Reviewed	9.	
Information Code	**1 Owner**		
1.Owner	4.Agent	7.	
2.Relative	5.Estimate	8.	
3.Tenant	6.Other	9.	

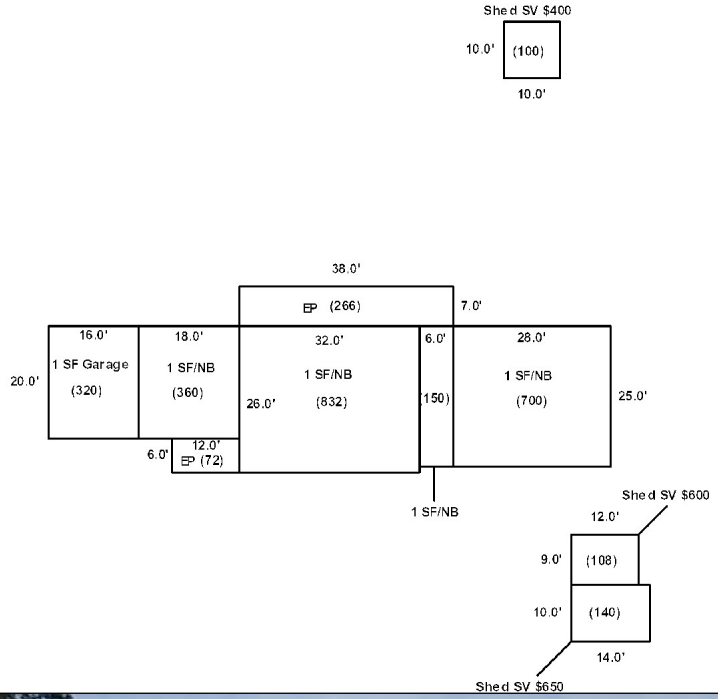

Date Inspected 10/19/2018

Additions, Outbuildings & Improvements

Type	Year	Units	Grade	Cond	Phys.	Funct.	Sound Value
23 Frame Garage	2006	320	3 95	4	0 %	80 %	
1 One Story Frame	2006	360	3 90	4	0 %	100 %	
22 Encl Frame Porch	2006	72	3 90	4	0 %	100 %	
22 Encl Frame Porch	2006	266	3 90	4	0 %	100 %	
1 One Story Frame	2008	150	3 90	4	0 %	100 %	
1 One Story Frame	2008	700	2 105	3	0 %	80 %	
24 Frame Shed	0				%	%	400
24 Frame Shed	0				%	%	600
24 Frame Shed	0				%	%	650
					%	%	

1.One Story Fram
2.Two Story Fram
3.Three Story Fr
4.1 & 1/2 Story
5.1 & 3/4 Story
6.2 & 1/2 Story
21.Open Frame Por
22.Encl Frame Por
23.Frame Garage
24.Frame Shed
25.Frame Bay Wind
26.1SFr Overhang
27.Unfin Basement
28.Unfinished Att
29.Finished Attic

Map Lot 008-025 Account 279 Location 1922 WASHBURN ROAD Card 1 Of 1 8/23/2023

COREY, IVAN F
COREY, MURIEL A
PO BOX 646
WASHBURN ME 04786

B2350P212 B4893P195

Property Data

Neighborhood **1 Neighborhood One**

Tree Growth Year **0**

1ST MORTGAGE **0**

2ND MORTGAGE **0**

Zone/Land Use **1 Residential**

Secondary Zone

Topography **2 Rolling**

1.Level	4.Below St	7.LevelBog
2.Rolling	5.Low	8.
3.Above St	6.Swampy	9.

Utilities **4 Drilled Well** **6 Septic System**

1.Public	4.Dr Well	7.Cesspool
2.Water	5.Dug Well	8.
3.Sewer	6.Septic	9.None

Street **1 Paved**

1.Paved	4.Proposed	7.
2.Semi Imp	5.R/O/W	8.
3.Gravel	6.	9.None

TG PLAN YEAR **0**

Tif District # **0**

Sale Data

Sale Date **4/16/1991**

Price

Sale Type **2 Land & Buildings**

1.Land	4.Mobile	7.C/I L&B
2.L & B	5.Other	8.
3.Building	6.C/I Land	9.

Financing **1 Conventional**

1.Convent	4.Seller	7.
2.FHA/VA	5.Private	8.
3.Assumed	6.Cash	9.Unknown

Validity **1 Arms Length Sale**

1.Valid	4.Split	7.Renovate
2.Related	5.Partial	8.Other
3.Distress	6.Exempt	9.

Verified **5 Public Record**

1.Buyer	4.Agent	7.Family
2.Seller	5.Pub Rec	8.Other
3.Lender	6.MLS	9.

Assessment Record

Year	Land	Buildings	Exempt	Total
2012	2,500	40,200	8,800	33,900
2013	3,200	40,200	8,800	34,600
2015	3,200	40,200	9,000	34,400
2018	3,200	41,200	18,400	26,000
2019	6,200	64,600	20,000	50,800
2020	6,200	64,400	25,000	45,600
2021	6,200	64,600	25,000	45,800
2022	6,200	67,800	25,000	49,000
2023	8,200	80,700	25,000	63,900

Land Data

Front Foot	Type	Effective Frontage	Effective Depth	Influence Factor	Influence Code
11.Regular Lot				%	
12.Delta Triangle				%	
13.Nabla Triangle				%	
14.Rear Land				%	
15.Class I Road				%	
				%	
				%	
Square Foot		**Square Feet**			
16.Class II Road				%	
17.Municipal Rese				%	
18.Munic Sep Lago				%	
19.Gravel Pit				%	
20.Industrial Bas				%	
				%	
				%	
Fract. Acre		**Acreage/Sites**			
21.Developed Pave	21	0.14		100 %	0
22.Undev Paved (F				%	
23.Developed Grav				%	
Acres				%	
24.Undev Gravel (				%	
25.Comm Base Pave				%	
26.Comm Base Grav				%	
27.Backlot				%	
28.Rear Land				%	
29.Pavement				%	

Total Acreage 0.14

Influence Codes

1.Unimproved
2.Excess Frtg
3.Topography
4.Size/Shape
5.Access
6.Restriction
7.Open Space
8.View/Environ
9.Fract Share
Acres
30.Utility R O W
31.Tillable
32.Pasture
33.Orchard
34.Softwood F&O
35.Mixed Wood F&O
36.Hardwood F&O
37.Softwood TG
38.Mixed Wood TG
39.Hardwood TG
40.Wasteland
41.Open Space
42.Mobile Home Si
43.Condo Site
44.Lot Improvemen
45.Subdivision Lo
46.Heavy Ind Sit

Inspection Witnessed By:

X Date

No./Date	Description	Date Insp.

Notes:

*2-19-2019 -10% for attached garage and -20% for attached shed.

Washburn

Washburn

Map Lot 008-025 | Account 279 | Location 1922 WASHBURN ROAD | Card 1 Of 1 | 8/23/2023

Building Style	**4 Cape Cod**		
1.Conv.	5.Garrison	9.Gambrel	
2.Ranch	6.Salt Box	10.Other	
3.R Ranch	7.Contemp	11.Split	
4.Cape	8.Log	12.	
Dwelling Units	**1**		
Other Units	**0**		
Stories	**4 One & 1/2 Story**		
1.1	4.1.5	7.	
2.2	5.1.75	8.	
3.3	6.2.5	9.	
Exterior Walls	**2 Vinyl/Aluminum**		
1.Wood	5.Stucco	9.T-111	
2.Vin/Al	6.Brick	10.Other	
3.Compos.	7.Stone	11.	
4.Asbestos	8.Concrete	12.	
Roof Surface	**3 Sheet Metal**		
1.Asphalt	4.Composit	7.	
2.Slate	5.Wood	8.	
3.Metal	6.Other	9.	
SF Masonry Trim	**0**		
OPEN-3-CUSTOM	**0**		
OPEN-4-CUSTOM	**0**		
Year Built	**1948**		
Year Remodeled	**0**		
Foundation	**1 Concrete**		
1.Concrete	4.Wood	7.	
2.C Block	5.Slab	8.	
3.Br/Stone	6.Piers	9.	
Basement	**4 Full Basement**		
1.1/4 Bmt	4.Full Bmt	7.	
2.1/2 Bmt	5.None	8.	
3.3/4 Bmt	6.	9.None	
Bsmt Gar # Cars	**0**		
Wet Basement	**1 Dry Basement**		
1.Dry	4.	7.	
2.Damp	5.	8.	
3.Wet	6.	9.	

SF Bsmt Living	**0**		
Fin Bsmt Grade	**0 0**		
OPEN 5 OPTIONAL	**0**		
Heat Type	**100%**	**5 Forced Warm Air**	
1.HWBB	5.FWA	9.No Heat	
2.HWCI	6.GravWA	10.	
3.H Pump	7.Electric	11.	
4.Steam	8.Fl/Wall	12.	
Cool Type	**0%**	**9 None**	
1.Refrig	4.W&C Air	7.	
2.Evapor	5.	8.	
3.H Pump	6.	9.None	
Kitchen Style	**2 Typical**		
1.Modern	4.Obsolete	7.	
2.Typical	5.	8.	
3.Old Type	6.	9.None	
Bath(s) Style	**2 Typical Bath(s)**		
1.Modern	4.Obsolete	7.	
2.Typical	5.	8.	
3.Old Type	6.	9.None	
# Rooms	**5**		
# Bedrooms	**3**		
# Full Baths	**1**		
# Half Baths	**0**		
# Addn Fixtures	**0**		
# Fireplaces	**0**		

TRIO Software
A Division of Harris Computer Systems

Layout	**1 Typical**		
1.Typical	4.	7.	
2.Inadeq	5.	8.	
3.Poor	6.	9.	
Attic	**9 None**		
1.1/4 Fin	4.Full Fin	7.	
2.1/2 Fin	5.Fl/Stair	8.	
3.3/4 Fin	6.	9.None	
Insulation	**1 Full**		
1.Full	4.Minimal	7.	
2.Heavy	5.Partial	8.	
3.Capped	6.	9.None	
Unfinished %	**0%**		
Grade & Factor	**3 Average 95%**		
1.E Grade	4.B Grade	7.	
2.D Grade	5.A Grade	8.SC Grade	
3.C Grade	6.AA Grade	9.Same	
SQFT (Footprint)	**928**		
Condition	**5 Above Average**		
1.Poor	4.Avg	7.V G	
2.Fair	5.Avg+	8.Exc	
3.Avg-	6.Good	9.Same	
Phys. % Good	**0%**		
Funct. % Good	**100%**		
Functional Code	**9 None**		
1.Incomp	4.Delap	7.No Power	
2.O-Built	5.Bsmt	8.LongTerm	
3.Damage	6.Common	9.None	
Econ. % Good	**100%**		
Economic Code	**None**		
0.None	3.No Power	7.	
1.Location	4.Generate	8.	
2.Encroach	9.None	9.	
Entrance Code	**1 Interior Inspect**		
1.Interior	4.Vacant	7.	
2.Refusal	5.Estimate	8.	
3.Informed	6.Reviewed	9.	
Information Code	**1 Owner**		
1.Owner	4.Agent	7.	
2.Relative	5.Estimate	8.	
3.Tenant	6.Other	9.	

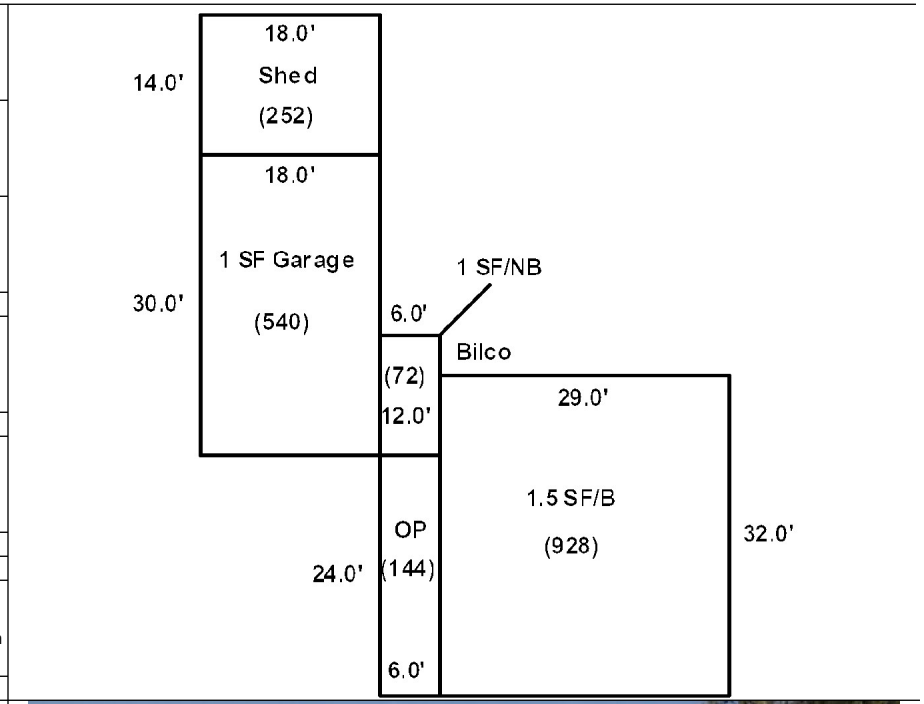

Date Inspected 10/19/2018

Additions, Outbuildings & Improvements

Type	Year	Units	Grade	Cond	Phys.	Funct.	Sound Value
21 Open Frame	1960	144	3 90	4	0 %	100 %	
1 One Story Frame	1950	72	3 90	5	0 %	100 %	
23 Frame Garage	1950	540	3 90	4	0 %	90 %	
24 Frame Shed	1960	252	2 110	3	0 %	80 %	
					%	%	
					%	%	
					%	%	
					%	%	
					%	%	
					%	%	

1.One Story Fram
2.Two Story Fram
3.Three Story Fr
4.1 & 1/2 Story
5.1 & 3/4 Story
6.2 & 1/2 Story
21.Open Frame Por
22.Encl Frame Por
23.Frame Garage
24.Frame Shed
25.Frame Bay Wind
26.1SFr Overhang
27.Unfin Basement
28.Unfinished Att
29.Finished Attic

Map Lot 008-026 Account 570 Location 1992 WASHBURN ROAD Card 1 Of 1 8/23/2023

JORDAN, SAMUEL T
1992 WASHBURN RD
WASHBURN ME 04786

B2513P34 B3842P7

Inspection Witnessed By:

X Date

No./Date	Description	Date Insp.

Notes:
*5-8-2019 -15% for size obs on Garage, -20% for attached shed.

Washburn

Property Data

Neighborhood **1 Neighborhood One**

Tree Growth Year **0**

1ST MORTGAGE **0**

2ND MORTGAGE **0**

Zone/Land Use **1 Residential**

Secondary Zone

Topography **2 Rolling**

1.Level 4.Below St 7.LevelBog
2.Rolling 5.Low 8.
3.Above St 6.Swampy 9.

Utilities **4 Drilled Well** **6 Septic System**

1.Public 4.Dr Well 7.Cesspool
2.Water 5.Dug Well 8.
3.Sewer 6.Septic 9.None

Street **1 Paved**

1.Paved 4.Proposed 7.
2.Semi Imp 5.R/O/W 8.
3.Gravel 6. 9.None

TG PLAN YEAR **0**

Tif District # **0**

Sale Data

Sale Date

Price

Sale Type **2 Land & Buildings**

1.Land 4.Mobile 7.C/I L&B
2.L & B 5.Other 8.
3.Building 6.C/I Land 9.

Financing **1 Conventional**

1.Convent 4.Seller 7.
2.FHA/VA 5.Private 8.
3.Assumed 6.Cash 9.Unknown

Validity **2 Related Parties**

1.Valid 4.Split 7.Renovate
2.Related 5.Partial 8.Other
3.Distress 6.Exempt 9.

Verified **5 Public Record**

1.Buyer 4.Agent 7.Family
2.Seller 5.Pub Rec 8.Other
3.Lender 6.MLS 9.

Assessment Record

Year	Land	Buildings	Exempt	Total
2012	7,100	70,900	8,800	69,200
2013	9,300	70,900	8,800	71,400
2015	9,300	70,900	9,000	71,200
2018	9,300	70,900	18,400	61,800
2019	17,100	103,000	20,000	100,100
2020	17,100	102,500	25,000	94,600
2021	17,100	103,000	25,000	95,100
2022	17,100	107,900	25,000	100,000
2023	22,700	127,700	25,000	125,400

Land Data

Front Foot	Type	Effective Frontage	Effective Depth	Influence Factor	Influence Code
11.Regular Lot				%	
12.Delta Triangle				%	
13.Nabla Triangle				%	
14.Rear Land				%	
15.Class I Road				%	
				%	
				%	
Square Foot		**Square Feet**			
16.Class II Road				%	
17.Municipal Rese				%	
18.Munic Sep Lago				%	
19.Gravel Pit				%	
20.Industrial Bas				%	
				%	
				%	
Fract. Acre		**Acreage/Sites**			
21.Developed Pave	21	1.00	100	%	0
22.Undev Paved (F	28	1.25	100	%	0
23.Developed Grav				%	
Acres				%	
24.Undev Gravel (				%	
25.Comm Base Pave				%	
26.Comm Base Grav				%	
27.Backlot				%	
28.Rear Land				%	
29.Pavement				%	

Total Acreage 2.25

Influence Codes

1.Unimproved
2.Excess Frtg
3.Topography
4.Size/Shape
5.Access
6.Restriction
7.Open Space
8.View/Environ
9.Fract Share
Acres
30.Utility R O W
31.Tillable
32.Pasture
33.Orchard
34.Softwood F&O
35.Mixed Wood F&O
36.Hardwood F&O
37.Softwood TG
38.Mixed Wood TG
39.Hardwood TG
40.Wasteland
41.Open Space
42.Mobile Home Si
43.Condo Site
44.Lot Improvemen
45.Subdivision Lo
46.Heavy Ind Sit

Washburn

Map Lot 008-026 | Account 570 | Location 1992 WASHBURN ROAD | Card 1 Of 1 | 8/23/2023

Building Style	**4 Cape Cod**		
1.Conv.	5.Garrison	9.Gambrel	
2.Ranch	6.Salt Box	10.Other	
3.R Ranch	7.Contemp	11.Split	
4.Cape	8.Log	12.	
Dwelling Units	**1**		
Other Units	**0**		
Stories	**5 One & 3/4 Story**		
1.1	4.1.5	7.	
2.2	5.1.75	8.	
3.3	6.2.5	9.	
Exterior Walls	**2 Vinyl/Aluminum**		
1.Wood	5.Stucco	9.T-111	
2.Vin/Al	6.Brick	10.Other	
3.Compos.	7.Stone	11.	
4.Asbestos	8.Concrete	12.	
Roof Surface	**1 Asphalt Shingles**		
1.Asphalt	4.Composit	7.	
2.Slate	5.Wood	8.	
3.Metal	6.Other	9.	
SF Masonry Trim	**128**		
OPEN-3-CUSTOM	**0**		
OPEN-4-CUSTOM	**0**		
Year Built	**1965**		
Year Remodeled	**0**		
Foundation	**1 Concrete**		
1.Concrete	4.Wood	7.	
2.C Block	5.Slab	8.	
3.Br/Stone	6.Piers	9.	
Basement	**4 Full Basement**		
1.1/4 Bmt	4.Full Bmt	7.	
2.1/2 Bmt	5.None	8.	
3.3/4 Bmt	6.	9.None	
Bsmt Gar # Cars	**0**		
Wet Basement	**1 Dry Basement**		
1.Dry	4.	7.	
2.Damp	5.	8.	
3.Wet	6.	9.	

SF Bsmt Living	**0**		
Fin Bsmt Grade	**0 0**		
OPEN 5 OPTIONAL	**0**		
Heat Type	**100%**	**5 Forced Warm Air**	
1.HWBB	5.FWA	9.No Heat	
2.HWCI	6.GravWA	10.	
3.H Pump	7.Electric	11.	
4.Steam	8.Fl/Wall	12.	
Cool Type	**50%**	**3 Heat Pump**	
1.Refrig	4.W&C Air	7.	
2.Evapor	5.	8.	
3.H Pump	6.	9.None	
Kitchen Style	**2 Typical**		
1.Modern	4.Obsolete	7.	
2.Typical	5.	8.	
3.Old Type	6.	9.None	
Bath(s) Style	**2 Typical Bath(s)**		
1.Modern	4.Obsolete	7.	
2.Typical	5.	8.	
3.Old Type	6.	9.None	
# Rooms	**6**		
# Bedrooms	**2**		
# Full Baths	**1**		
# Half Baths	**0**		
# Addn Fixtures	**0**		
# Fireplaces	**1**		

TRIO Software
A Division of Harris Computer Systems

Layout	**1 Typical**		
1.Typical	4.	7.	
2.Inadeq	5.	8.	
3.Poor	6.	9.	
Attic	**9 None**		
1.1/4 Fin	4.Full Fin	7.	
2.1/2 Fin	5.Fl/Stair	8.	
3.3/4 Fin	6.	9.None	
Insulation	**1 Full**		
1.Full	4.Minimal	7.	
2.Heavy	5.Partial	8.	
3.Capped	6.	9.None	
Unfinished %	**0%**		
Grade & Factor	**3 Average 95%**		
1.E Grade	4.B Grade	7.	
2.D Grade	5.A Grade	8.SC Grade	
3.C Grade	6.AA Grade	9.Same	
SQFT (Footprint)	**952**		
Condition	**5 Above Average**		
1.Poor	4.Avg	7.V G	
2.Fair	5.Avg+	8.Exc	
3.Avg-	6.Good	9.Same	
Phys. % Good	**0%**		
Funct. % Good	**100%**		
Functional Code	**9 None**		
1.Incomp	4.Delap	7.No Power	
2.O-Built	5.Bsmt	8.LongTerm	
3.Damage	6.Common	9.None	
Econ. % Good	**100%**		
Economic Code	**None**		
0.None	3.No Power	7.	
1.Location	4.Generate	8.	
2.Encroach	9.None	9.	
Entrance Code	**3 Information Only**		
1.Interior	4.Vacant	7.	
2.Refusal	5.Estimate	8.	
3.Informed	6.Reviewed	9.	
Information Code	**1 Owner**		
1.Owner	4.Agent	7.	
2.Relative	5.Estimate	8.	
3.Tenant	6.Other	9.	

Date Inspected 10/19/2018

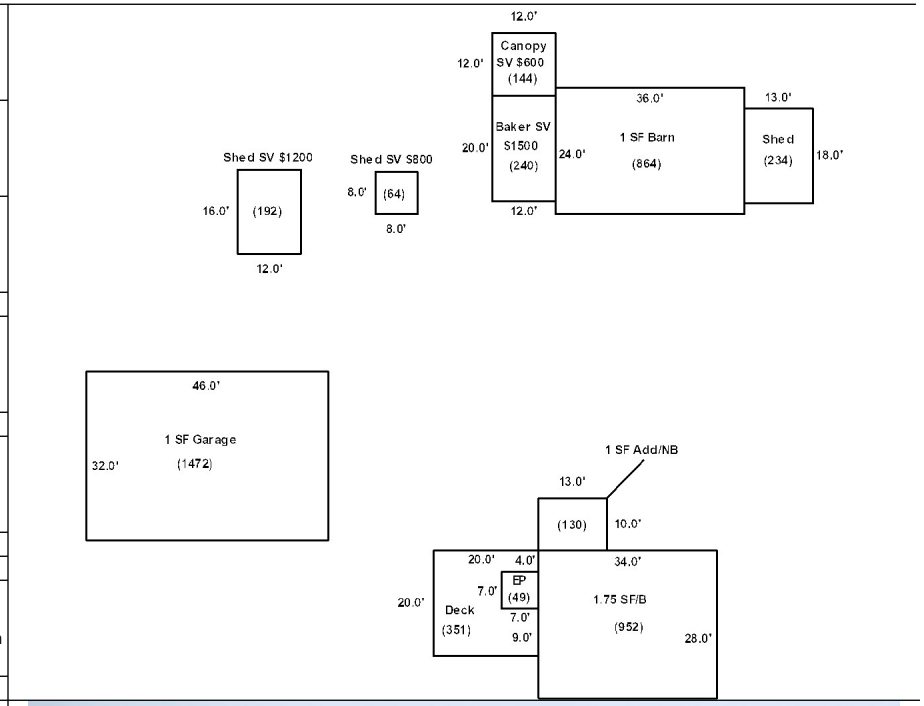

Additions, Outbuildings & Improvements

Type	Year	Units	Grade	Cond	Phys.	Funct.	Sound Value
68 Wood Deck	1990	351	3 100	3	0 %	100 %	
22 Encl Frame Porch	1980	49	3 90	4	0 %	100 %	
1 One Story Frame	1980	130	3 95	4	0 %	100 %	
23 Frame Garage	1970	1472	3 100	4	0 %	85 %	
59 Barn	1980	864	2 105	3	0 %	100 %	
24 Frame Shed	1980	234	2 100	2	0 %	80 %	
58 Baker	0				%	%	1,500
61 Canopy	0				%	%	600
24 Frame Shed	0				%	%	800
24 Frame Shed	0				%	%	1,200

1.One Story Fram
2.Two Story Fram
3.Three Story Fr
4.1 & 1/2 Story
5.1 & 3/4 Story
6.2 & 1/2 Story
21.Open Frame Por
22.Encl Frame Por
23.Frame Garage
24.Frame Shed
25.Frame Bay Wind
26.1SFr Overhang
27.Unfin Basement
28.Unfinished Att
29.Finished Attic

Map Lot 008-027 | Account 95 | Location 2016 WASHBURN ROAD | Card 1 Of 1 | 8/23/2023

RAYMOND, MASON
2016 WASHBURN ROAD
WASHBURN ME 04786

B6026P197

Previous Owner
ESTEY, BERNARD A JR
MOIR, STACY L
2016 WASHBURN ROAD
WASHBURN ME 04786
Sale Date: 6/16/2020

Previous Owner
HAYWARD JR., DONALD I.
440 Newburgh Road

Hermon ME 04401
Sale Date: 12/13/2018

Previous Owner
SIMON, RONALD J.
ANDERSON, LISA M.
2016 WASHBURN ROAD
WASHBURN ME 04786
Sale Date: 3/11/2017

Inspection Witnessed By:

X Date

No./Date	Description	Date Insp.

Notes:

Washburn

Property Data

Neighborhood **1 Neighborhood One**

Tree Growth Year **0**

1ST MORTGAGE **0**

2ND MORTGAGE **0**

Zone/Land Use **1 Residential**

Secondary Zone

Topography **2 Rolling**

1.Level 4.Below St 7.LevelBog
2.Rolling 5.Low 8.
3.Above St 6.Swampy 9.

Utilities **4 Drilled Well** **6 Septic System**

1.Public 4.Dr Well 7.Cesspool
2.Water 5.Dug Well 8.
3.Sewer 6.Septic 9.None

Street **1 Paved**

1.Paved 4.Proposed 7.
2.Semi Imp 5.R/O/W 8.
3.Gravel 6. 9.None

TG PLAN YEAR **0**

Tif District # **0**

Sale Data

Sale Date **6/16/2020**

Price **90,000**

Sale Type **2 Land & Buildings**

1.Land 4.Mobile 7.C/I L&B
2.L & B 5.Other 8.
3.Building 6.C/I Land 9.

Financing **9 Unknown**

1.Convent 4.Seller 7.
2.FHA/VA 5.Private 8.
3.Assumed 6.Cash 9.Unknown

Validity **1 Arms Length Sale**

1.Valid 4.Split 7.Renovate
2.Related 5.Partial 8.Other
3.Distress 6.Exempt 9.

Verified **5 Public Record**

1.Buyer 4.Agent 7.Family
2.Seller 5.Pub Rec 8.Other
3.Lender 6.MLS 9.

Assessment Record

Year	Land	Buildings	Exempt	Total
2012	15,800	33,000	14,080	34,720
2013	20,500	33,000	0	53,500
2015	20,500	33,000	0	53,500
2018	20,500	33,000	0	53,500
2019	35,000	22,600	0	57,600
2020	35,000	21,600	25,000	31,600
2021	35,000	22,600	0	57,600
2022	35,000	23,700	25,000	33,700
2023	43,500	28,200	25,000	46,700

Land Data

Front Foot	Type	Effective Frontage	Effective Depth	Influence Factor	Influence Code
11.Regular Lot				%	
12.Delta Triangle				%	
13.Nabla Triangle				%	
14.Rear Land				%	
15.Class I Road				%	
				%	
				%	
Square Foot		**Square Feet**			
16.Class II Road				%	
17.Municipal Rese				%	
18.Munic Sep Lago				%	
19.Gravel Pit				%	
20.Industrial Bas				%	
				%	
				%	
Fract. Acre		**Acreage/Sites**			
21.Developed Pave	21	1.00	100	%	0
22.Undev Paved (F	28	37.00	100	%	0
23.Developed Grav				%	
Acres				%	
24.Undev Gravel (				%	
25.Comm Base Pave				%	
26.Comm Base Grav				%	
27.Backlot				%	
28.Rear Land				%	
29.Pavement				%	

Total Acreage 38.00

Influence Codes

1.Unimproved
2.Excess Frtg
3.Topography
4.Size/Shape
5.Access
6.Restriction
7.Open Space
8.View/Environ
9.Fract Share
Acres
30.Utility R O W
31.Tillable
32.Pasture
33.Orchard
34.Softwood F&O
35.Mixed Wood F&O
36.Hardwood F&O
37.Softwood TG
38.Mixed Wood TG
39.Hardwood TG
40.Wasteland
41.Open Space
42.Mobile Home Si
43.Condo Site
44.Lot Improvemen
45.Subdivision Lo
46.Heavy Ind Sit

Washburn

Map Lot 008-027 | Account 95 | Location 2016 WASHBURN ROAD | Card 1 Of 1 | 8/23/2023

Building Style **0**		
1.Conv.	5.Garrison	9.Gambrel
2.Ranch	6.Salt Box	10.Other
3.R Ranch	7.Contemp	11.Split
4.Cape	8.Log	12.
Dwelling Units **0**		
Other Units **0**		
Stories **0**		
1.1	4.1.5	7.
2.2	5.1.75	8.
3.3	6.2.5	9.
Exterior Walls **0**		
1.Wood	5.Stucco	9.T-111
2.Vin/Al	6.Brick	10.Other
3.Compos.	7.Stone	11.
4.Asbestos	8.Concrete	12.
Roof Surface **0**		
1.Asphalt	4.Composit	7.
2.Slate	5.Wood	8.
3.Metal	6.Other	9.
SF Masonry Trim **0**		
OPEN-3-CUSTOM **0**		
OPEN-4-CUSTOM **0**		
Year Built **0**		
Year Remodeled **0**		
Foundation **0**		
1.Concrete	4.Wood	7.
2.C Block	5.Slab	8.
3.Br/Stone	6.Piers	9.
Basement **0**		
1.1/4 Bmt	4.Full Bmt	7.
2.1/2 Bmt	5.None	8.
3.3/4 Bmt	6.	9.None
Bsmt Gar # Cars **0**		
Wet Basement **0**		
1.Dry	4.	7.
2.Damp	5.	8.
3.Wet	6.	9.

SF Bsmt Living **0**		
Fin Bsmt Grade **0 0**		
OPEN 5 OPTIONAL **0**		
Heat Type **100%** **0**		
1.HWBB	5.FWA	9.No Heat
2.HWCI	6.GravWA	10.
3.H Pump	7.Electric	11.
4.Steam	8.Fl/Wall	12.
Cool Type **0%** **9 None**		
1.Refrig	4.W&C Air	7.
2.Evapor	5.	8.
3.H Pump	6.	9.None
Kitchen Style **0**		
1.Modern	4.Obsolete	7.
2.Typical	5.	8.
3.Old Type	6.	9.None
Bath(s) Style **0**		
1.Modern	4.Obsolete	7.
2.Typical	5.	8.
3.Old Type	6.	9.None
# Rooms **0**		
# Bedrooms **0**		
# Full Baths **0**		
# Half Baths **0**		
# Addn Fixtures **0**		
# Fireplaces **0**		

TRIO Software
A Division of Harris Computer Systems

Layout **0**		
1.Typical	4.	7.
2.Inadeq	5.	8.
3.Poor	6.	9.
Attic **0**		
1.1/4 Fin	4.Full Fin	7.
2.1/2 Fin	5.Fl/Stair	8.
3.3/4 Fin	6.	9.None
Insulation **0**		
1.Full	4.Minimal	7.
2.Heavy	5.Partial	8.
3.Capped	6.	9.None
Unfinished % **0%**		
Grade & Factor **0 0%**		
1.E Grade	4.B Grade	7.
2.D Grade	5.A Grade	8.SC Grade
3.C Grade	6.AA Grade	9.Same
SQFT (Footprint) **0**		
Condition **0**		
1.Poor	4.Avg	7.V G
2.Fair	5.Avg+	8.Exc
3.Avg-	6.Good	9.Same
Phys. % Good **0%**		
Funct. % Good **100%**		
Functional Code **9 None**		
1.Incomp	4.Delap	7.No Power
2.O-Built	5.Bsmt	8.LongTerm
3.Damage	6.Common	9.None
Econ. % Good **100%**		
Economic Code **None**		
0.None	3.No Power	7.
1.Location	4.Generate	8.
2.Encroach	9.None	9.
Entrance Code **5 Estimated**		
1.Interior	4.Vacant	7.
2.Refusal	5.Estimate	8.
3.Informed	6.Reviewed	9.
Information Code **5 Estimate**		
1.Owner	4.Agent	7.
2.Relative	5.Estimate	8.
3.Tenant	6.Other	9.

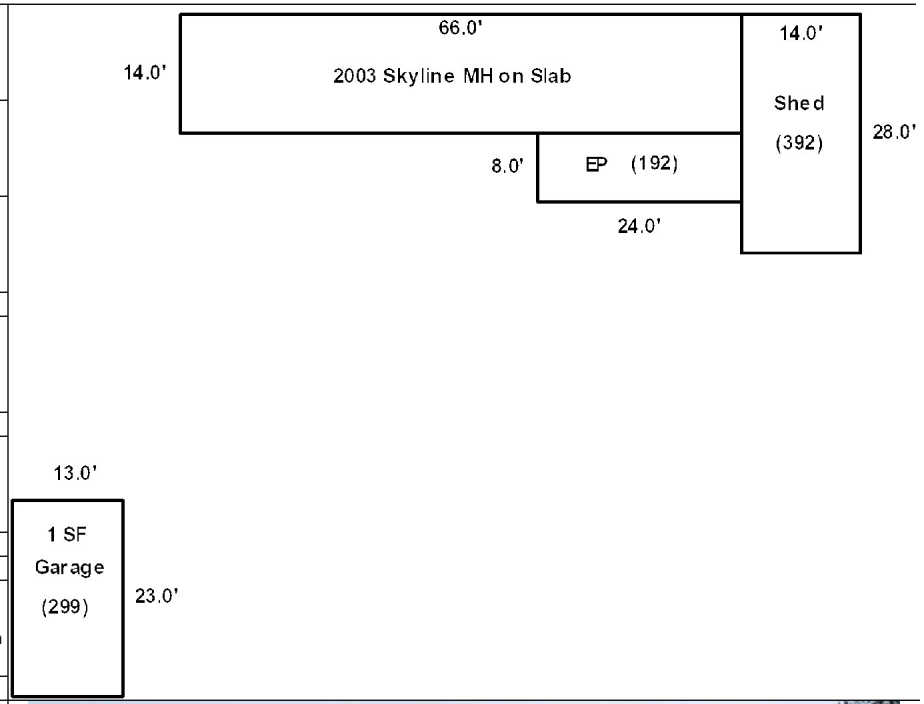

Date Inspected 10/19/2018

Additions, Outbuildings & Improvements

Type	Year	Units	Grade	Cond	Phys.	Funct.	Sound Value
942 Skyline M/H	2003	14x66	5 90	4	0 %	100 %	
48 Concrete Slab	2003	924	3 100	4	0 %	100 %	
22 Encl Frame Porch	2003	192	2 110	3	0 %	100 %	
24 Frame Shed	2005	392	2 105	3	0 %	100 %	
23 Frame Garage	1965	299	2 105	2	0 %	100 %	
					%	%	
					%	%	
					%	%	
					%	%	
					%	%	

1.One Story Fram
2.Two Story Fram
3.Three Story Fr
4.1 & 1/2 Story
5.1 & 3/4 Story
6.2 & 1/2 Story
21.Open Frame Por
22.Encl Frame Por
23.Frame Garage
24.Frame Shed
25.Frame Bay Wind
26.1SFr Overhang
27.Unfin Basement
28.Unfinished Att
29.Finished Attic

Map Lot 008-028 | Account 460 | Location WASHBURN ROAD | Card 1 Of 1 | 8/23/2023

SPERREY, RODNEY R
SPERREY, CHERYL M
PO BOX 284
WASHBURN ME 04786

B4776P161 B5144P147

Previous Owner
Flewelling, Frederic N.
Flewelling, Patsy A.
P.O. Box 398
Crouseville ME 04738
Sale Date: 11/24/2009

Inspection Witnessed By:

X Date

No./Date	Description	Date Insp.

Notes:

* Garage added after 04/01/2023 in field

Washburn

Property Data

Neighborhood	**1 Neighborhood One**
Tree Growth Year	**0**
1ST MORTGAGE	**0**
2ND MORTGAGE	**0**
Zone/Land Use	**1 Residential**
Secondary Zone	
Topography	**2 Rolling**

1.Level	4.Below St	7.LevelBog
2.Rolling	5.Low	8.
3.Above St	6.Swampy	9.

Utilities

1.Public	4.Dr Well	7.Cesspool
2.Water	5.Dug Well	8.
3.Sewer	6.Septic	9.None

Street **1 Paved**

1.Paved	4.Proposed	7.
2.Semi Imp	5.R/O/W	8.
3.Gravel	6.	9.None

TG PLAN YEAR	**2020**
Tif District #	**0**

Sale Data

Sale Date	**11/24/2009**
Price	**65,000**
Sale Type	**1 Land Only**

1.Land	4.Mobile	7.C/I L&B
2.L & B	5.Other	8.
3.Building	6.C/I Land	9.

Financing

1.Convent	4.Seller	7.
2.FHA/VA	5.Private	8.
3.Assumed	6.Cash	9.Unknown

Validity **2 Related Parties**

1.Valid	4.Split	7.Renovate
2.Related	5.Partial	8.Other
3.Distress	6.Exempt	9.

Verified **5 Public Record**

1.Buyer	4.Agent	7.Family
2.Seller	5.Pub Rec	8.Other
3.Lender	6.MLS	9.

Assessment Record

Year	Land	Buildings	Exempt	Total
2012	49,700	0	0	49,700
2013	62,700	500	0	63,200
2015	62,700	500	0	63,200
2018	66,200	1,500	0	67,700
2019	70,800	2,400	0	73,200
2020	70,900	2,400	0	73,300
2021	69,100	2,400	0	71,500
2022	69,400	2,400	0	71,800
2023	79,700	2,400	0	82,100

Land Data

Front Foot	Type	Effective Frontage	Effective Depth	Influence Factor	Influence Code
11.Regular Lot				%	
12.Delta Triangle				%	
13.Nabla Triangle				%	
14.Rear Land				%	
15.Class I Road				%	
				%	
				%	
Square Foot		**Square Feet**			
16.Class II Road				%	
17.Municipal Rese				%	
18.Munic Sep Lago				%	
19.Gravel Pit				%	
20.Industrial Bas				%	
				%	
				%	
Fract. Acre		**Acreage/Sites**			
21.Developed Pave	22	1.00	100	%	0
22.Undev Paved (F	28	93.00	100	%	0
23.Developed Grav	37	6.00	100	%	0
Acres	38	66.00	100	%	0
24.Undev Gravel (	39	23.00	100	%	0
25.Comm Base Pave	40	5.00	100	%	0
26.Comm Base Grav				%	
27.Backlot					
28.Rear Land					
29.Pavement					

Total Acreage 194.00

Influence Codes

1.Unimproved
2.Excess Frtg
3.Topography
4.Size/Shape
5.Access
6.Restriction
7.Open Space
8.View/Environ
9.Fract Share
Acres
30.Utility R O W
31.Tillable
32.Pasture
33.Orchard
34.Softwood F&O
35.Mixed Wood F&O
36.Hardwood F&O
37.Softwood TG
38.Mixed Wood TG
39.Hardwood TG
40.Wasteland
41.Open Space
42.Mobile Home Si
43.Condo Site
44.Lot Improvemen
45.Subdivision Lo
46.Heavy Ind Sit

Washburn

Map Lot 008-028 | Account 460 | Location WASHBURN ROAD | Card 1 Of 1 | 8/23/2023

Building Style **0**		
1.Conv.	5.Garrison	9.Gambrel
2.Ranch	6.Salt Box	10.Other
3.R Ranch	7.Contemp	11.Split
4.Cape	8.Log	12.
Dwelling Units **0**		
Other Units **0**		
Stories **0**		
1.1	4.1.5	7.
2.2	5.1.75	8.
3.3	6.2.5	9.
Exterior Walls **0**		
1.Wood	5.Stucco	9.T-111
2.Vin/Al	6.Brick	10.Other
3.Compos.	7.Stone	11.
4.Asbestos	8.Concrete	12.
Roof Surface **0**		
1.Asphalt	4.Composit	7.
2.Slate	5.Wood	8.
3.Metal	6.Other	9.
SF Masonry Trim **0**		
OPEN-3-CUSTOM **0**		
OPEN-4-CUSTOM **0**		
Year Built **0**		
Year Remodeled **0**		
Foundation **0**		
1.Concrete	4.Wood	7.
2.C Block	5.Slab	8.
3.Br/Stone	6.Piers	9.
Basement **0**		
1.1/4 Bmt	4.Full Bmt	7.
2.1/2 Bmt	5.None	8.
3.3/4 Bmt	6.	9.None
Bsmt Gar # Cars **0**		
Wet Basement **0**		
1.Dry	4.	7.
2.Damp	5.	8.
3.Wet	6.	9.

SF Bsmt Living **0**		
Fin Bsmt Grade **0 0**		
OPEN 5 OPTIONAL **0**		
Heat Type **100%** **0**		
1.HWBB	5.FWA	9.No Heat
2.HWCI	6.GravWA	10.
3.H Pump	7.Electric	11.
4.Steam	8.Fl/Wall	12.
Cool Type **0%** **9 None**		
1.Refrig	4.W&C Air	7.
2.Evapor	5.	8.
3.H Pump	6.	9.None
Kitchen Style **0**		
1.Modern	4.Obsolete	7.
2.Typical	5.	8.
3.Old Type	6.	9.None
Bath(s) Style **0**		
1.Modern	4.Obsolete	7.
2.Typical	5.	8.
3.Old Type	6.	9.None
# Rooms **0**		
# Bedrooms **0**		
# Full Baths **0**		
# Half Baths **0**		
# Addn Fixtures **0**		
# Fireplaces **0**		

TRIO Software
A Division of Harris Computer Systems

Layout **0**		
1.Typical	4.	7.
2.Inadeq	5.	8.
3.Poor	6.	9.
Attic **0**		
1.1/4 Fin	4.Full Fin	7.
2.1/2 Fin	5.Fl/Stair	8.
3.3/4 Fin	6.	9.None
Insulation **0**		
1.Full	4.Minimal	7.
2.Heavy	5.Partial	8.
3.Capped	6.	9.None
Unfinished % **0%**		
Grade & Factor **0 0%**		
1.E Grade	4.B Grade	7.
2.D Grade	5.A Grade	8.SC Grade
3.C Grade	6.AA Grade	9.Same
SQFT (Footprint) **0**		
Condition **0**		
1.Poor	4.Avg	7.V G
2.Fair	5.Avg+	8.Exc
3.Avg-	6.Good	9.Same
Phys. % Good **0%**		
Funct. % Good **100%**		
Functional Code **9 None**		
1.Incomp	4.Delap	7.No Power
2.O-Built	5.Bsmt	8.LongTerm
3.Damage	6.Common	9.None
Econ. % Good **100%**		
Economic Code **None**		
0.None	3.No Power	7.
1.Location	4.Generate	8.
2.Encroach	9.None	9.
Entrance Code **5 Estimated**		
1.Interior	4.Vacant	7.
2.Refusal	5.Estimate	8.
3.Informed	6.Reviewed	9.
Information Code **5 Estimate**		
1.Owner	4.Agent	7.
2.Relative	5.Estimate	8.
3.Tenant	6.Other	9.

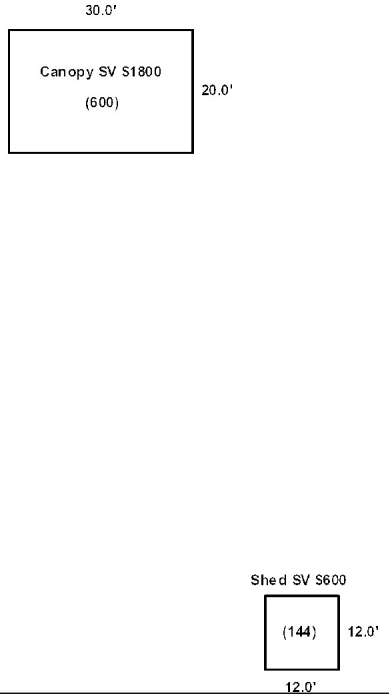

Date Inspected 10/19/2018

Additions, Outbuildings & Improvements

Type	Year	Units	Grade	Cond	Phys.	Funct.	Sound Value
61 Canopy	0				%	%	1,800
24 Frame Shed	0				%	%	600
					%	%	
					%	%	
					%	%	
					%	%	
					%	%	
					%	%	
					%	%	
					%	%	

1.One Story Fram
2.Two Story Fram
3.Three Story Fr
4.1 & 1/2 Story
5.1 & 3/4 Story
6.2 & 1/2 Story
21.Open Frame Por
22.Encl Frame Por
23.Frame Garage
24.Frame Shed
25.Frame Bay Wind
26.1SFr Overhang
27.Unfin Basement
28.Unfinished Att
29.Finished Attic

Map Lot 008-029 | Account 493 | Location 2116 Washburn Road | Card 1 Of 1 | 8/23/2023

Hernandez, James P
Hernandez, Rebecca E
PO BOX 1784
PRESQUE ISLE ME 04769

B2536P173

Property Data

Neighborhood **1 Neighborhood One**

Tree Growth Year **0**

1ST MORTGAGE **0**

2ND MORTGAGE **0**

Zone/Land Use **1 Residential**

Secondary Zone

Topography **2 Rolling**

1.Level	4.Below St	7.LevelBog
2.Rolling	5.Low	8.
3.Above St	6.Swampy	9.

Utilities **4 Drilled Well** **6 Septic System**

1.Public	4.Dr Well	7.Cesspool
2.Water	5.Dug Well	8.
3.Sewer	6.Septic	9.None

Street **1 Paved**

1.Paved	4.Proposed	7.
2.Semi Imp	5.R/O/W	8.
3.Gravel	6.	9.None

TG PLAN YEAR **0**

Tif District # **0**

Sale Data

Sale Date

Price

Sale Type

1.Land	4.Mobile	7.C/I L&B
2.L & B	5.Other	8.
3.Building	6.C/I Land	9.

Financing

1.Convent	4.Seller	7.
2.FHA/VA	5.Private	8.
3.Assumed	6.Cash	9.Unknown

Validity

1.Valid	4.Split	7.Renovate
2.Related	5.Partial	8.Other
3.Distress	6.Exempt	9.

Verified

1.Buyer	4.Agent	7.Family
2.Seller	5.Pub Rec	8.Other
3.Lender	6.MLS	9.

Assessment Record

Year	Land	Buildings	Exempt	Total
2012	6,500	34,600	8,800	32,300
2013	8,500	34,600	8,800	34,300
2015	8,500	34,600	9,000	34,100
2018	8,500	34,600	18,400	24,700
2019	16,500	61,700	20,000	58,200
2020	16,500	61,600	25,000	53,100
2021	16,500	61,700	25,000	53,200
2022	16,500	64,700	25,000	56,200
2023	22,000	76,800	25,000	73,800

Land Data

Front Foot	Type	Effective Frontage	Effective Depth	Influence Factor	Influence Code
11.Regular Lot				%	
12.Delta Triangle				%	
13.Nabla Triangle				%	
14.Rear Land				%	
15.Class I Road				%	
				%	
				%	
Square Foot		**Square Feet**			
16.Class II Road				%	
17.Municipal Rese				%	
18.Munic Sep Lago				%	
19.Gravel Pit				%	
20.Industrial Bas				%	
				%	
				%	
Fract. Acre		**Acreage/Sites**			
21.Developed Pave	21	1.00		100 %	0
22.Undev Paved (F				%	
23.Developed Grav				%	
Acres				%	
24.Undev Gravel (				%	
25.Comm Base Pave				%	
26.Comm Base Grav				%	
27.Backlot				%	
28.Rear Land				%	
29.Pavement				%	

Total Acreage 1.00

Influence Codes

1.Unimproved
2.Excess Frtg
3.Topography
4.Size/Shape
5.Access
6.Restriction
7.Open Space
8.View/Environ
9.Fract Share
Acres
30.Utility R O W
31.Tillable
32.Pasture
33.Orchard
34.Softwood F&O
35.Mixed Wood F&O
36.Hardwood F&O
37.Softwood TG
38.Mixed Wood TG
39.Hardwood TG
40.Wasteland
41.Open Space
42.Mobile Home Si
43.Condo Site
44.Lot Improvemen
45.Subdivision Lo
46.Heavy Ind Sit

Inspection Witnessed By:

X Date

No./Date	Description	Date Insp.

Notes:

*5-10-2019 -10% for 1 SF/B for no flooring, check 2020 for completion. Loft area priced as finish attic.

Washburn

Washburn

Map Lot 008-029 | Account 493 | Location 2116 Washburn Road | Card 1 Of 1 | 8/23/2023

Building Style	**4 Cape Cod**		
1.Conv.	5.Garrison	9.Gambrel	
2.Ranch	6.Salt Box	10.Other	
3.R Ranch	7.Contemp	11.Split	
4.Cape	8.Log	12.	
Dwelling Units	**1**		
Other Units	**0**		
Stories	**4 One & 1/2 Story**		
1.1	4.1.5	7.	
2.2	5.1.75	8.	
3.3	6.2.5	9.	
Exterior Walls	**2 Vinyl/Aluminum**		
1.Wood	5.Stucco	9.T-111	
2.Vin/Al	6.Brick	10.Other	
3.Compos.	7.Stone	11.	
4.Asbestos	8.Concrete	12.	
Roof Surface	**3 Sheet Metal**		
1.Asphalt	4.Composit	7.	
2.Slate	5.Wood	8.	
3.Metal	6.Other	9.	
SF Masonry Trim	**0**		
OPEN-3-CUSTOM	**0**		
OPEN-4-CUSTOM	**0**		
Year Built	**1880**		
Year Remodeled	**0**		
Foundation	**3 Brick &/or Stone**		
1.Concrete	4.Wood	7.	
2.C Block	5.Slab	8.	
3.Br/Stone	6.Piers	9.	
Basement	**4 Full Basement**		
1.1/4 Bmt	4.Full Bmt	7.	
2.1/2 Bmt	5.None	8.	
3.3/4 Bmt	6.	9.None	
Bsmt Gar # Cars	**0**		
Wet Basement	**2 Damp Basement**		
1.Dry	4.	7.	
2.Damp	5.	8.	
3.Wet	6.	9.	

SF Bsmt Living	**0**		
Fin Bsmt Grade	**0 0**		
OPEN 5 OPTIONAL	**0**		
Heat Type	**100%**	**5 Forced Warm Air**	
1.HWBB	5.FWA	9.No Heat	
2.HWCI	6.GravWA	10.	
3.H Pump	7.Electric	11.	
4.Steam	8.Fl/Wall	12.	
Cool Type	**0%**	**9 None**	
1.Refrig	4.W&C Air	7.	
2.Evapor	5.	8.	
3.H Pump	6.	9.None	
Kitchen Style	**2 Typical**		
1.Modern	4.Obsolete	7.	
2.Typical	5.	8.	
3.Old Type	6.	9.None	
Bath(s) Style	**2 Typical Bath(s)**		
1.Modern	4.Obsolete	7.	
2.Typical	5.	8.	
3.Old Type	6.	9.None	
# Rooms	**8**		
# Bedrooms	**3**		
# Full Baths	**1**		
# Half Baths	**0**		
# Addn Fixtures	**0**		
# Fireplaces	**0**		

TRIO Software
A Division of Harris Computer Systems

Layout	**1 Typical**		
1.Typical	4.	7.	
2.Inadeq	5.	8.	
3.Poor	6.	9.	
Attic	**9 None**		
1.1/4 Fin	4.Full Fin	7.	
2.1/2 Fin	5.Fl/Stair	8.	
3.3/4 Fin	6.	9.None	
Insulation	**1 Full**		
1.Full	4.Minimal	7.	
2.Heavy	5.Partial	8.	
3.Capped	6.	9.None	
Unfinished %	**0%**		
Grade & Factor	**2 Fair 110%**		
1.E Grade	4.B Grade	7.	
2.D Grade	5.A Grade	8.SC Grade	
3.C Grade	6.AA Grade	9.Same	
SQFT (Footprint)	**923**		
Condition	**5 Above Average**		
1.Poor	4.Avg	7.V G	
2.Fair	5.Avg+	8.Exc	
3.Avg-	6.Good	9.Same	
Phys. % Good	**0%**		
Funct. % Good	**100%**		
Functional Code	**9 None**		
1.Incomp	4.Delap	7.No Power	
2.O-Built	5.Bsmt	8.LongTerm	
3.Damage	6.Common	9.None	
Econ. % Good	**100%**		
Economic Code	**None**		
0.None	3.No Power	7.	
1.Location	4.Generate	8.	
2.Encroach	9.None	9.	
Entrance Code	**1 Interior Inspect**		
1.Interior	4.Vacant	7.	
2.Refusal	5.Estimate	8.	
3.Informed	6.Reviewed	9.	
Information Code	**1 Owner**		
1.Owner	4.Agent	7.	
2.Relative	5.Estimate	8.	
3.Tenant	6.Other	9.	

Date Inspected 5/01/2019

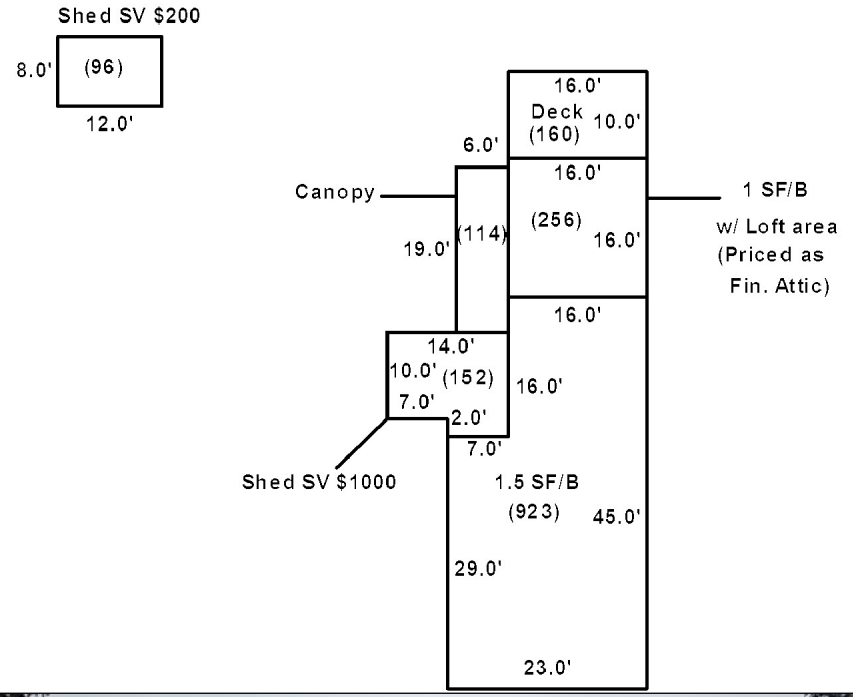

Additions, Outbuildings & Improvements

Type	Year	Units	Grade	Cond	Phys.	Funct.	Sound Value
20 1 Story/Bsmt	1900	256	2 110	5	0 %	90 %	
29 Finished Attic	1950	256	2 90	3	0 %	100 %	
68 Wood Deck	1990	160	3 100	3	0 %	100 %	
61 Canopy	1980	114	3 90	4	0 %	100 %	
24 Frame Shed	0				%	%	1,000
24 Frame Shed	0				%	%	200
					%	%	
					%	%	
					%	%	
					%	%	

1.One Story Fram
2.Two Story Fram
3.Three Story Fr
4.1 & 1/2 Story
5.1 & 3/4 Story
6.2 & 1/2 Story
21.Open Frame Por
22.Encl Frame Por
23.Frame Garage
24.Frame Shed
25.Frame Bay Wind
26.1SFr Overhang
27.Unfin Basement
28.Unfinished Att
29.Finished Attic

Map Lot 008-030 | Account 152 | Location 2196 WASHBURN ROAD | Card 1 Of 1 | 8/23/2023

Federal National Mortgage Assoc.
14221 Dallas Parkway Suite 100
Dallas TX 75254

B6357P175

Previous Owner
BEGLAN, WILLIAM T
P.O. BOX 949

CARIBOU ME 04736
Sale Date: 8/01/2022

Inspection Witnessed By:

X Date

No./Date	Description	Date Insp.

Notes:
*2-19-2019 -20% for attached garage.

Property Data

Neighborhood **1 Neighborhood One**

Tree Growth Year **0**

1ST MORTGAGE **0**

2ND MORTGAGE **0**

Zone/Land Use **1 Residential**

Secondary Zone

Topography **2 Rolling**

1.Level	4.Below St	7.LevelBog
2.Rolling	5.Low	8.
3.Above St	6.Swampy	9.

Utilities **4 Drilled Well** **6 Septic System**

1.Public	4.Dr Well	7.Cesspool
2.Water	5.Dug Well	8.
3.Sewer	6.Septic	9.None

Street **1 Paved**

1.Paved	4.Proposed	7.
2.Semi Imp	5.R/O/W	8.
3.Gravel	6.	9.None

TG PLAN YEAR **0**

Tif District # **0**

Sale Data

Sale Date **8/01/2022**

Price **33,967**

Sale Type **2 Land & Buildings**

1.Land	4.Mobile	7.C/I L&B
2.L & B	5.Other	8.
3.Building	6.C/I Land	9.

Financing **1 Conventional**

1.Convent	4.Seller	7.
2.FHA/VA	5.Private	8.
3.Assumed	6.Cash	9.Unknown

Validity **3 Distressed Sale**

1.Valid	4.Split	7.Renovate
2.Related	5.Partial	8.Other
3.Distress	6.Exempt	9.

Verified **5 Public Record**

1.Buyer	4.Agent	7.Family
2.Seller	5.Pub Rec	8.Other
3.Lender	6.MLS	9.

Assessment Record

Year	Land	Buildings	Exempt	Total
2012	8,600	34,200	8,800	34,000
2013	11,100	34,200	8,800	36,500
2015	11,100	34,200	9,000	36,300
2018	11,100	34,200	0	45,300
2019	18,600	31,700	0	50,300
2020	18,600	31,200	0	49,800
2021	18,600	31,700	0	50,300
2022	18,600	33,300	0	51,900
2023	24,400	39,600	0	64,000

Land Data

Front Foot	Type	Effective Frontage	Effective Depth	Influence Factor	Influence Code
11.Regular Lot				%	
12.Delta Triangle				%	
13.Nabla Triangle				%	
14.Rear Land				%	
15.Class I Road				%	
				%	
				%	
Square Foot		**Square Feet**			
16.Class II Road				%	
17.Municipal Rese				%	
18.Munic Sep Lago				%	
19.Gravel Pit				%	
20.Industrial Bas				%	
				%	
				%	
Fract. Acre		**Acreage/Sites**			
21.Developed Pave	21	1.00	100	%	0
22.Undev Paved (F	28	4.10	100	%	0
23.Developed Grav				%	
Acres				%	
24.Undev Gravel (				%	
25.Comm Base Pave				%	
26.Comm Base Grav				%	
27.Backlot				%	
28.Rear Land				%	
29.Pavement				%	

Total Acreage 5.10

Influence Codes

1.Unimproved
2.Excess Frtg
3.Topography
4.Size/Shape
5.Access
6.Restriction
7.Open Space
8.View/Environ
9.Fract Share
Acres
30.Utility R O W
31.Tillable
32.Pasture
33.Orchard
34.Softwood F&O
35.Mixed Wood F&O
36.Hardwood F&O
37.Softwood TG
38.Mixed Wood TG
39.Hardwood TG
40.Wasteland
41.Open Space
42.Mobile Home Si
43.Condo Site
44.Lot Improvemen
45.Subdivision Lo
46.Heavy Ind Sit

Washburn

Washburn

Map Lot 008-030 | Account 152 | Location 2196 WASHBURN ROAD | Card 1 Of 1 | 8/23/2023

Building Style		
1.Conv.	5.Garrison	9.Gambrel
2.Ranch	6.Salt Box	10.Other
3.R Ranch	7.Contemp	11.Split
4.Cape	8.Log	12.

Dwelling Units
Other Units

Stories		
1.1	4.1.5	7.
2.2	5.1.75	8.
3.3	6.2.5	9.

Exterior Walls		
1.Wood	5.Stucco	9.T-111
2.Vin/Al	6.Brick	10.Other
3.Compos.	7.Stone	11.
4.Asbestos	8.Concrete	12.

Roof Surface		
1.Asphalt	4.Composit	7.
2.Slate	5.Wood	8.
3.Metal	6.Other	9.

SF Masonry Trim
OPEN-3-CUSTOM
OPEN-4-CUSTOM
Year Built
Year Remodeled

Foundation		
1.Concrete	4.Wood	7.
2.C Block	5.Slab	8.
3.Br/Stone	6.Piers	9.

Basement		
1.1/4 Bmt	4.Full Bmt	7.
2.1/2 Bmt	5.None	8.
3.3/4 Bmt	6.	9.None

Bsmt Gar # Cars

Wet Basement		
1.Dry	4.	7.
2.Damp	5.	8.
3.Wet	6.	9.

SF Bsmt Living
Fin Bsmt Grade
OPEN 5 OPTIONAL

Heat Type **100%**		
1.HWBB	5.FWA	9.No Heat
2.HWCI	6.GravWA	10.
3.H Pump	7.Electric	11.
4.Steam	8.Fl/Wall	12.

Cool Type **0%**		
1.Refrig	4.W&C Air	7.
2.Evapor	5.	8.
3.H Pump	6.	9.None

Kitchen Style		
1.Modern	4.Obsolete	7.
2.Typical	5.	8.
3.Old Type	6.	9.None

Bath(s) Style		
1.Modern	4.Obsolete	7.
2.Typical	5.	8.
3.Old Type	6.	9.None

Rooms
Bedrooms
Full Baths
Half Baths
Addn Fixtures
Fireplaces

TRIO Software
A Division of Harris Computer Systems

Layout		
1.Typical	4.	7.
2.Inadeq	5.	8.
3.Poor	6.	9.

Attic		
1.1/4 Fin	4.Full Fin	7.
2.1/2 Fin	5.Fl/Stair	8.
3.3/4 Fin	6.	9.None

Insulation		
1.Full	4.Minimal	7.
2.Heavy	5.Partial	8.
3.Capped	6.	9.None

Unfinished %

Grade & Factor		
1.E Grade	4.B Grade	7.
2.D Grade	5.A Grade	8.SC Grade
3.C Grade	6.AA Grade	9.Same

SQFT (Footprint)

Condition		
1.Poor	4.Avg	7.V G
2.Fair	5.Avg+	8.Exc
3.Avg-	6.Good	9.Same

Phys. % Good
Funct. % Good

Functional Code		
1.Incomp	4.Delap	7.No Power
2.O-Built	5.Bsmt	8.LongTerm
3.Damage	6.Common	9.None

Econ. % Good

Economic Code		
0.None	3.No Power	7.
1.Location	4.Generate	8.
2.Encroach	9.None	9.

Entrance Code **5 Estimated**		
1.Interior	4.Vacant	7.
2.Refusal	5.Estimate	8.
3.Informed	6.Reviewed	9.

Information Code **5 Estimate**		
1.Owner	4.Agent	7.
2.Relative	5.Estimate	8.
3.Tenant	6.Other	9.

Date Inspected 10/19/2018

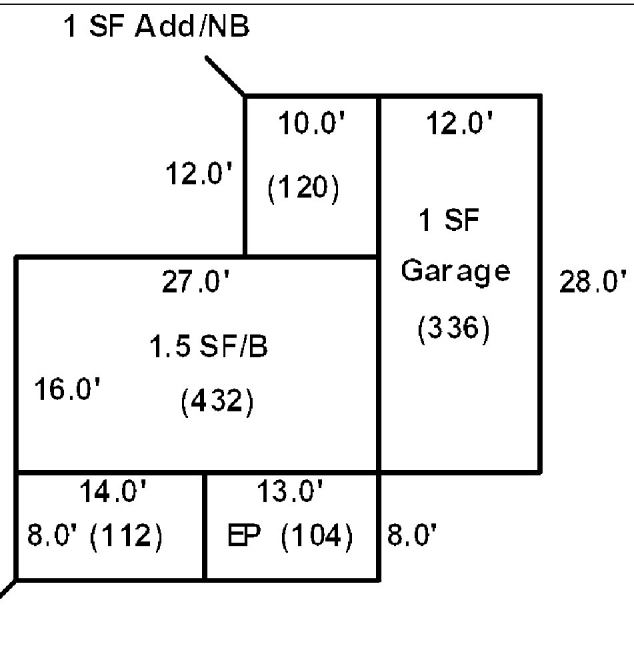

Additions, Outbuildings & Improvements

Type	Year	Units	Grade	Cond	Phys.	Funct.	Sound Value
					%	%	
					%	%	
					%	%	
					%	%	
					%	%	
					%	%	
					%	%	
					%	%	
					%	%	
					%	%	

1.One Story Fram
2.Two Story Fram
3.Three Story Fr
4.1 & 1/2 Story
5.1 & 3/4 Story
6.2 & 1/2 Story
21.Open Frame Por
22.Encl Frame Por
23.Frame Garage
24.Frame Shed
25.Frame Bay Wind
26.1SFr Overhang
27.Unfin Basement
28.Unfinished Att
29.Finished Attic

Map Lot 008-030A | Account 22 | Location 13 Borden Road | Card 1 Of 1 | 8/23/2023

Boucher, Jeannot W
Boucher, Jennifer C
13 BORDEN RD
WASHBURN ME 04786

B3765P337

Property Data

Neighborhood **1 Neighborhood One**

Tree Growth Year **0**

1ST MORTGAGE **0**

2ND MORTGAGE **0**

Zone/Land Use **1 Residential**

Secondary Zone

Topography **2 Rolling**

1.Level	4.Below St	7.LevelBog
2.Rolling	5.Low	8.
3.Above St	6.Swampy	9.

Utilities **4 Drilled Well** **6 Septic System**

1.Public	4.Dr Well	7.Cesspool
2.Water	5.Dug Well	8.
3.Sewer	6.Septic	9.None

Street **3 Gravel**

1.Paved	4.Proposed	7.
2.Semi Imp	5.R/O/W	8.
3.Gravel	6.	9.None

TG PLAN YEAR **0**

Tif District # **0**

Sale Data

Sale Date

Price

Sale Type **2 Land & Buildings**

1.Land	4.Mobile	7.C/I L&B
2.L & B	5.Other	8.
3.Building	6.C/I Land	9.

Financing

1.Convent	4.Seller	7.
2.FHA/VA	5.Private	8.
3.Assumed	6.Cash	9.Unknown

Validity

1.Valid	4.Split	7.Renovate
2.Related	5.Partial	8.Other
3.Distress	6.Exempt	9.

Verified

1.Buyer	4.Agent	7.Family
2.Seller	5.Pub Rec	8.Other
3.Lender	6.MLS	9.

Assessment Record

Year	Land	Buildings	Exempt	Total
2012	25,400	52,000	8,800	68,600
2013	33,100	52,000	8,800	76,300
2015	33,100	52,000	9,000	76,100
2018	33,100	52,000	18,400	66,700
2019	57,200	76,300	20,000	113,500
2020	57,200	76,200	25,000	108,400
2021	57,200	76,300	25,000	108,500
2022	57,200	80,000	25,000	112,200
2023	65,700	94,700	25,000	135,400

Land Data

Front Foot	Type	Effective Frontage	Effective Depth	Influence Factor	Influence Code
11.Regular Lot				%	
12.Delta Triangle				%	
13.Nabla Triangle				%	
14.Rear Land				%	
15.Class I Road				%	
				%	
				%	
Square Foot		**Square Feet**			
16.Class II Road				%	
17.Municipal Rese				%	
18.Munic Sep Lago				%	
19.Gravel Pit				%	
20.Industrial Bas				%	
				%	
				%	
Fract. Acre		**Acreage/Sites**			
21.Developed Pave	23	1.00	100	%	0
22.Undev Paved (F	28	37.00	100	%	0
23.Developed Grav	31	24.20	100	%	0
Acres				%	
24.Undev Gravel (				%	
25.Comm Base Pave				%	
26.Comm Base Grav				%	
27.Backlot				%	
28.Rear Land					
29.Pavement					

Total Acreage 62.20

Influence Codes

1.Unimproved
2.Excess Frtg
3.Topography
4.Size/Shape
5.Access
6.Restriction
7.Open Space
8.View/Environ
9.Fract Share
Acres
30.Utility R O W
31.Tillable
32.Pasture
33.Orchard
34.Softwood F&O
35.Mixed Wood F&O
36.Hardwood F&O
37.Softwood TG
38.Mixed Wood TG
39.Hardwood TG
40.Wasteland
41.Open Space
42.Mobile Home Si
43.Condo Site
44.Lot Improvemen
45.Subdivision Lo
46.Heavy Ind Sit

Inspection Witnessed By:

X Date

No./Date	Description	Date Insp.

Notes:

*1-3-2019 Wood is the main source of heat but there is some radiant throughout the house, adjusted in the dwelling grade. -20% for attached shed.

Washburn

Washburn

Map Lot 008-030A | Account 22 | Location 13 Borden Road | Card 1 Of 1 | 8/23/2023

Building Style	**4 Cape Cod**		
1.Conv.	5.Garrison	9.Gambrel	
2.Ranch	6.Salt Box	10.Other	
3.R Ranch	7.Contemp	11.Split	
4.Cape	8.Log	12.	
Dwelling Units	**1**		
Other Units	**0**		
Stories	**4 One & 1/2 Story**		
1.1	4.1.5	7.	
2.2	5.1.75	8.	
3.3	6.2.5	9.	
Exterior Walls	**1 Wood Siding**		
1.Wood	5.Stucco	9.T-111	
2.Vin/Al	6.Brick	10.Other	
3.Compos.	7.Stone	11.	
4.Asbestos	8.Concrete	12.	
Roof Surface	**3 Sheet Metal**		
1.Asphalt	4.Composit	7.	
2.Slate	5.Wood	8.	
3.Metal	6.Other	9.	
SF Masonry Trim	**0**		
OPEN-3-CUSTOM	**0**		
OPEN-4-CUSTOM	**0**		
Year Built	**2003**		
Year Remodeled	**0**		
Foundation	**5 Concrete Slab**		
1.Concrete	4.Wood	7.	
2.C Block	5.Slab	8.	
3.Br/Stone	6.Piers	9.	
Basement	**9 No Basement**		
1.1/4 Bmt	4.Full Bmt	7.	
2.1/2 Bmt	5.None	8.	
3.3/4 Bmt	6.	9.None	
Bsmt Gar # Cars	**0**		
Wet Basement	**9 No Basement**		
1.Dry	4.	7.	
2.Damp	5.	8.	
3.Wet	6.	9.	

SF Bsmt Living	**0**		
Fin Bsmt Grade	**0 0**		
OPEN 5 OPTIONAL	**0**		
Heat Type	**100%**	**9 Not Heated**	
1.HWBB	5.FWA	9.No Heat	
2.HWCI	6.GravWA	10.	
3.H Pump	7.Electric	11.	
4.Steam	8.Fl/Wall	12.	
Cool Type	**0%**	**9 None**	
1.Refrig	4.W&C Air	7.	
2.Evapor	5.	8.	
3.H Pump	6.	9.None	
Kitchen Style	**2 Typical**		
1.Modern	4.Obsolete	7.	
2.Typical	5.	8.	
3.Old Type	6.	9.None	
Bath(s) Style	**2 Typical Bath(s)**		
1.Modern	4.Obsolete	7.	
2.Typical	5.	8.	
3.Old Type	6.	9.None	
# Rooms	**5**		
# Bedrooms	**3**		
# Full Baths	**1**		
# Half Baths	**0**		
# Addn Fixtures	**0**		
# Fireplaces	**0**		

TRIO Software
A Division of Harris Computer Systems

Layout	**1 Typical**		
1.Typical	4.	7.	
2.Inadeq	5.	8.	
3.Poor	6.	9.	
Attic	**9 None**		
1.1/4 Fin	4.Full Fin	7.	
2.1/2 Fin	5.Fl/Stair	8.	
3.3/4 Fin	6.	9.None	
Insulation	**1 Full**		
1.Full	4.Minimal	7.	
2.Heavy	5.Partial	8.	
3.Capped	6.	9.None	
Unfinished %	**0%**		
Grade & Factor	**3 Average 95%**		
1.E Grade	4.B Grade	7.	
2.D Grade	5.A Grade	8.SC Grade	
3.C Grade	6.AA Grade	9.Same	
SQFT (Footprint)	**672**		
Condition	**4 Average**		
1.Poor	4.Avg	7.V G	
2.Fair	5.Avg+	8.Exc	
3.Avg-	6.Good	9.Same	
Phys. % Good	**0%**		
Funct. % Good	**100%**		
Functional Code	**9 None**		
1.Incomp	4.Delap	7.No Power	
2.O-Built	5.Bsmt	8.LongTerm	
3.Damage	6.Common	9.None	
Econ. % Good	**100%**		
Economic Code	**None**		
0.None	3.No Power	7.	
1.Location	4.Generate	8.	
2.Encroach	9.None	9.	
Entrance Code	**1 Interior Inspect**		
1.Interior	4.Vacant	7.	
2.Refusal	5.Estimate	8.	
3.Informed	6.Reviewed	9.	
Information Code	**1 Owner**		
1.Owner	4.Agent	7.	
2.Relative	5.Estimate	8.	
3.Tenant	6.Other	9.	

Date Inspected 10/19/2018

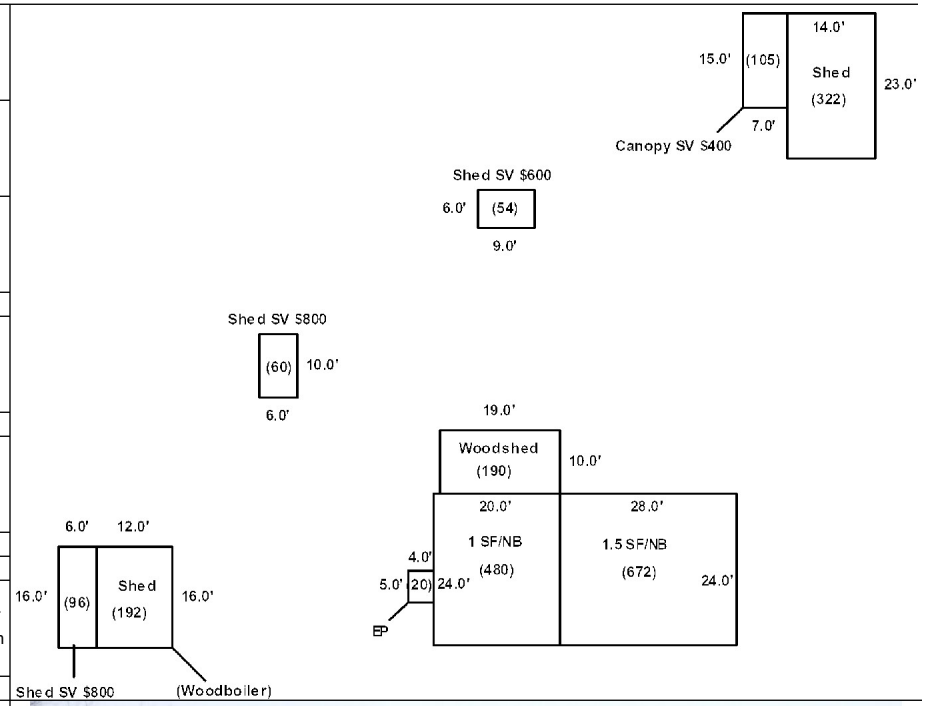

Additions, Outbuildings & Improvements

Type	Year	Units	Grade	Cond	Phys.	Funct.	Sound Value
1 One Story Frame	2003	480	3 90	4	0 %	100 %	
24 Frame Shed	2003	190	2 90	2	0 %	80 %	
22 Encl Frame Porch	2003	20	2 105	3	0 %	100 %	
24 Frame Shed	2005	322	2 110	4	0 %	100 %	
61 Canopy	0				%	%	400
24 Frame Shed	0				%	%	600
24 Frame Shed	0				%	%	800
24 Frame Shed	2003	192	2 105	3	0 %	100 %	
24 Frame Shed	0				%	%	800
					%	%	

1.One Story Fram
2.Two Story Fram
3.Three Story Fr
4.1 & 1/2 Story
5.1 & 3/4 Story
6.2 & 1/2 Story
21.Open Frame Por
22.Encl Frame Por
23.Frame Garage
24.Frame Shed
25.Frame Bay Wind
26.1SFr Overhang
27.Unfin Basement
28.Unfinished Att
29.Finished Attic

Map Lot 008-030B | Account 650 | Location 2168 WASHBURN ROAD | Card 1 Of 1 | 8/23/2023

LABBE, ROLAND SR
LABBE, LORI
2168 WASHBURN ROAD
WASHBURN ME 04786

B6304P21

Previous Owner
Connolly, Roger Trustee of
High Meadow Realty Trust
P.O. Box 130
Caribou ME 04736
Sale Date: 4/29/2010

Inspection Witnessed By:

X Date

No./Date	Description	Date Insp.

Notes:

Washburn

Property Data

Neighborhood **1 Neighborhood One**

Tree Growth Year **0**

1ST MORTGAGE **0**

2ND MORTGAGE **0**

Zone/Land Use **1 Residential**

Secondary Zone

Topography **2 Rolling**

1.Level	4.Below St	7.LevelBog
2.Rolling	5.Low	8.
3.Above St	6.Swampy	9.

Utilities **4 Drilled Well** **6 Septic System**

1.Public	4.Dr Well	7.Cesspool
2.Water	5.Dug Well	8.
3.Sewer	6.Septic	9.None

Street **1 Paved**

1.Paved	4.Proposed	7.
2.Semi Imp	5.R/O/W	8.
3.Gravel	6.	9.None

TG PLAN YEAR **0**

Tif District # **0**

Sale Data

Sale Date **4/29/2010**

Price **12,000**

Sale Type **2 Land & Buildings**

1.Land	4.Mobile	7.C/I L&B
2.L & B	5.Other	8.
3.Building	6.C/I Land	9.

Financing

1.Convent	4.Seller	7.
2.FHA/VA	5.Private	8.
3.Assumed	6.Cash	9.Unknown

Validity **1 Arms Length Sale**

1.Valid	4.Split	7.Renovate
2.Related	5.Partial	8.Other
3.Distress	6.Exempt	9.

Verified **5 Public Record**

1.Buyer	4.Agent	7.Family
2.Seller	5.Pub Rec	8.Other
3.Lender	6.MLS	9.

Assessment Record

Year	Land	Buildings	Exempt	Total
2012	7,900	18,800	0	26,700
2013	11,500	14,100	8,800	16,800
2015	11,500	14,100	9,000	16,600
2018	11,500	14,100	0	25,600
2019	19,900	6,400	0	26,300
2020	19,900	6,400	0	26,300
2021	19,900	6,400	0	26,300
2022	19,900	6,600	0	26,500
2023	25,900	7,800	0	33,700

Land Data

Front Foot	Type	Effective Frontage	Effective Depth	Influence Factor	Influence Code
11.Regular Lot				%	
12.Delta Triangle				%	
13.Nabla Triangle				%	
14.Rear Land				%	
15.Class I Road				%	
				%	
				%	
Square Foot		**Square Feet**			
16.Class II Road				%	
17.Municipal Rese				%	
18.Munic Sep Lago				%	
19.Gravel Pit				%	
20.Industrial Bas				%	
				%	
				%	
Fract. Acre		**Acreage/Sites**			
21.Developed Pave	21	1.00	100	%	0
22.Undev Paved (F	28	6.70	100	%	0
23.Developed Grav				%	
Acres				%	
24.Undev Gravel (				%	
25.Comm Base Pave				%	
26.Comm Base Grav				%	
27.Backlot				%	
28.Rear Land				%	
29.Pavement				%	

Total Acreage 7.70

Influence Codes

1.Unimproved
2.Excess Frtg
3.Topography
4.Size/Shape
5.Access
6.Restriction
7.Open Space
8.View/Environ
9.Fract Share
Acres
30.Utility R O W
31.Tillable
32.Pasture
33.Orchard
34.Softwood F&O
35.Mixed Wood F&O
36.Hardwood F&O
37.Softwood TG
38.Mixed Wood TG
39.Hardwood TG
40.Wasteland
41.Open Space
42.Mobile Home Si
43.Condo Site
44.Lot Improvemen
45.Subdivision Lo
46.Heavy Ind Sit

Washburn

Map Lot 008-030B | Account 650 | Location 2168 WASHBURN ROAD | Card 1 Of 1 | 8/23/2023

Building Style **0**		
1.Conv.	5.Garrison	9.Gambrel
2.Ranch	6.Salt Box	10.Other
3.R Ranch	7.Contemp	11.Split
4.Cape	8.Log	12.
Dwelling Units **0**		
Other Units **0**		
Stories **0**		
1.1	4.1.5	7.
2.2	5.1.75	8.
3.3	6.2.5	9.
Exterior Walls **0**		
1.Wood	5.Stucco	9.T-111
2.Vin/Al	6.Brick	10.Other
3.Compos.	7.Stone	11.
4.Asbestos	8.Concrete	12.
Roof Surface **0**		
1.Asphalt	4.Composit	7.
2.Slate	5.Wood	8.
3.Metal	6.Other	9.
SF Masonry Trim **0**		
OPEN-3-CUSTOM **0**		
OPEN-4-CUSTOM **0**		
Year Built **0**		
Year Remodeled **0**		
Foundation **0**		
1.Concrete	4.Wood	7.
2.C Block	5.Slab	8.
3.Br/Stone	6.Piers	9.
Basement **0**		
1.1/4 Bmt	4.Full Bmt	7.
2.1/2 Bmt	5.None	8.
3.3/4 Bmt	6.	9.None
Bsmt Gar # Cars **0**		
Wet Basement **0**		
1.Dry	4.	7.
2.Damp	5.	8.
3.Wet	6.	9.

SF Bsmt Living **0**		
Fin Bsmt Grade **0 0**		
OPEN 5 OPTIONAL **0**		
Heat Type **100%** **0**		
1.HWBB	5.FWA	9.No Heat
2.HWCI	6.GravWA	10.
3.H Pump	7.Electric	11.
4.Steam	8.Fl/Wall	12.
Cool Type **0%** **9 None**		
1.Refrig	4.W&C Air	7.
2.Evapor	5.	8.
3.H Pump	6.	9.None
Kitchen Style **0**		
1.Modern	4.Obsolete	7.
2.Typical	5.	8.
3.Old Type	6.	9.None
Bath(s) Style **0**		
1.Modern	4.Obsolete	7.
2.Typical	5.	8.
3.Old Type	6.	9.None
# Rooms **0**		
# Bedrooms **0**		
# Full Baths **0**		
# Half Baths **0**		
# Addn Fixtures **0**		
# Fireplaces **0**		

TRIO Software
A Division of Harris Computer Systems

Layout **0**		
1.Typical	4.	7.
2.Inadeq	5.	8.
3.Poor	6.	9.
Attic **0**		
1.1/4 Fin	4.Full Fin	7.
2.1/2 Fin	5.Fl/Stair	8.
3.3/4 Fin	6.	9.None
Insulation **0**		
1.Full	4.Minimal	7.
2.Heavy	5.Partial	8.
3.Capped	6.	9.None
Unfinished % **0%**		
Grade & Factor **0 0%**		
1.E Grade	4.B Grade	7.
2.D Grade	5.A Grade	8.SC Grade
3.C Grade	6.AA Grade	9.Same
SQFT (Footprint) **0**		
Condition **0**		
1.Poor	4.Avg	7.V G
2.Fair	5.Avg+	8.Exc
3.Avg-	6.Good	9.Same
Phys. % Good **0%**		
Funct. % Good **100%**		
Functional Code **9 None**		
1.Incomp	4.Delap	7.No Power
2.O-Built	5.Bsmt	8.LongTerm
3.Damage	6.Common	9.None
Econ. % Good **100%**		
Economic Code **None**		
0.None	3.No Power	7.
1.Location	4.Generate	8.
2.Encroach	9.None	9.
Entrance Code **3 Information Only**		
1.Interior	4.Vacant	7.
2.Refusal	5.Estimate	8.
3.Informed	6.Reviewed	9.
Information Code **2 Relative**		
1.Owner	4.Agent	7.
2.Relative	5.Estimate	8.
3.Tenant	6.Other	9.

Date Inspected 10/19/2018

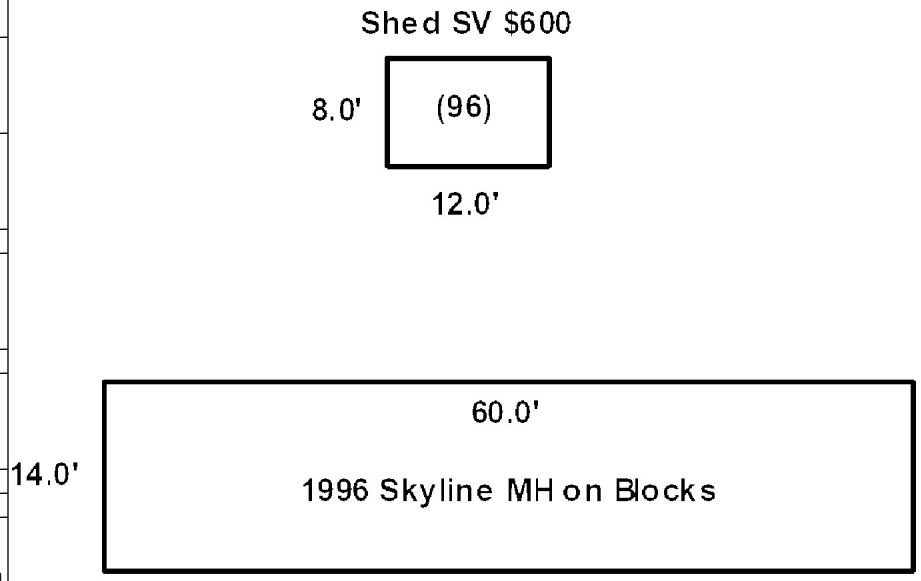

Additions, Outbuildings & Improvements

Type	Year	Units	Grade	Cond	Phys.	Funct.	Sound Value
942 Skyline M/H	1996	14x60	5 100	3	0 %	100 %	
24 Frame Shed	0				%	%	600
					%	%	
					%	%	
					%	%	
					%	%	
					%	%	
					%	%	
					%	%	
					%	%	

1.One Story Fram
2.Two Story Fram
3.Three Story Fr
4.1 & 1/2 Story
5.1 & 3/4 Story
6.2 & 1/2 Story
21.Open Frame Por
22.Encl Frame Por
23.Frame Garage
24.Frame Shed
25.Frame Bay Wind
26.1SFr Overhang
27.Unfin Basement
28.Unfinished Att
29.Finished Attic

Map Lot 008-031 | Account 150 | Location Washburn Road | Card 1 Of 1 | 8/23/2023

LEBLANC, WILLIAM
LEBLANC, ALEXANDRIA
P.O. Box 360
Washburn ME 04786

B6176P120

Previous Owner
ROGER CONNOLLY TRUSTEE
OF STOCKHOLM REALTY TRUST
PO BOX 130
CARIBOU ME 04736
Sale Date: 6/03/2021

Previous Owner
Borden, Matthew
452 Fuller Road

Hermon ME 04401 0406
Sale Date: 7/17/2017

Inspection Witnessed By:

X Date

No./Date	Description	Date Insp.

Notes:
Check 2022 small cabin 24x24 with comport toilet

*5-8-2019 Bk 5773 Pg 66 split out 59 acres to Hadley Clayton which created a new account. There are now 58 acres assessed on account 150. -50% off baselot for access.

Washburn

Property Data

Neighborhood **1 Neighborhood One**

Tree Growth Year **0**

1ST MORTGAGE **0**

2ND MORTGAGE **0**

Zone/Land Use **1 Residential**

Secondary Zone

Topography **2 Rolling**

1.Level	4.Below St	7.LevelBog
2.Rolling	5.Low	8.
3.Above St	6.Swampy	9.

Utilities **4 Drilled Well** **6 Septic System**

1.Public	4.Dr Well	7.Cesspool
2.Water	5.Dug Well	8.
3.Sewer	6.Septic	9.None

Street **1 Paved**

1.Paved	4.Proposed	7.
2.Semi Imp	5.R/O/W	8.
3.Gravel	6.	9.None

TG PLAN YEAR **0**

Tif District # **0**

Sale Data

Sale Date **6/03/2021**

Price **69,900**

Sale Type **1 Land Only**

1.Land	4.Mobile	7.C/I L&B
2.L & B	5.Other	8.
3.Building	6.C/I Land	9.

Financing **9 Unknown**

1.Convent	4.Seller	7.
2.FHA/VA	5.Private	8.
3.Assumed	6.Cash	9.Unknown

Validity **1 Arms Length Sale**

1.Valid	4.Split	7.Renovate
2.Related	5.Partial	8.Other
3.Distress	6.Exempt	9.

Verified **8 Other Source**

1.Buyer	4.Agent	7.Family
2.Seller	5.Pub Rec	8.Other
3.Lender	6.MLS	9.

Assessment Record

Year	Land	Buildings	Exempt	Total
2012	35,500	0	0	35,500
2013	46,200	0	0	46,200
2015	46,200	0	0	46,200
2018	46,200	0	0	46,200
2019	32,000	0	0	32,000
2020	32,000	0	0	32,000
2021	32,000	0	0	32,000
2022	35,800	26,000	0	61,800
2023	43,100	2,500	0	45,600

Land Data

Front Foot	Type	Effective Frontage	Effective Depth	Influence Factor	Influence Code
11.Regular Lot				%	
12.Delta Triangle				%	
13.Nabla Triangle				%	
14.Rear Land				%	
15.Class I Road				%	
				%	
				%	
Square Foot		**Square Feet**			
16.Class II Road				%	
17.Municipal Rese				%	
18.Munic Sep Lago				%	
19.Gravel Pit				%	
20.Industrial Bas				%	
				%	
				%	
Fract. Acre		**Acreage/Sites**			
21.Developed Pave	23	1.00	50	%	5
22.Undev Paved (F	28	57.00	100	%	0
23.Developed Grav				%	
Acres				%	
24.Undev Gravel (				%	
25.Comm Base Pave				%	
26.Comm Base Grav				%	
27.Backlot				%	
28.Rear Land				%	
29.Pavement				%	

Total Acreage 58.00

Influence Codes

1.Unimproved
2.Excess Frtg
3.Topography
4.Size/Shape
5.Access
6.Restriction
7.Open Space
8.View/Environ
9.Fract Share
Acres
30.Utility R O W
31.Tillable
32.Pasture
33.Orchard
34.Softwood F&O
35.Mixed Wood F&O
36.Hardwood F&O
37.Softwood TG
38.Mixed Wood TG
39.Hardwood TG
40.Wasteland
41.Open Space
42.Mobile Home Si
43.Condo Site
44.Lot Improvemen
45.Subdivision Lo
46.Heavy Ind Sit

Washburn

Map Lot 008-031 | Account 150 | Location Washburn Road | Card 1 Of 1 | 8/23/2023

Building Style **0**		
1.Conv.	5.Garrison	9.Gambrel
2.Ranch	6.Salt Box	10.Other
3.R Ranch	7.Contemp	11.Split
4.Cape	8.Log	12.
Dwelling Units **0**		
Other Units **0**		
Stories **0**		
1.1	4.1.5	7.
2.2	5.1.75	8.
3.3	6.2.5	9.
Exterior Walls **0**		
1.Wood	5.Stucco	9.T-111
2.Vin/Al	6.Brick	10.Other
3.Compos.	7.Stone	11.
4.Asbestos	8.Concrete	12.
Roof Surface **0**		
1.Asphalt	4.Composit	7.
2.Slate	5.Wood	8.
3.Metal	6.Other	9.
SF Masonry Trim **0**		
OPEN-3-CUSTOM **0**		
OPEN-4-CUSTOM **0**		
Year Built **0**		
Year Remodeled **0**		
Foundation **0**		
1.Concrete	4.Wood	7.
2.C Block	5.Slab	8.
3.Br/Stone	6.Piers	9.
Basement **0**		
1.1/4 Bmt	4.Full Bmt	7.
2.1/2 Bmt	5.None	8.
3.3/4 Bmt	6.	9.None
Bsmt Gar # Cars **0**		
Wet Basement **0**		
1.Dry	4.	7.
2.Damp	5.	8.
3.Wet	6.	9.

SF Bsmt Living **0**		
Fin Bsmt Grade **0 0**		
OPEN 5 OPTIONAL **0**		
Heat Type **100%** **0**		
1.HWBB	5.FWA	9.No Heat
2.HWCI	6.GravWA	10.
3.H Pump	7.Electric	11.
4.Steam	8.Fl/Wall	12.
Cool Type **0%** **9 None**		
1.Refrig	4.W&C Air	7.
2.Evapor	5.	8.
3.H Pump	6.	9.None
Kitchen Style **0**		
1.Modern	4.Obsolete	7.
2.Typical	5.	8.
3.Old Type	6.	9.None
Bath(s) Style **0**		
1.Modern	4.Obsolete	7.
2.Typical	5.	8.
3.Old Type	6.	9.None
# Rooms **0**		
# Bedrooms **0**		
# Full Baths **0**		
# Half Baths **0**		
# Addn Fixtures **0**		
# Fireplaces **0**		

TRIO Software
A Division of Harris Computer Systems

Layout **0**		
1.Typical	4.	7.
2.Inadeq	5.	8.
3.Poor	6.	9.
Attic **0**		
1.1/4 Fin	4.Full Fin	7.
2.1/2 Fin	5.Fl/Stair	8.
3.3/4 Fin	6.	9.None
Insulation **0**		
1.Full	4.Minimal	7.
2.Heavy	5.Partial	8.
3.Capped	6.	9.None
Unfinished % **0%**		
Grade & Factor **0 0%**		
1.E Grade	4.B Grade	7.
2.D Grade	5.A Grade	8.SC Grade
3.C Grade	6.AA Grade	9.Same
SQFT (Footprint) **0**		
Condition **0**		
1.Poor	4.Avg	7.V G
2.Fair	5.Avg+	8.Exc
3.Avg-	6.Good	9.Same
Phys. % Good **0%**		
Funct. % Good **100%**		
Functional Code **9 None**		
1.Incomp	4.Delap	7.No Power
2.O-Built	5.Bsmt	8.LongTerm
3.Damage	6.Common	9.None
Econ. % Good **100%**		
Economic Code **None**		
0.None	3.No Power	7.
1.Location	4.Generate	8.
2.Encroach	9.None	9.
Entrance Code **3 Information Only**		
1.Interior	4.Vacant	7.
2.Refusal	5.Estimate	8.
3.Informed	6.Reviewed	9.
Information Code **1 Owner**		
1.Owner	4.Agent	7.
2.Relative	5.Estimate	8.
3.Tenant	6.Other	9.

28'

1S-Log/NB

(784)

28'

Date Inspected 5/13/2022

Additions, Outbuildings & Improvements

Type	Year	Units	Grade	Cond	Phys.	Funct.	Sound Value
1 One Story Frame	2022				%	%	2,500
					%	%	
					%	%	
					%	%	
					%	%	
					%	%	
					%	%	
					%	%	
					%	%	
					%	%	

1.One Story Fram
2.Two Story Fram
3.Three Story Fr
4.1 & 1/2 Story
5.1 & 3/4 Story
6.2 & 1/2 Story
21.Open Frame Por
22.Encl Frame Por
23.Frame Garage
24.Frame Shed
25.Frame Bay Wind
26.1SFr Overhang
27.Unfin Basement
28.Unfinished Att
29.Finished Attic

Map Lot 008-031A | Account 967 | Location 14 BORDEN ROAD | Card 1 Of 1 | 8/23/2023

Hadley, Clayton
HADLEY, LINDA C
P.O. Box 14
Washburn ME 04786

B5773P66 B6318P286

Previous Owner
Washburn Water & Sewer District
1259A Main Street

Washburn ME
Sale Date: 5/15/2018

Inspection Witnessed By:

X Date

No./Date	Description	Date Insp.

Notes:

*** Building adds for 2022 added to Leblancs in error. EPS and animal shed added to this parcel for 04/01/2023
** Contact owner before entering property to look at barn per request. Has old horses that are very skidish and prefers being there for safety.
* Added dwelling and barn to property for 2020. Baselot assessed at 100%. Homestead applied to property.
*5-8-2019 Bk 5773 Pg 66 split 59 acres to Hadley Clayton. Account 967 is now known at map 8 lot 31A. -50% off baselot

Washburn

Property Data

Neighborhood **1 Neighborhood One**

Tree Growth Year **0**

1ST MORTGAGE **0**

2ND MORTGAGE **0**

Zone/Land Use **1 Residential**

Secondary Zone

Topography **2 Rolling**

1.Level	4.Below St	7.LevelBog
2.Rolling	5.Low	8.
3.Above St	6.Swampy	9.

Utilities

1.Public	4.Dr Well	7.Cesspool
2.Water	5.Dug Well	8.
3.Sewer	6.Septic	9.None

Street **1 Paved**

1.Paved	4.Proposed	7.
2.Semi Imp	5.R/O/W	8.
3.Gravel	6.	9.None

TG PLAN YEAR **0**

Tif District # **0**

Sale Data

Sale Date **5/15/2018**

Price **34,500**

Sale Type **1 Land Only**

1.Land	4.Mobile	7.C/I L&B
2.L & B	5.Other	8.
3.Building	6.C/I Land	9.

Financing **9 Unknown**

1.Convent	4.Seller	7.
2.FHA/VA	5.Private	8.
3.Assumed	6.Cash	9.Unknown

Validity **1 Arms Length Sale**

1.Valid	4.Split	7.Renovate
2.Related	5.Partial	8.Other
3.Distress	6.Exempt	9.

Verified **5 Public Record**

1.Buyer	4.Agent	7.Family
2.Seller	5.Pub Rec	8.Other
3.Lender	6.MLS	9.

Assessment Record

Year	Land	Buildings	Exempt	Total
2012	0	60,000	60,000	0
2013	0	60,000	60,000	0
2015	0	60,000	60,000	0
2018	0	60,000	60,000	0
2019	32,500	0	0	32,500
2020	36,000	17,200	25,000	28,200
2021	36,000	17,600	25,000	28,600
2022	36,000	18,500	25,000	29,500
2023	42,600	36,400	25,000	54,000

Land Data

Front Foot	Type	Effective Frontage	Effective Depth	Influence Factor	Influence Code
11.Regular Lot				%	
12.Delta Triangle				%	
13.Nabla Triangle				%	
14.Rear Land				%	
15.Class I Road				%	
				%	
				%	
Square Foot		**Square Feet**			
16.Class II Road				%	
17.Municipal Rese				%	
18.Munic Sep Lago				%	
19.Gravel Pit				%	
20.Industrial Bas				%	
				%	
				%	
Fract. Acre		**Acreage/Sites**			
21.Developed Pave	24	1.00	100	%	0
22.Undev Paved (F	28	58.00	100	%	0
23.Developed Grav				%	
Acres				%	
24.Undev Gravel (				%	
25.Comm Base Pave				%	
26.Comm Base Grav				%	
27.Backlot				%	
28.Rear Land				%	
29.Pavement				%	

Total Acreage 59.00

Influence Codes

1.Unimproved
2.Excess Frtg
3.Topography
4.Size/Shape
5.Access
6.Restriction
7.Open Space
8.View/Environ
9.Fract Share
Acres
30.Utility R O W
31.Tillable
32.Pasture
33.Orchard
34.Softwood F&O
35.Mixed Wood F&O
36.Hardwood F&O
37.Softwood TG
38.Mixed Wood TG
39.Hardwood TG
40.Wasteland
41.Open Space
42.Mobile Home Si
43.Condo Site
44.Lot Improvemen
45.Subdivision Lo
46.Heavy Ind Sit

Washburn

Map Lot 008-031A | Account 967 | Location 14 BORDEN ROAD | Card 1 Of 1 | 8/23/2023

Building Style **0**		
1.Conv.	5.Garrison	9.Gambrel
2.Ranch	6.Salt Box	10.Other
3.R Ranch	7.Contemp	11.Split
4.Cape	8.Log	12.
Dwelling Units **0**		
Other Units **0**		
Stories **0**		
1.1	4.1.5	7.
2.2	5.1.75	8.
3.3	6.2.5	9.
Exterior Walls **0**		
1.Wood	5.Stucco	9.T-111
2.Vin/Al	6.Brick	10.Other
3.Compos.	7.Stone	11.
4.Asbestos	8.Concrete	12.
Roof Surface **0**		
1.Asphalt	4.Composit	7.
2.Slate	5.Wood	8.
3.Metal	6.Other	9.
SF Masonry Trim **0**		
OPEN-3-CUSTOM **0**		
OPEN-4-CUSTOM **0**		
Year Built **0**		
Year Remodeled **0**		
Foundation **0**		
1.Concrete	4.Wood	7.
2.C Block	5.Slab	8.
3.Br/Stone	6.Piers	9.
Basement **0**		
1.1/4 Bmt	4.Full Bmt	7.
2.1/2 Bmt	5.None	8.
3.3/4 Bmt	6.	9.None
Bsmt Gar # Cars **0**		
Wet Basement **0**		
1.Dry	4.	7.
2.Damp	5.	8.
3.Wet	6.	9.

SF Bsmt Living **0**		
Fin Bsmt Grade **0 0**		
OPEN 5 OPTIONAL **0**		
Heat Type **100%** **0**		
1.HWBB	5.FWA	9.No Heat
2.HWCI	6.GravWA	10.
3.H Pump	7.Electric	11.
4.Steam	8.Fl/Wall	12.
Cool Type **0%** **9 None**		
1.Refrig	4.W&C Air	7.
2.Evapor	5.	8.
3.H Pump	6.	9.None
Kitchen Style **0**		
1.Modern	4.Obsolete	7.
2.Typical	5.	8.
3.Old Type	6.	9.None
Bath(s) Style **0**		
1.Modern	4.Obsolete	7.
2.Typical	5.	8.
3.Old Type	6.	9.None
# Rooms **0**		
# Bedrooms **0**		
# Full Baths **0**		
# Half Baths **0**		
# Addn Fixtures **0**		
# Fireplaces **0**		

TRIO Software
A Division of Harris Computer Systems

Layout **0**		
1.Typical	4.	7.
2.Inadeq	5.	8.
3.Poor	6.	9.
Attic **0**		
1.1/4 Fin	4.Full Fin	7.
2.1/2 Fin	5.Fl/Stair	8.
3.3/4 Fin	6.	9.None
Insulation **0**		
1.Full	4.Minimal	7.
2.Heavy	5.Partial	8.
3.Capped	6.	9.None
Unfinished % **0%**		
Grade & Factor **0 0%**		
1.E Grade	4.B Grade	7.
2.D Grade	5.A Grade	8.SC Grade
3.C Grade	6.AA Grade	9.Same
SQFT (Footprint) **0**		
Condition **0**		
1.Poor	4.Avg	7.V G
2.Fair	5.Avg+	8.Exc
3.Avg-	6.Good	9.Same
Phys. % Good **0%**		
Funct. % Good **100%**		
Functional Code **9 None**		
1.Incomp	4.Delap	7.No Power
2.O-Built	5.Bsmt	8.LongTerm
3.Damage	6.Common	9.None
Econ. % Good **100%**		
Economic Code **None**		
0.None	3.No Power	7.
1.Location	4.Generate	8.
2.Encroach	9.None	9.
Entrance Code **3 Information Only**		
1.Interior	4.Vacant	7.
2.Refusal	5.Estimate	8.
3.Informed	6.Reviewed	9.
Information Code **1 Owner**		
1.Owner	4.Agent	7.
2.Relative	5.Estimate	8.
3.Tenant	6.Other	9.

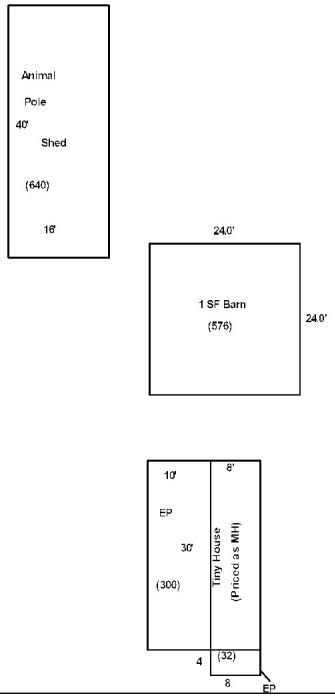

Date Inspected 7/01/2020

Additions, Outbuildings & Improvements

Type	Year	Units	Grade	Cond	Phys.	Funct.	Sound Value
995 8Mobile Home	2018	8x32	4 100	4	0 %	100 %	
115 1.5 Story Barn	2019	576	2 100	3	0 %	100 %	
22 Encl Frame Porch	2000	300	2 100	2	0 %	100 %	
24 Frame Shed	2021	640	2 100	2	0 %	100 %	
					%	%	
					%	%	
					%	%	
					%	%	
					%	%	
					%	%	

1.One Story Fram
2.Two Story Fram
3.Three Story Fr
4.1 & 1/2 Story
5.1 & 3/4 Story
6.2 & 1/2 Story
21.Open Frame Por
22.Encl Frame Por
23.Frame Garage
24.Frame Shed
25.Frame Bay Wind
26.1SFr Overhang
27.Unfin Basement
28.Unfinished Att
29.Finished Attic