Map Lot 007-022 Account 195 Location 354 EVERETT ROAD Card 1 Of 1 8/23/2023

CHURCHILL, DAREN S
CHURCHILL, LAURA L (BARTHLOW)
PO BOX 215
WASHBURN ME 04786

B2490P114 B4612P1 B5105P100 B5105P102

Property Data

Neighborhood **1 Neighborhood One**

Tree Growth Year **0**

1ST MORTGAGE **0**

2ND MORTGAGE **0**

Zone/Land Use **1 Residential**

Secondary Zone

Topography **2 Rolling**

1.Level	4.Below St	7.LevelBog
2.Rolling	5.Low	8.
3.Above St	6.Swampy	9.

Utilities **4 Drilled Well** **6 Septic System**

1.Public	4.Dr Well	7.Cesspool
2.Water	5.Dug Well	8.
3.Sewer	6.Septic	9.None

Street **1 Paved**

1.Paved	4.Proposed	7.
2.Semi Imp	5.R/O/W	8.
3.Gravel	6.	9.None

TG PLAN YEAR **0**

Tif District # **0**

Sale Data

Sale Date **8/18/1992**

Price **68,000**

Sale Type **2 Land & Buildings**

1.Land	4.Mobile	7.C/I L&B
2.L & B	5.Other	8.
3.Building	6.C/I Land	9.

Financing **1 Conventional**

1.Convent	4.Seller	7.
2.FHA/VA	5.Private	8.
3.Assumed	6.Cash	9.Unknown

Validity **1 Arms Length Sale**

1.Valid	4.Split	7.Renovate
2.Related	5.Partial	8.Other
3.Distress	6.Exempt	9.

Verified **5 Public Record**

1.Buyer	4.Agent	7.Family
2.Seller	5.Pub Rec	8.Other
3.Lender	6.MLS	9.

Assessment Record

Year	Land	Buildings	Exempt	Total
2012	8,500	104,700	8,800	104,400
2013	11,100	104,700	8,800	107,000
2015	11,100	104,700	9,000	106,800
2018	11,100	104,700	18,400	97,400
2019	24,800	115,000	20,000	119,800
2020	24,800	113,900	25,000	113,700
2021	24,800	115,000	25,000	114,800
2022	24,800	120,700	25,000	120,500
2023	30,600	143,500	25,000	149,100

Land Data

Front Foot	Type	Effective Frontage	Effective Depth	Influence Factor	Influence Code
11.Regular Lot				%	
12.Delta Triangle				%	
13.Nabla Triangle				%	
14.Rear Land				%	
15.Class I Road				%	
				%	
				%	
Square Foot		**Square Feet**			
16.Class II Road	29	2,500		100 %	0
17.Municipal Rese				%	
18.Munic Sep Lago				%	
19.Gravel Pit				%	
20.Industrial Bas				%	
				%	
				%	
Fract. Acre		**Acreage/Sites**			
21.Developed Pave	21	1.00		100 %	0
22.Undev Paved (F	28	4.00		100 %	0
23.Developed Grav				%	
Acres				%	
24.Undev Gravel (				%	
25.Comm Base Pave				%	
26.Comm Base Grav				%	
27.Backlot				%	
28.Rear Land				%	
29.Pavement				%	

Total Acreage 5.00

Influence Codes

1.Unimproved
2.Excess Frtg
3.Topography
4.Size/Shape
5.Access
6.Restriction
7.Open Space
8.View/Environ
9.Fract Share

Acres

30.Utility R O W
31.Tillable
32.Pasture
33.Orchard
34.Softwood F&O
35.Mixed Wood F&O
36.Hardwood F&O
37.Softwood TG
38.Mixed Wood TG
39.Hardwood TG
40.Wasteland
41.Open Space
42.Mobile Home Si
43.Condo Site
44.Lot Improvemen
45.Subdivision Lo
46.Heavy Ind Sit

Inspection Witnessed By:

X Date

No./Date	Description	Date Insp.

Notes:
*5-8-2019 -10% for attached garage

Washburn

Washburn

Map Lot 007-022 | Account 195 | Location 354 EVERETT ROAD | Card 1 Of 1 | 8/23/2023

Building Style	**4 Cape Cod**		
1.Conv.	5.Garrison	9.Gambrel	
2.Ranch	6.Salt Box	10.Other	
3.R Ranch	7.Contemp	11.Split	
4.Cape	8.Log	12.	
Dwelling Units	**1**		
Other Units	**0**		
Stories	**4 One & 1/2 Story**		
1.1	4.1.5	7.	
2.2	5.1.75	8.	
3.3	6.2.5	9.	
Exterior Walls	**2 Vinyl/Aluminum**		
1.Wood	5.Stucco	9.T-111	
2.Vin/Al	6.Brick	10.Other	
3.Compos.	7.Stone	11.	
4.Asbestos	8.Concrete	12.	
Roof Surface	**3 Sheet Metal**		
1.Asphalt	4.Composit	7.	
2.Slate	5.Wood	8.	
3.Metal	6.Other	9.	
SF Masonry Trim	**0**		
OPEN-3-CUSTOM	**0**		
OPEN-4-CUSTOM	**0**		
Year Built	**1965**		
Year Remodeled	**0**		
Foundation	**1 Concrete**		
1.Concrete	4.Wood	7.	
2.C Block	5.Slab	8.	
3.Br/Stone	6.Piers	9.	
Basement	**4 Full Basement**		
1.1/4 Bmt	4.Full Bmt	7.	
2.1/2 Bmt	5.None	8.	
3.3/4 Bmt	6.	9.None	
Bsmt Gar # Cars	**0**		
Wet Basement	**1 Dry Basement**		
1.Dry	4.	7.	
2.Damp	5.	8.	
3.Wet	6.	9.	

SF Bsmt Living	**0**		
Fin Bsmt Grade	**0 0**		
OPEN 5 OPTIONAL	**0**		
Heat Type	**100%**	**1 Hot Water BB**	
1.HWBB	5.FWA	9.No Heat	
2.HWCI	6.GravWA	10.	
3.H Pump	7.Electric	11.	
4.Steam	8.Fl/Wall	12.	
Cool Type	**50%**	**3 Heat Pump**	
1.Refrig	4.W&C Air	7.	
2.Evapor	5.	8.	
3.H Pump	6.	9.None	
Kitchen Style	**2 Typical**		
1.Modern	4.Obsolete	7.	
2.Typical	5.	8.	
3.Old Type	6.	9.None	
Bath(s) Style	**2 Typical Bath(s)**		
1.Modern	4.Obsolete	7.	
2.Typical	5.	8.	
3.Old Type	6.	9.None	
# Rooms	**7**		
# Bedrooms	**3**		
# Full Baths	**2**		
# Half Baths	**0**		
# Addn Fixtures	**0**		
# Fireplaces	**0**		

TRIO Software
A Division of Harris Computer Systems

Layout	**1 Typical**		
1.Typical	4.	7.	
2.Inadeq	5.	8.	
3.Poor	6.	9.	
Attic	**9 None**		
1.1/4 Fin	4.Full Fin	7.	
2.1/2 Fin	5.Fl/Stair	8.	
3.3/4 Fin	6.	9.None	
Insulation	**1 Full**		
1.Full	4.Minimal	7.	
2.Heavy	5.Partial	8.	
3.Capped	6.	9.None	
Unfinished %	**0%**		
Grade & Factor	**3 Average 100%**		
1.E Grade	4.B Grade	7.	
2.D Grade	5.A Grade	8.SC Grade	
3.C Grade	6.AA Grade	9.Same	
SQFT (Footprint)	**900**		
Condition	**6 Good**		
1.Poor	4.Avg	7.V G	
2.Fair	5.Avg+	8.Exc	
3.Avg-	6.Good	9.Same	
Phys. % Good	**0%**		
Funct. % Good	**100%**		
Functional Code	**9 None**		
1.Incomp	4.Delap	7.No Power	
2.O-Built	5.Bsmt	8.LongTerm	
3.Damage	6.Common	9.None	
Econ. % Good	**100%**		
Economic Code	**None**		
0.None	3.No Power	7.	
1.Location	4.Generate	8.	
2.Encroach	9.None	9.	
Entrance Code	**1 Interior Inspect**		
1.Interior	4.Vacant	7.	
2.Refusal	5.Estimate	8.	
3.Informed	6.Reviewed	9.	
Information Code	**1 Owner**		
1.Owner	4.Agent	7.	
2.Relative	5.Estimate	8.	
3.Tenant	6.Other	9.	

Date Inspected 10/17/2018

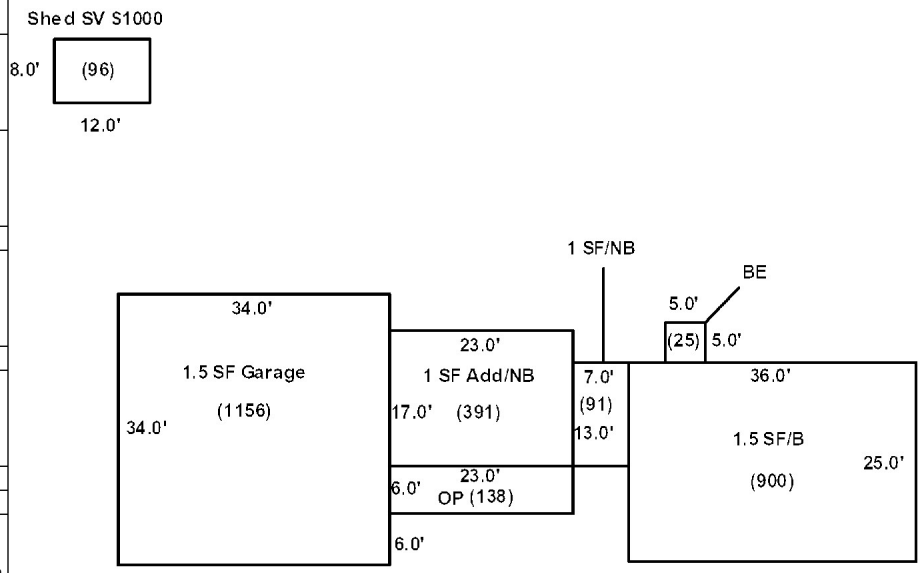

Additions, Outbuildings & Improvements

Type	Year	Units	Grade	Cond	Phys.	Funct.	Sound Value
40 Basement Entry	1965	25	9 100	9	0 %	100 %	
1 One Story Frame	1965	91	9 100	9	0 %	100 %	
1 One Story Frame	2009	391	3 100	4	0 %	100 %	
21 Open Frame	2009	138	3 95	4	0 %	100 %	
82 1.5 S-Gar	2008	1156	3 100	4	0 %	90 %	
24 Frame Shed	0				%	%	1,000
					%	%	
					%	%	
					%	%	
					%	%	

1.One Story Fram
2.Two Story Fram
3.Three Story Fr
4.1 & 1/2 Story
5.1 & 3/4 Story
6.2 & 1/2 Story
21.Open Frame Por
22.Encl Frame Por
23.Frame Garage
24.Frame Shed
25.Frame Bay Wind
26.1SFr Overhang
27.Unfin Basement
28.Unfinished Att
29.Finished Attic

Map Lot 007-023 Account 896 Location EVERETT ROAD Card 1 Of 1 8/23/2023

JBBC, INC
19 Lakeside Lane
Eagle Lake ME 04739

B6337P227

Previous Owner
THERIAULT, DUANE J
100 DAIGLE CROSS ROAD

ST. AGATHA ME 04772
Sale Date: 7/01/2022

Inspection Witnessed By:

X Date

No./Date	Description	Date Insp.

Notes:

* Gravel Pit Started. Sale $300,000; Utilized 5 acres for 04/01/2023 and need plan referenced in deed to split the property

Washburn

Property Data

Neighborhood	**1 Neighborhood One**
Tree Growth Year	**0**
1ST MORTGAGE	**0**
2ND MORTGAGE	**0**
Zone/Land Use	**1 Residential**
Secondary Zone	
Topography	**1 Level**

1.Level	4.Below St	7.LevelBog
2.Rolling	5.Low	8.
3.Above St	6.Swampy	9.

Utilities

1.Public	4.Dr Well	7.Cesspool
2.Water	5.Dug Well	8.
3.Sewer	6.Septic	9.None

Street **1 Paved**

1.Paved	4.Proposed	7.
2.Semi Imp	5.R/O/W	8.
3.Gravel	6.	9.None

TG PLAN YEAR	**0**
Tif District #	**0**

Sale Data

Sale Date	**7/01/2022**
Price	**300,000**
Sale Type	**1 Land Only**

1.Land	4.Mobile	7.C/I L&B
2.L & B	5.Other	8.
3.Building	6.C/I Land	9.

Financing **1 Conventional**

1.Convent	4.Seller	7.
2.FHA/VA	5.Private	8.
3.Assumed	6.Cash	9.Unknown

Validity **1 Arms Length Sale**

1.Valid	4.Split	7.Renovate
2.Related	5.Partial	8.Other
3.Distress	6.Exempt	9.

Verified **5 Public Record**

1.Buyer	4.Agent	7.Family
2.Seller	5.Pub Rec	8.Other
3.Lender	6.MLS	9.

Assessment Record

Year	Land	Buildings	Exempt	Total
2012	28,300	0	0	28,300
2013	36,800	0	0	36,800
2015	36,800	0	0	36,800
2018	36,800	0	0	36,800
2019	73,900	0	0	73,900
2020	73,900	0	0	73,900
2021	73,900	0	0	73,900
2022	73,900	0	0	73,900
2023	105,700	0	0	105,700

Land Data

Front Foot	Type	Effective Frontage	Effective Depth	Influence Factor	Influence Code
11.Regular Lot				%	
12.Delta Triangle				%	
13.Nabla Triangle				%	
14.Rear Land				%	
15.Class I Road				%	
				%	
				%	
Square Foot		**Square Feet**			
16.Class II Road				%	
17.Municipal Rese				%	
18.Munic Sep Lago				%	
19.Gravel Pit				%	
20.Industrial Bas				%	
				%	
				%	
Fract. Acre		**Acreage/Sites**			
21.Developed Pave	22	1.00	100	%	0
22.Undev Paved (F	19	5.00	100	%	0
23.Developed Grav	28	34.00	100	%	0
Acres				%	
24.Undev Gravel (				%	
25.Comm Base Pave				%	
26.Comm Base Grav				%	
27.Backlot				%	
28.Rear Land					
29.Pavement					

Total Acreage 40.00

Influence Codes

1.Unimproved
2.Excess Frtg
3.Topography
4.Size/Shape
5.Access
6.Restriction
7.Open Space
8.View/Environ
9.Fract Share
Acres
30.Utility R O W
31.Tillable
32.Pasture
33.Orchard
34.Softwood F&O
35.Mixed Wood F&O
36.Hardwood F&O
37.Softwood TG
38.Mixed Wood TG
39.Hardwood TG
40.Wasteland
41.Open Space
42.Mobile Home Si
43.Condo Site
44.Lot Improvemen
45.Subdivision Lo
46.Heavy Ind Sit

Washburn

Map Lot 007-023 | Account 896 | Location EVERETT ROAD | Card 1 Of 1 | 8/23/2023

Building Style **0**		
1.Conv.	5.Garrison	9.Gambrel
2.Ranch	6.Salt Box	10.Other
3.R Ranch	7.Contemp	11.Split
4.Cape	8.Log	12.
Dwelling Units **0**		
Other Units **0**		
Stories **0**		
1.1	4.1.5	7.
2.2	5.1.75	8.
3.3	6.2.5	9.
Exterior Walls **0**		
1.Wood	5.Stucco	9.T-111
2.Vin/Al	6.Brick	10.Other
3.Compos.	7.Stone	11.
4.Asbestos	8.Concrete	12.
Roof Surface **0**		
1.Asphalt	4.Composit	7.
2.Slate	5.Wood	8.
3.Metal	6.Other	9.
SF Masonry Trim **0**		
OPEN-3-CUSTOM **0**		
OPEN-4-CUSTOM **0**		
Year Built **0**		
Year Remodeled **0**		
Foundation **0**		
1.Concrete	4.Wood	7.
2.C Block	5.Slab	8.
3.Br/Stone	6.Piers	9.
Basement **0**		
1.1/4 Bmt	4.Full Bmt	7.
2.1/2 Bmt	5.None	8.
3.3/4 Bmt	6.	9.None
Bsmt Gar # Cars **0**		
Wet Basement **0**		
1.Dry	4.	7.
2.Damp	5.	8.
3.Wet	6.	9.

SF Bsmt Living **0**		
Fin Bsmt Grade **0 0**		
OPEN 5 OPTIONAL **0**		
Heat Type **100%** **0**		
1.HWBB	5.FWA	9.No Heat
2.HWCI	6.GravWA	10.
3.H Pump	7.Electric	11.
4.Steam	8.Fl/Wall	12.
Cool Type **0%** **9 None**		
1.Refrig	4.W&C Air	7.
2.Evapor	5.	8.
3.H Pump	6.	9.None
Kitchen Style **0**		
1.Modern	4.Obsolete	7.
2.Typical	5.	8.
3.Old Type	6.	9.None
Bath(s) Style **0**		
1.Modern	4.Obsolete	7.
2.Typical	5.	8.
3.Old Type	6.	9.None
# Rooms **0**		
# Bedrooms **0**		
# Full Baths **0**		
# Half Baths **0**		
# Addn Fixtures **0**		
# Fireplaces **0**		

TRIO Software
A Division of Harris Computer Systems

Layout **0**		
1.Typical	4.	7.
2.Inadeq	5.	8.
3.Poor	6.	9.
Attic **0**		
1.1/4 Fin	4.Full Fin	7.
2.1/2 Fin	5.Fl/Stair	8.
3.3/4 Fin	6.	9.None
Insulation **0**		
1.Full	4.Minimal	7.
2.Heavy	5.Partial	8.
3.Capped	6.	9.None
Unfinished % **0%**		
Grade & Factor **0 0%**		
1.E Grade	4.B Grade	7.
2.D Grade	5.A Grade	8.SC Grade
3.C Grade	6.AA Grade	9.Same
SQFT (Footprint) **0**		
Condition **0**		
1.Poor	4.Avg	7.V G
2.Fair	5.Avg+	8.Exc
3.Avg-	6.Good	9.Same
Phys. % Good **0%**		
Funct. % Good **100%**		
Functional Code **9 None**		
1.Incomp	4.Delap	7.No Power
2.O-Built	5.Bsmt	8.LongTerm
3.Damage	6.Common	9.None
Econ. % Good **100%**		
Economic Code **None**		
0.None	3.No Power	7.
1.Location	4.Generate	8.
2.Encroach	9.None	9.
Entrance Code **0**		
1.Interior	4.Vacant	7.
2.Refusal	5.Estimate	8.
3.Informed	6.Reviewed	9.
Information Code **0**		
1.Owner	4.Agent	7.
2.Relative	5.Estimate	8.
3.Tenant	6.Other	9.

Date Inspected

Additions, Outbuildings & Improvements

Type	Year	Units	Grade	Cond	Phys.	Funct.	Sound Value
					%	%	
					%	%	
					%	%	
					%	%	
					%	%	
					%	%	
					%	%	
					%	%	
					%	%	
					%	%	

1.One Story Fram
2.Two Story Fram
3.Three Story Fr
4.1 & 1/2 Story
5.1 & 3/4 Story
6.2 & 1/2 Story
21.Open Frame Por
22.Encl Frame Por
23.Frame Garage
24.Frame Shed
25.Frame Bay Wind
26.1SFr Overhang
27.Unfin Basement
28.Unfinished Att
29.Finished Attic

Map Lot 007-023-1 Account 1155 Location EVERETT ROAD Card 1 Of 1 8/23/2023

WILL TURN FARMS, LLC
1232 MAIN STREET
WASHBURN ME 04786

B6396P225

Property Data

Neighborhood **1 Neighborhood One**

Tree Growth Year **0**

1ST MORTGAGE

2ND MORTGAGE

Zone/Land Use **1 Residential**

Secondary Zone

Topography **2 Rolling**

1.Level	4.Below St	7.LevelBog
2.Rolling	5.Low	8.
3.Above St	6.Swampy	9.

Utilities

1.Public	4.Dr Well	7.Cesspool
2.Water	5.Dug Well	8.
3.Sewer	6.Septic	9.None

Street **1 Paved**

1.Paved	4.Proposed	7.
2.Semi Imp	5.R/O/W	8.
3.Gravel	6.	9.None

TG PLAN YEAR **0**

Tif District # **0**

Sale Data

Sale Date

Price

Sale Type

1.Land	4.Mobile	7.C/I L&B
2.L & B	5.Other	8.
3.Building	6.C/I Land	9.

Financing

1.Convent	4.Seller	7.
2.FHA/VA	5.Private	8.
3.Assumed	6.Cash	9.Unknown

Validity

1.Valid	4.Split	7.Renovate
2.Related	5.Partial	8.Other
3.Distress	6.Exempt	9.

Verified

1.Buyer	4.Agent	7.Family
2.Seller	5.Pub Rec	8.Other
3.Lender	6.MLS	9.

Assessment Record

Year	Land	Buildings	Exempt	Total
2023	56,300	0	0	56,300

Land Data

Front Foot	Type	Effective Frontage	Effective Depth	Influence Factor	Influence Code
11.Regular Lot				%	
12.Delta Triangle				%	
13.Nabla Triangle				%	
14.Rear Land				%	
15.Class I Road				%	
				%	
				%	
Square Foot		**Square Feet**			
16.Class II Road				%	
17.Municipal Rese				%	
18.Munic Sep Lago				%	
19.Gravel Pit				%	
20.Industrial Bas				%	
				%	
				%	
Fract. Acre		**Acreage/Sites**			
21.Developed Pave	22	1.00	100	%	0
22.Undev Paved (F	28	3.00	100	%	0
23.Developed Grav	31	43.00	100	%	0
Acres	40	7.00	100	%	0
24.Undev Gravel (				%	
25.Comm Base Pave				%	
26.Comm Base Grav				%	
27.Backlot					
28.Rear Land					
29.Pavement					

Total Acreage 54.00

Influence Codes

1.Unimproved
2.Excess Frtg
3.Topography
4.Size/Shape
5.Access
6.Restriction
7.Open Space
8.View/Environ
9.Fract Share
Acres
30.Utility R O W
31.Tillable
32.Pasture
33.Orchard
34.Softwood F&O
35.Mixed Wood F&O
36.Hardwood F&O
37.Softwood TG
38.Mixed Wood TG
39.Hardwood TG
40.Wasteland
41.Open Space
42.Mobile Home Si
43.Condo Site
44.Lot Improvemen
45.Subdivision Lo
46.Heavy Ind Sit

Inspection Witnessed By:

X Date

No./Date	Description	Date Insp.

Notes:

* Need plan referenced in deed to map

Washburn

Washburn

Map Lot 007-023-1 | Account 1155 | Location EVERETT ROAD | Card 1 Of 1 | 8/23/2023

Building Style		
1.Conv.	5.Garrison	9.Gambrel
2.Ranch	6.Salt Box	10.Other
3.R Ranch	7.Contemp	11.Split
4.Cape	8.Log	12.

Dwelling Units

Other Units

Stories		
1.1	4.1.5	7.
2.2	5.1.75	8.
3.3	6.2.5	9.

Exterior Walls		
1.Wood	5.Stucco	9.T-111
2.Vin/Al	6.Brick	10.Other
3.Compos.	7.Stone	11.
4.Asbestos	8.Concrete	12.

Roof Surface		
1.Asphalt	4.Composit	7.
2.Slate	5.Wood	8.
3.Metal	6.Other	9.

SF Masonry Trim

OPEN-3-CUSTOM

OPEN-4-CUSTOM

Year Built

Year Remodeled

Foundation		
1.Concrete	4.Wood	7.
2.C Block	5.Slab	8.
3.Br/Stone	6.Piers	9.

Basement		
1.1/4 Bmt	4.Full Bmt	7.
2.1/2 Bmt	5.None	8.
3.3/4 Bmt	6.	9.None

Bsmt Gar # Cars

Wet Basement		
1.Dry	4.	7.
2.Damp	5.	8.
3.Wet	6.	9.

SF Bsmt Living

Fin Bsmt Grade

OPEN 5 OPTIONAL

Heat Type **100%**		
1.HWBB	5.FWA	9.No Heat
2.HWCI	6.GravWA	10.
3.H Pump	7.Electric	11.
4.Steam	8.Fl/Wall	12.

Cool Type **0%**		
1.Refrig	4.W&C Air	7.
2.Evapor	5.	8.
3.H Pump	6.	9.None

Kitchen Style		
1.Modern	4.Obsolete	7.
2.Typical	5.	8.
3.Old Type	6.	9.None

Bath(s) Style		
1.Modern	4.Obsolete	7.
2.Typical	5.	8.
3.Old Type	6.	9.None

Rooms

Bedrooms

Full Baths

Half Baths

Addn Fixtures

Fireplaces

TRIO Software
A Division of Harris Computer Systems

Layout		
1.Typical	4.	7.
2.Inadeq	5.	8.
3.Poor	6.	9.

Attic		
1.1/4 Fin	4.Full Fin	7.
2.1/2 Fin	5.Fl/Stair	8.
3.3/4 Fin	6.	9.None

Insulation		
1.Full	4.Minimal	7.
2.Heavy	5.Partial	8.
3.Capped	6.	9.None

Unfinished %

Grade & Factor		
1.E Grade	4.B Grade	7.
2.D Grade	5.A Grade	8.SC Grade
3.C Grade	6.AA Grade	9.Same

SQFT (Footprint)

Condition		
1.Poor	4.Avg	7.V G
2.Fair	5.Avg+	8.Exc
3.Avg-	6.Good	9.Same

Phys. % Good

Funct. % Good

Functional Code		
1.Incomp	4.Delap	7.No Power
2.O-Built	5.Bsmt	8.LongTerm
3.Damage	6.Common	9.None

Econ. % Good

Economic Code		
0.None	3.No Power	7.
1.Location	4.Generate	8.
2.Encroach	9.None	9.

Entrance Code **0**		
1.Interior	4.Vacant	7.
2.Refusal	5.Estimate	8.
3.Informed	6.Reviewed	9.

Information Code **0**		
1.Owner	4.Agent	7.
2.Relative	5.Estimate	8.
3.Tenant	6.Other	9.

Date Inspected

Additions, Outbuildings & Improvements

Type	Year	Units	Grade	Cond	Phys.	Funct.	Sound Value
					%	%	
					%	%	
					%	%	
					%	%	
					%	%	
					%	%	
					%	%	
					%	%	
					%	%	
					%	%	

1.One Story Fram
2.Two Story Fram
3.Three Story Fr
4.1 & 1/2 Story
5.1 & 3/4 Story
6.2 & 1/2 Story
21.Open Frame Por
22.Encl Frame Por
23.Frame Garage
24.Frame Shed
25.Frame Bay Wind
26.1SFr Overhang
27.Unfin Basement
28.Unfinished Att
29.Finished Attic

Map Lot 007-023A | Account 846 | Location EVERETT ROAD | Card 1 Of 1 | 8/23/2023

SODERBERG COMPANY, INC.
460 YORK STREET
CARIBOU ME 04736

B5616P304

Property Data

Neighborhood	**1 Neighborhood One**
Tree Growth Year	**0**
1ST MORTGAGE	**0**
2ND MORTGAGE	**0**
Zone/Land Use	**2 Commercial**
Secondary Zone	
Topography	**2 Rolling**

1.Level	4.Below St	7.LevelBog
2.Rolling	5.Low	8.
3.Above St	6.Swampy	9.

Utilities

1.Public	4.Dr Well	7.Cesspool
2.Water	5.Dug Well	8.
3.Sewer	6.Septic	9.None

Street

1.Paved	4.Proposed	7.
2.Semi Imp	5.R/O/W	8.
3.Gravel	6.	9.None

TG PLAN YEAR	**0**
Tif District #	**0**

Sale Data

Sale Date	**4/25/2002**
Price	**140,000**
Sale Type	**1 Land Only**

1.Land	4.Mobile	7.C/I L&B
2.L & B	5.Other	8.
3.Building	6.C/I Land	9.

Financing

1.Convent	4.Seller	7.
2.FHA/VA	5.Private	8.
3.Assumed	6.Cash	9.Unknown

Validity **1 Arms Length Sale**

1.Valid	4.Split	7.Renovate
2.Related	5.Partial	8.Other
3.Distress	6.Exempt	9.

Verified **5 Public Record**

1.Buyer	4.Agent	7.Family
2.Seller	5.Pub Rec	8.Other
3.Lender	6.MLS	9.

Assessment Record

Year	Land	Buildings	Exempt	Total
2012	21,000	0	0	21,000
2013	27,300	0	0	27,300
2015	27,300	0	0	27,300
2018	84,000	0	0	84,000
2019	244,500	0	0	244,500
2020	244,500	0	0	244,500
2021	244,500	0	0	244,500
2022	244,500	0	0	244,500
2023	447,700	0	0	447,700

Land Data

Front Foot	Type	Effective Frontage	Effective Depth	Influence Factor	Influence Code
11.Regular Lot				%	
12.Delta Triangle				%	
13.Nabla Triangle				%	
14.Rear Land				%	
15.Class I Road				%	
				%	
				%	
Square Foot		**Square Feet**			
16.Class II Road				%	
17.Municipal Rese				%	
18.Munic Sep Lago				%	
19.Gravel Pit				%	
20.Industrial Bas				%	
				%	
				%	
Fract. Acre		**Acreage/Sites**			
21.Developed Pave	25	1.00	100	%	0
22.Undev Paved (F	19	20.00	100	%	0
23.Developed Grav	31	44.00	100	%	0
Acres	28	115.00	100	%	0
24.Undev Gravel (				%	
25.Comm Base Pave				%	
26.Comm Base Grav				%	
27.Backlot					
28.Rear Land					
29.Pavement					

Total Acreage 180.00

Influence Codes

1.Unimproved
2.Excess Frtg
3.Topography
4.Size/Shape
5.Access
6.Restriction
7.Open Space
8.View/Environ
9.Fract Share
Acres
30.Utility R O W
31.Tillable
32.Pasture
33.Orchard
34.Softwood F&O
35.Mixed Wood F&O
36.Hardwood F&O
37.Softwood TG
38.Mixed Wood TG
39.Hardwood TG
40.Wasteland
41.Open Space
42.Mobile Home Si
43.Condo Site
44.Lot Improvemen
45.Subdivision Lo
46.Heavy Ind Sit

Inspection Witnessed By:

X Date

No./Date	Description	Date Insp.

Notes:

Review Gravel Pit Pricing per Recent Sales

*1-3-2019 Gravel pit scales at approximately 20 acres from Google Earth

Washburn

Washburn

Map Lot 007-023A | Account 846 | Location EVERETT ROAD | Card 1 Of 1 | 8/23/2023

Building Style **0**		
1.Conv.	5.Garrison	9.Gambrel
2.Ranch	6.Salt Box	10.Other
3.R Ranch	7.Contemp	11.Split
4.Cape	8.Log	12.
Dwelling Units **0**		
Other Units **0**		
Stories **0**		
1.1	4.1.5	7.
2.2	5.1.75	8.
3.3	6.2.5	9.
Exterior Walls **0**		
1.Wood	5.Stucco	9.T-111
2.Vin/Al	6.Brick	10.Other
3.Compos.	7.Stone	11.
4.Asbestos	8.Concrete	12.
Roof Surface **0**		
1.Asphalt	4.Composit	7.
2.Slate	5.Wood	8.
3.Metal	6.Other	9.
SF Masonry Trim **0**		
OPEN-3-CUSTOM **0**		
OPEN-4-CUSTOM **0**		
Year Built **0**		
Year Remodeled **0**		
Foundation **0**		
1.Concrete	4.Wood	7.
2.C Block	5.Slab	8.
3.Br/Stone	6.Piers	9.
Basement **0**		
1.1/4 Bmt	4.Full Bmt	7.
2.1/2 Bmt	5.None	8.
3.3/4 Bmt	6.	9.None
Bsmt Gar # Cars **0**		
Wet Basement **0**		
1.Dry	4.	7.
2.Damp	5.	8.
3.Wet	6.	9.

SF Bsmt Living **0**		
Fin Bsmt Grade **0 0**		
OPEN 5 OPTIONAL **0**		
Heat Type **100%** **0**		
1.HWBB	5.FWA	9.No Heat
2.HWCI	6.GravWA	10.
3.H Pump	7.Electric	11.
4.Steam	8.Fl/Wall	12.
Cool Type **0%** **9 None**		
1.Refrig	4.W&C Air	7.
2.Evapor	5.	8.
3.H Pump	6.	9.None
Kitchen Style **0**		
1.Modern	4.Obsolete	7.
2.Typical	5.	8.
3.Old Type	6.	9.None
Bath(s) Style **0**		
1.Modern	4.Obsolete	7.
2.Typical	5.	8.
3.Old Type	6.	9.None
# Rooms **0**		
# Bedrooms **0**		
# Full Baths **0**		
# Half Baths **0**		
# Addn Fixtures **0**		
# Fireplaces **0**		

TRIO Software
A Division of Harris Computer Systems

Layout **0**		
1.Typical	4.	7.
2.Inadeq	5.	8.
3.Poor	6.	9.
Attic **0**		
1.1/4 Fin	4.Full Fin	7.
2.1/2 Fin	5.Fl/Stair	8.
3.3/4 Fin	6.	9.None
Insulation **0**		
1.Full	4.Minimal	7.
2.Heavy	5.Partial	8.
3.Capped	6.	9.None
Unfinished % **0%**		
Grade & Factor **0 0%**		
1.E Grade	4.B Grade	7.
2.D Grade	5.A Grade	8.SC Grade
3.C Grade	6.AA Grade	9.Same
SQFT (Footprint) **0**		
Condition **0**		
1.Poor	4.Avg	7.V G
2.Fair	5.Avg+	8.Exc
3.Avg-	6.Good	9.Same
Phys. % Good **0%**		
Funct. % Good **100%**		
Functional Code **9 None**		
1.Incomp	4.Delap	7.No Power
2.O-Built	5.Bsmt	8.LongTerm
3.Damage	6.Common	9.None
Econ. % Good **100%**		
Economic Code **None**		
0.None	3.No Power	7.
1.Location	4.Generate	8.
2.Encroach	9.None	9.
Entrance Code **0**		
1.Interior	4.Vacant	7.
2.Refusal	5.Estimate	8.
3.Informed	6.Reviewed	9.
Information Code **0**		
1.Owner	4.Agent	7.
2.Relative	5.Estimate	8.
3.Tenant	6.Other	9.

Date Inspected

Additions, Outbuildings & Improvements

Type	Year	Units	Grade	Cond	Phys.	Funct.	Sound Value
					%	%	
					%	%	
					%	%	
					%	%	
					%	%	
					%	%	
					%	%	
					%	%	
					%	%	
					%	%	

1.One Story Fram
2.Two Story Fram
3.Three Story Fr
4.1 & 1/2 Story
5.1 & 3/4 Story
6.2 & 1/2 Story
21.Open Frame Por
22.Encl Frame Por
23.Frame Garage
24.Frame Shed
25.Frame Bay Wind
26.1SFr Overhang
27.Unfin Basement
28.Unfinished Att
29.Finished Attic

Map Lot 007-024 Account 529 Location 400 EVERETT ROAD Card 1 Of 1 8/23/2023

LEGER, STACEY
7 Charles Street
Caribou ME 04736

B4473P88 B4695P262

Previous Owner
Hyde, Sheldon S.
Hyde, Stacey A.
400 Everett Road
Washburn ME 04786
Sale Date: 5/05/2009

Inspection Witnessed By:

X Date

No./Date	Description	Date Insp.

Notes:
*5-8-2019 Dwelling appeared vacant at time of reval.

Washburn

Property Data

Neighborhood **1 Neighborhood One**

Tree Growth Year **0**

1ST MORTGAGE **0**

2ND MORTGAGE **0**

Zone/Land Use **1 Residential**

Secondary Zone

Topography **2 Rolling**

1.Level	4.Below St	7.LevelBog
2.Rolling	5.Low	8.
3.Above St	6.Swampy	9.

Utilities **4 Drilled Well** **6 Septic System**

1.Public	4.Dr Well	7.Cesspool
2.Water	5.Dug Well	8.
3.Sewer	6.Septic	9.None

Street **1 Paved**

1.Paved	4.Proposed	7.
2.Semi Imp	5.R/O/W	8.
3.Gravel	6.	9.None

TG PLAN YEAR **0**

Tif District # **0**

Sale Data

Sale Date **5/05/2009**

Price

Sale Type **2 Land & Buildings**

1.Land	4.Mobile	7.C/I L&B
2.L & B	5.Other	8.
3.Building	6.C/I Land	9.

Financing **1 Conventional**

1.Convent	4.Seller	7.
2.FHA/VA	5.Private	8.
3.Assumed	6.Cash	9.Unknown

Validity **2 Related Parties**

1.Valid	4.Split	7.Renovate
2.Related	5.Partial	8.Other
3.Distress	6.Exempt	9.

Verified **5 Public Record**

1.Buyer	4.Agent	7.Family
2.Seller	5.Pub Rec	8.Other
3.Lender	6.MLS	9.

Assessment Record

Year	Land	Buildings	Exempt	Total
2012	7,000	64,400	8,800	62,600
2013	9,100	64,400	0	73,500
2015	9,100	64,400	0	73,500
2018	9,100	64,400	0	73,500
2019	17,000	62,200	0	79,200
2020	17,000	62,100	0	79,100
2021	17,000	62,200	0	79,200
2022	17,000	65,300	0	82,300
2023	22,600	77,700	0	100,300

Land Data

Front Foot	Type	Effective Frontage	Effective Depth	Influence Factor	Influence Code
11.Regular Lot				%	
12.Delta Triangle				%	
13.Nabla Triangle				%	
14.Rear Land				%	
15.Class I Road				%	
				%	
				%	
Square Foot		**Square Feet**			
16.Class II Road				%	
17.Municipal Rese				%	
18.Munic Sep Lago				%	
19.Gravel Pit				%	
20.Industrial Bas				%	
				%	
				%	
Fract. Acre		**Acreage/Sites**			
21.Developed Pave	21	1.00	100	%	0
22.Undev Paved (F	28	1.00	100	%	0
23.Developed Grav				%	
Acres				%	
24.Undev Gravel (				%	
25.Comm Base Pave				%	
26.Comm Base Grav				%	
27.Backlot				%	
28.Rear Land				%	
29.Pavement				%	

Total Acreage 2.00

Influence Codes

1.Unimproved
2.Excess Frtg
3.Topography
4.Size/Shape
5.Access
6.Restriction
7.Open Space
8.View/Environ
9.Fract Share
Acres
30.Utility R O W
31.Tillable
32.Pasture
33.Orchard
34.Softwood F&O
35.Mixed Wood F&O
36.Hardwood F&O
37.Softwood TG
38.Mixed Wood TG
39.Hardwood TG
40.Wasteland
41.Open Space
42.Mobile Home Si
43.Condo Site
44.Lot Improvemen
45.Subdivision Lo
46.Heavy Ind Sit

Washburn

Map Lot 007-024 | Account 529 | Location 400 EVERETT ROAD | Card 1 Of 1 | 8/23/2023

Building Style	**1 Conventional**		
1.Conv.	5.Garrison	9.Gambrel	
2.Ranch	6.Salt Box	10.Other	
3.R Ranch	7.Contemp	11.Split	
4.Cape	8.Log	12.	
Dwelling Units	**1**		
Other Units	**0**		
Stories	**6 Two & 1/2 Story**		
1.1	4.1.5	7.	
2.2	5.1.75	8.	
3.3	6.2.5	9.	
Exterior Walls	**2 Vinyl/Aluminum**		
1.Wood	5.Stucco	9.T-111	
2.Vin/Al	6.Brick	10.Other	
3.Compos.	7.Stone	11.	
4.Asbestos	8.Concrete	12.	
Roof Surface	**1 Asphalt Shingles**		
1.Asphalt	4.Composit	7.	
2.Slate	5.Wood	8.	
3.Metal	6.Other	9.	
SF Masonry Trim	**0**		
OPEN-3-CUSTOM	**0**		
OPEN-4-CUSTOM	**0**		
Year Built	**1880**		
Year Remodeled	**0**		
Foundation	**3 Brick &/or Stone**		
1.Concrete	4.Wood	7.	
2.C Block	5.Slab	8.	
3.Br/Stone	6.Piers	9.	
Basement	**4 Full Basement**		
1.1/4 Bmt	4.Full Bmt	7.	
2.1/2 Bmt	5.None	8.	
3.3/4 Bmt	6.	9.None	
Bsmt Gar # Cars	**0**		
Wet Basement	**2 Damp Basement**		
1.Dry	4.	7.	
2.Damp	5.	8.	
3.Wet	6.	9.	

SF Bsmt Living	**0**		
Fin Bsmt Grade	**0 0**		
OPEN 5 OPTIONAL	**0**		
Heat Type	**100%**	**5 Forced Warm Air**	
1.HWBB	5.FWA	9.No Heat	
2.HWCI	6.GravWA	10.	
3.H Pump	7.Electric	11.	
4.Steam	8.Fl/Wall	12.	
Cool Type	**0%**	**9 None**	
1.Refrig	4.W&C Air	7.	
2.Evapor	5.	8.	
3.H Pump	6.	9.None	
Kitchen Style	**2 Typical**		
1.Modern	4.Obsolete	7.	
2.Typical	5.	8.	
3.Old Type	6.	9.None	
Bath(s) Style	**2 Typical Bath(s)**		
1.Modern	4.Obsolete	7.	
2.Typical	5.	8.	
3.Old Type	6.	9.None	
# Rooms	**9**		
# Bedrooms	**5**		
# Full Baths	**2**		
# Half Baths	**0**		
# Addn Fixtures	**0**		
# Fireplaces	**1**		

TRIO Software
A Division of Harris Computer Systems

Layout	**1 Typical**		
1.Typical	4.	7.	
2.Inadeq	5.	8.	
3.Poor	6.	9.	
Attic	**9 None**		
1.1/4 Fin	4.Full Fin	7.	
2.1/2 Fin	5.Fl/Stair	8.	
3.3/4 Fin	6.	9.None	
Insulation	**1 Full**		
1.Full	4.Minimal	7.	
2.Heavy	5.Partial	8.	
3.Capped	6.	9.None	
Unfinished %	**0%**		
Grade & Factor	**2 Fair 105%**		
1.E Grade	4.B Grade	7.	
2.D Grade	5.A Grade	8.SC Grade	
3.C Grade	6.AA Grade	9.Same	
SQFT (Footprint)	**1020**		
Condition	**4 Average**		
1.Poor	4.Avg	7.V G	
2.Fair	5.Avg+	8.Exc	
3.Avg-	6.Good	9.Same	
Phys. % Good	**0%**		
Funct. % Good	**90%**		
Functional Code	**4 Delapidation**		
1.Incomp	4.Delap	7.No Power	
2.O-Built	5.Bsmt	8.LongTerm	
3.Damage	6.Common	9.None	
Econ. % Good	**100%**		
Economic Code	**None**		
0.None	3.No Power	7.	
1.Location	4.Generate	8.	
2.Encroach	9.None	9.	
Entrance Code	**5 Estimated**		
1.Interior	4.Vacant	7.	
2.Refusal	5.Estimate	8.	
3.Informed	6.Reviewed	9.	
Information Code	**5 Estimate**		
1.Owner	4.Agent	7.	
2.Relative	5.Estimate	8.	
3.Tenant	6.Other	9.	

Date Inspected 10/17/2018

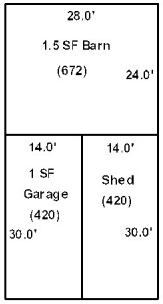

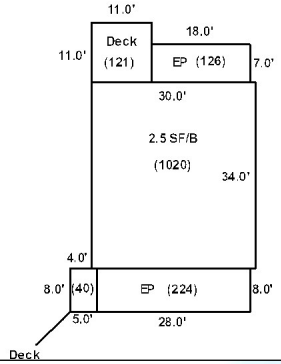

Additions, Outbuildings & Improvements

Type	Year	Units	Grade	Cond	Phys.	Funct.	Sound Value
68 Wood Deck	1970	40	2 105	2	0 %	100 %	
22 Encl Frame Porch	1965	224	2 110	3	0 %	100 %	
22 Encl Frame Porch	1965	126	2 105	3	0 %	100 %	
68 Wood Deck	1970	121	3 95	3	0 %	100 %	
23 Frame Garage	1950	420	2 110	2	0 %	65 %	
24 Frame Shed	1950	420	2 100	2	0 %	75 %	
115 1.5 Story Barn	1900	672	2 110	2	0 %	75 %	
					%	%	
					%	%	
					%	%	

1.One Story Fram
2.Two Story Fram
3.Three Story Fr
4.1 & 1/2 Story
5.1 & 3/4 Story
6.2 & 1/2 Story
21.Open Frame Por
22.Encl Frame Por
23.Frame Garage
24.Frame Shed
25.Frame Bay Wind
26.1SFr Overhang
27.Unfin Basement
28.Unfinished Att
29.Finished Attic

Map Lot 007-025 Account 382 Location 434 EVERETT ROAD Card 1 Of 1 8/23/2023

DERR, KEVIN T
DERR, BRENDA S
434 EVERETT ROAD
WASHBURN ME 04786

B4354P58

Previous Owner
Dow, Anthony
Dow, Lisa
434 Everett Road
Washburn ME
Sale Date: 10/11/2006

Inspection Witnessed By:

X Date

No./Date	Description	Date Insp.

Notes:

Property Data

Neighborhood **1 Neighborhood One**

Tree Growth Year **0**

1ST MORTGAGE **0**

2ND MORTGAGE **0**

Zone/Land Use **1 Residential**

Secondary Zone

Topography **2 Rolling**

1.Level	4.Below St	7.LevelBog
2.Rolling	5.Low	8.
3.Above St	6.Swampy	9.

Utilities **4 Drilled Well** **6 Septic System**

1.Public	4.Dr Well	7.Cesspool
2.Water	5.Dug Well	8.
3.Sewer	6.Septic	9.None

Street **1 Paved**

1.Paved	4.Proposed	7.
2.Semi Imp	5.R/O/W	8.
3.Gravel	6.	9.None

TG PLAN YEAR **0**

Tif District # **0**

Sale Data

Sale Date **10/11/2006**

Price **99,085**

Sale Type **2 Land & Buildings**

1.Land	4.Mobile	7.C/I L&B
2.L & B	5.Other	8.
3.Building	6.C/I Land	9.

Financing

1.Convent	4.Seller	7.
2.FHA/VA	5.Private	8.
3.Assumed	6.Cash	9.Unknown

Validity **1 Arms Length Sale**

1.Valid	4.Split	7.Renovate
2.Related	5.Partial	8.Other
3.Distress	6.Exempt	9.

Verified **5 Public Record**

1.Buyer	4.Agent	7.Family
2.Seller	5.Pub Rec	8.Other
3.Lender	6.MLS	9.

Assessment Record

Year	Land	Buildings	Exempt	Total
2012	6,700	55,700	8,800	53,600
2013	8,700	55,700	8,800	55,600
2015	8,700	55,700	9,000	55,400
2018	8,700	55,700	18,400	46,000
2019	16,700	91,200	20,000	87,900
2020	16,700	90,300	25,000	82,000
2021	16,700	91,200	25,000	82,900
2022	16,700	95,700	25,000	87,400
2023	22,300	113,800	25,000	111,100

Land Data

Front Foot	Type	Effective Frontage	Effective Depth	Influence Factor	Influence Code
11.Regular Lot				%	
12.Delta Triangle				%	
13.Nabla Triangle				%	
14.Rear Land				%	
15.Class I Road				%	
				%	
				%	
Square Foot		**Square Feet**			
16.Class II Road				%	
17.Municipal Rese				%	
18.Munic Sep Lago				%	
19.Gravel Pit				%	
20.Industrial Bas				%	
				%	
				%	
Fract. Acre		**Acreage/Sites**			
21.Developed Pave	21	1.00	100	%	0
22.Undev Paved (F	28	0.46	100	%	0
23.Developed Grav				%	
Acres				%	
24.Undev Gravel (				%	
25.Comm Base Pave				%	
26.Comm Base Grav				%	
27.Backlot				%	
28.Rear Land				%	
29.Pavement				%	

Total Acreage 1.46

Influence Codes

1.Unimproved
2.Excess Frtg
3.Topography
4.Size/Shape
5.Access
6.Restriction
7.Open Space
8.View/Environ
9.Fract Share
Acres
30.Utility R O W
31.Tillable
32.Pasture
33.Orchard
34.Softwood F&O
35.Mixed Wood F&O
36.Hardwood F&O
37.Softwood TG
38.Mixed Wood TG
39.Hardwood TG
40.Wasteland
41.Open Space
42.Mobile Home Si
43.Condo Site
44.Lot Improvemen
45.Subdivision Lo
46.Heavy Ind Sit

Washburn

Washburn

Map Lot 007-025 | Account 382 | Location 434 EVERETT ROAD | Card 1 Of 1 | 8/23/2023

Building Style	**4 Cape Cod**		
1.Conv.	5.Garrison	9.Gambrel	
2.Ranch	6.Salt Box	10.Other	
3.R Ranch	7.Contemp	11.Split	
4.Cape	8.Log	12.	
Dwelling Units	**1**		
Other Units	**0**		
Stories	**4 One & 1/2 Story**		
1.1	4.1.5	7.	
2.2	5.1.75	8.	
3.3	6.2.5	9.	
Exterior Walls	**2 Vinyl/Aluminum**		
1.Wood	5.Stucco	9.T-111	
2.Vin/Al	6.Brick	10.Other	
3.Compos.	7.Stone	11.	
4.Asbestos	8.Concrete	12.	
Roof Surface	**3 Sheet Metal**		
1.Asphalt	4.Composit	7.	
2.Slate	5.Wood	8.	
3.Metal	6.Other	9.	
SF Masonry Trim	**0**		
OPEN-3-CUSTOM	**0**		
OPEN-4-CUSTOM	**0**		
Year Built	**1970**		
Year Remodeled	**0**		
Foundation	**1 Concrete**		
1.Concrete	4.Wood	7.	
2.C Block	5.Slab	8.	
3.Br/Stone	6.Piers	9.	
Basement	**4 Full Basement**		
1.1/4 Bmt	4.Full Bmt	7.	
2.1/2 Bmt	5.None	8.	
3.3/4 Bmt	6.	9.None	
Bsmt Gar # Cars	**0**		
Wet Basement	**1 Dry Basement**		
1.Dry	4.	7.	
2.Damp	5.	8.	
3.Wet	6.	9.	

SF Bsmt Living	**0**		
Fin Bsmt Grade	**0 0**		
OPEN 5 OPTIONAL	**0**		
Heat Type	**100%**	**5 Forced Warm Air**	
1.HWBB	5.FWA	9.No Heat	
2.HWCI	6.GravWA	10.	
3.H Pump	7.Electric	11.	
4.Steam	8.Fl/Wall	12.	
Cool Type	**0%**	**9 None**	
1.Refrig	4.W&C Air	7.	
2.Evapor	5.	8.	
3.H Pump	6.	9.None	
Kitchen Style	**2 Typical**		
1.Modern	4.Obsolete	7.	
2.Typical	5.	8.	
3.Old Type	6.	9.None	
Bath(s) Style	**2 Typical Bath(s)**		
1.Modern	4.Obsolete	7.	
2.Typical	5.	8.	
3.Old Type	6.	9.None	
# Rooms	**5**		
# Bedrooms	**3**		
# Full Baths	**1**		
# Half Baths	**0**		
# Addn Fixtures	**0**		
# Fireplaces	**0**		

TRIO Software
A Division of Harris Computer Systems

Layout	**1 Typical**		
1.Typical	4.	7.	
2.Inadeq	5.	8.	
3.Poor	6.	9.	
Attic	**9 None**		
1.1/4 Fin	4.Full Fin	7.	
2.1/2 Fin	5.Fl/Stair	8.	
3.3/4 Fin	6.	9.None	
Insulation	**1 Full**		
1.Full	4.Minimal	7.	
2.Heavy	5.Partial	8.	
3.Capped	6.	9.None	
Unfinished %	**0%**		
Grade & Factor	**3 Average 100%**		
1.E Grade	4.B Grade	7.	
2.D Grade	5.A Grade	8.SC Grade	
3.C Grade	6.AA Grade	9.Same	
SQFT (Footprint)	**1312**		
Condition	**5 Above Average**		
1.Poor	4.Avg	7.V G	
2.Fair	5.Avg+	8.Exc	
3.Avg-	6.Good	9.Same	
Phys. % Good	**0%**		
Funct. % Good	**100%**		
Functional Code	**9 None**		
1.Incomp	4.Delap	7.No Power	
2.O-Built	5.Bsmt	8.LongTerm	
3.Damage	6.Common	9.None	
Econ. % Good	**100%**		
Economic Code	**None**		
0.None	3.No Power	7.	
1.Location	4.Generate	8.	
2.Encroach	9.None	9.	
Entrance Code	**5 Estimated**		
1.Interior	4.Vacant	7.	
2.Refusal	5.Estimate	8.	
3.Informed	6.Reviewed	9.	
Information Code	**5 Estimate**		
1.Owner	4.Agent	7.	
2.Relative	5.Estimate	8.	
3.Tenant	6.Other	9.	

Date Inspected 10/17/2018

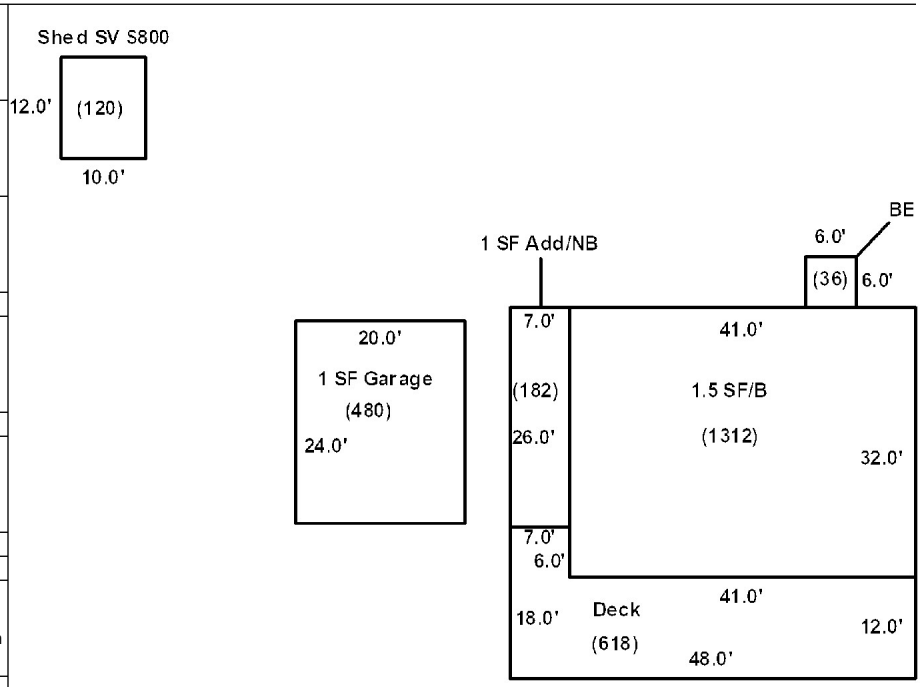

Additions, Outbuildings & Improvements

Type	Year	Units	Grade	Cond	Phys.	Funct.	Sound Value
1 One Story Frame	1980	182	3 100	4	0 %	100 %	
40 Basement Entry	1970	36	9 100	9	0 %	100 %	
68 Wood Deck	2000	618	3 95	3	0 %	100 %	
23 Frame Garage	1970	480	2 100	1	0 %	75 %	
24 Frame Shed	0				%	%	800
					%	%	
					%	%	
					%	%	
					%	%	
					%	%	

1.One Story Fram
2.Two Story Fram
3.Three Story Fr
4.1 & 1/2 Story
5.1 & 3/4 Story
6.2 & 1/2 Story
21.Open Frame Por
22.Encl Frame Por
23.Frame Garage
24.Frame Shed
25.Frame Bay Wind
26.1SFr Overhang
27.Unfin Basement
28.Unfinished Att
29.Finished Attic

Map Lot 007-026 Account 547 Location EVERETT ROAD Card 1 Of 1 8/23/2023

WILL-TURN FARMS LLC
PO BOX 264
WASHBURN ME 04786

B6046P284

Previous Owner
PORTER FARMS, LLC
601 GRIFFIN RIDGE ROAD

MAPLETON ME 04757
Sale Date: 8/03/2020

Previous Owner
IRVING & MARR FARMS
221 DAVIS ROAD

WOODLAND ME 04736
Sale Date: 7/27/2016

Inspection Witnessed By:

X Date

No./Date	Description	Date Insp.

Notes:

Property Data

Neighborhood	**1 Neighborhood One**	
Tree Growth Year	**0**	
1ST MORTGAGE		**0**
2ND MORTGAGE		**0**
Zone/Land Use	**2 Commercial**	
Secondary Zone		
Topography	**1 Level**	
1.Level	4.Below St	7.LevelBog
2.Rolling	5.Low	8.
3.Above St	6.Swampy	9.
Utilities		
1.Public	4.Dr Well	7.Cesspool
2.Water	5.Dug Well	8.
3.Sewer	6.Septic	9.None
Street	**1 Paved**	
1.Paved	4.Proposed	7.
2.Semi Imp	5.R/O/W	8.
3.Gravel	6.	9.None
TG PLAN YEAR		**0**
Tif District #		**0**

Sale Data

Sale Date		**8/03/2020**
Price		**366,900**
Sale Type	**1 Land Only**	
1.Land	4.Mobile	7.C/I L&B
2.L & B	5.Other	8.
3.Building	6.C/I Land	9.
Financing	**9 Unknown**	
1.Convent	4.Seller	7.
2.FHA/VA	5.Private	8.
3.Assumed	6.Cash	9.Unknown
Validity	**4 Split/Assemblage**	
1.Valid	4.Split	7.Renovate
2.Related	5.Partial	8.Other
3.Distress	6.Exempt	9.
Verified	**5 Public Record**	
1.Buyer	4.Agent	7.Family
2.Seller	5.Pub Rec	8.Other
3.Lender	6.MLS	9.

Assessment Record

Year	Land	Buildings	Exempt	Total
2012	34,300	0	0	34,300
2013	44,500	0	0	44,500
2015	44,500	0	0	44,500
2018	44,500	0	0	44,500
2019	73,500	0	0	73,500
2020	73,500	0	0	73,500
2021	73,500	0	0	73,500
2022	73,500	0	0	73,500
2023	81,300	0	0	81,300

Land Data

Front Foot	Type	Effective Frontage	Effective Depth	Influence Factor	Influence Code
11.Regular Lot				%	
12.Delta Triangle				%	
13.Nabla Triangle				%	
14.Rear Land				%	
15.Class I Road				%	
				%	
				%	
Square Foot		**Square Feet**			
16.Class II Road				%	
17.Municipal Rese				%	
18.Munic Sep Lago				%	
19.Gravel Pit				%	
20.Industrial Bas				%	
				%	
				%	
Fract. Acre		**Acreage/Sites**			
21.Developed Pave	31	25.00	100	%	0
22.Undev Paved (F	28	97.00	100	%	0
23.Developed Grav				%	
Acres				%	
24.Undev Gravel (				%	
25.Comm Base Pave				%	
26.Comm Base Grav				%	
27.Backlot				%	
28.Rear Land				%	
29.Pavement				%	

Total Acreage 122.00

Influence Codes

1.Unimproved
2.Excess Frtg
3.Topography
4.Size/Shape
5.Access
6.Restriction
7.Open Space
8.View/Environ
9.Fract Share
Acres
30.Utility R O W
31.Tillable
32.Pasture
33.Orchard
34.Softwood F&O
35.Mixed Wood F&O
36.Hardwood F&O
37.Softwood TG
38.Mixed Wood TG
39.Hardwood TG
40.Wasteland
41.Open Space
42.Mobile Home Si
43.Condo Site
44.Lot Improvemen
45.Subdivision Lo
46.Heavy Ind Sit

Washburn

Washburn

Map Lot 007-026 | Account 547 | Location EVERETT ROAD | Card 1 Of 1 | 8/23/2023

Building Style **0**		
1.Conv.	5.Garrison	9.Gambrel
2.Ranch	6.Salt Box	10.Other
3.R Ranch	7.Contemp	11.Split
4.Cape	8.Log	12.
Dwelling Units **0**		
Other Units **0**		
Stories **0**		
1.1	4.1.5	7.
2.2	5.1.75	8.
3.3	6.2.5	9.
Exterior Walls **0**		
1.Wood	5.Stucco	9.T-111
2.Vin/Al	6.Brick	10.Other
3.Compos.	7.Stone	11.
4.Asbestos	8.Concrete	12.
Roof Surface **0**		
1.Asphalt	4.Composit	7.
2.Slate	5.Wood	8.
3.Metal	6.Other	9.
SF Masonry Trim **0**		
OPEN-3-CUSTOM **0**		
OPEN-4-CUSTOM **0**		
Year Built **0**		
Year Remodeled **0**		
Foundation **0**		
1.Concrete	4.Wood	7.
2.C Block	5.Slab	8.
3.Br/Stone	6.Piers	9.
Basement **0**		
1.1/4 Bmt	4.Full Bmt	7.
2.1/2 Bmt	5.None	8.
3.3/4 Bmt	6.	9.None
Bsmt Gar # Cars **0**		
Wet Basement **0**		
1.Dry	4.	7.
2.Damp	5.	8.
3.Wet	6.	9.

SF Bsmt Living **0**		
Fin Bsmt Grade **0 0**		
OPEN 5 OPTIONAL **0**		
Heat Type **100%** **0**		
1.HWBB	5.FWA	9.No Heat
2.HWCI	6.GravWA	10.
3.H Pump	7.Electric	11.
4.Steam	8.Fl/Wall	12.
Cool Type **0%** **9 None**		
1.Refrig	4.W&C Air	7.
2.Evapor	5.	8.
3.H Pump	6.	9.None
Kitchen Style **0**		
1.Modern	4.Obsolete	7.
2.Typical	5.	8.
3.Old Type	6.	9.None
Bath(s) Style **0**		
1.Modern	4.Obsolete	7.
2.Typical	5.	8.
3.Old Type	6.	9.None
# Rooms **0**		
# Bedrooms **0**		
# Full Baths **0**		
# Half Baths **0**		
# Addn Fixtures **0**		
# Fireplaces **0**		

TRIO Software
A Division of Harris Computer Systems

Layout **0**		
1.Typical	4.	7.
2.Inadeq	5.	8.
3.Poor	6.	9.
Attic **0**		
1.1/4 Fin	4.Full Fin	7.
2.1/2 Fin	5.Fl/Stair	8.
3.3/4 Fin	6.	9.None
Insulation **0**		
1.Full	4.Minimal	7.
2.Heavy	5.Partial	8.
3.Capped	6.	9.None
Unfinished % **0%**		
Grade & Factor **0 0%**		
1.E Grade	4.B Grade	7.
2.D Grade	5.A Grade	8.SC Grade
3.C Grade	6.AA Grade	9.Same
SQFT (Footprint) **0**		
Condition **0**		
1.Poor	4.Avg	7.V G
2.Fair	5.Avg+	8.Exc
3.Avg-	6.Good	9.Same
Phys. % Good **0%**		
Funct. % Good **100%**		
Functional Code **9 None**		
1.Incomp	4.Delap	7.No Power
2.O-Built	5.Bsmt	8.LongTerm
3.Damage	6.Common	9.None
Econ. % Good **100%**		
Economic Code **None**		
0.None	3.No Power	7.
1.Location	4.Generate	8.
2.Encroach	9.None	9.
Entrance Code **0**		
1.Interior	4.Vacant	7.
2.Refusal	5.Estimate	8.
3.Informed	6.Reviewed	9.
Information Code **0**		
1.Owner	4.Agent	7.
2.Relative	5.Estimate	8.
3.Tenant	6.Other	9.

Date Inspected

Additions, Outbuildings & Improvements

Type	Year	Units	Grade	Cond	Phys.	Funct.	Sound Value
					%	%	
					%	%	
					%	%	
					%	%	
					%	%	
					%	%	
					%	%	
					%	%	
					%	%	
					%	%	

1.One Story Fram
2.Two Story Fram
3.Three Story Fr
4.1 & 1/2 Story
5.1 & 3/4 Story
6.2 & 1/2 Story
21.Open Frame Por
22.Encl Frame Por
23.Frame Garage
24.Frame Shed
25.Frame Bay Wind
26.1SFr Overhang
27.Unfin Basement
28.Unfinished Att
29.Finished Attic

Map Lot 007-027 Account 997 Location 427 EVERETT ROAD Card 1 Of 1 8/23/2023

LIVE WIRE MARKETING CORPORATION
30 CARROLL STREET #2
MANCHESTER NH 03102

B6077P295

Previous Owner
MITCHELL, MICHAEL
14800 STATE ROUTE 161 W

PLAIN CITY OH 43064
Sale Date: 10/08/2020

Previous Owner
Vanscooter, Albert
Vanscooter, Marilyn
427 Everett Road
Washburn ME
Sale Date: 7/27/2006

Inspection Witnessed By:

X Date

No./Date	Description	Date Insp.

Notes:
*2-20-2019 At time of reval the lister ran into angry dogs both beside the garage as well as out behind the house. All sheds and garage are estimates as is the back side of the house.

Washburn

Property Data

Neighborhood **1 Neighborhood One**

Tree Growth Year **0**

1ST MORTGAGE **0**

2ND MORTGAGE **0**

Zone/Land Use **1 Residential**

Secondary Zone

Topography **2 Rolling**

1.Level 4.Below St 7.LevelBog
2.Rolling 5.Low 8.
3.Above St 6.Swampy 9.

Utilities **4 Drilled Well** **6 Septic System**

1.Public 4.Dr Well 7.Cesspool
2.Water 5.Dug Well 8.
3.Sewer 6.Septic 9.None

Street **1 Paved**

1.Paved 4.Proposed 7.
2.Semi Imp 5.R/O/W 8.
3.Gravel 6. 9.None

TG PLAN YEAR **0**

Tif District # **0**

Sale Data

Sale Date **10/08/2020**

Price **45,000**

Sale Type **2 Land & Buildings**

1.Land 4.Mobile 7.C/I L&B
2.L & B 5.Other 8.
3.Building 6.C/I Land 9.

Financing **9 Unknown**

1.Convent 4.Seller 7.
2.FHA/VA 5.Private 8.
3.Assumed 6.Cash 9.Unknown

Validity **1 Arms Length Sale**

1.Valid 4.Split 7.Renovate
2.Related 5.Partial 8.Other
3.Distress 6.Exempt 9.

Verified **5 Public Record**

1.Buyer 4.Agent 7.Family
2.Seller 5.Pub Rec 8.Other
3.Lender 6.MLS 9.

Assessment Record

Year	Land	Buildings	Exempt	Total
2012	8,600	49,100	0	57,700
2013	11,200	49,100	0	60,300
2015	11,200	49,100	0	60,300
2018	11,200	49,100	0	60,300
2019	19,500	51,500	0	71,000
2020	19,500	51,400	0	70,900
2021	19,500	51,500	0	71,000
2022	19,500	53,900	0	73,400
2023	25,500	63,700	0	89,200

Land Data

Front Foot	Type	Effective Frontage	Effective Depth	Influence Factor	Influence Code
11.Regular Lot				%	
12.Delta Triangle				%	
13.Nabla Triangle				%	
14.Rear Land				%	
15.Class I Road				%	
				%	
				%	
Square Foot		**Square Feet**			
16.Class II Road				%	
17.Municipal Rese				%	
18.Munic Sep Lago				%	
19.Gravel Pit				%	
20.Industrial Bas				%	
				%	
				%	
Fract. Acre		**Acreage/Sites**			
21.Developed Pave	21	1.00	100	%	0
22.Undev Paved (F	28	6.00	100	%	0
23.Developed Grav				%	
Acres				%	
24.Undev Gravel (				%	
25.Comm Base Pave				%	
26.Comm Base Grav				%	
27.Backlot				%	
28.Rear Land				%	
29.Pavement				%	

Total Acreage 7.00

Influence Codes

1.Unimproved
2.Excess Frtg
3.Topography
4.Size/Shape
5.Access
6.Restriction
7.Open Space
8.View/Environ
9.Fract Share
Acres
30.Utility R O W
31.Tillable
32.Pasture
33.Orchard
34.Softwood F&O
35.Mixed Wood F&O
36.Hardwood F&O
37.Softwood TG
38.Mixed Wood TG
39.Hardwood TG
40.Wasteland
41.Open Space
42.Mobile Home Si
43.Condo Site
44.Lot Improvemen
45.Subdivision Lo
46.Heavy Ind Sit

Washburn

Map Lot 007-027 | Account 997 | Location 427 EVERETT ROAD | Card 1 Of 1 | 8/23/2023

Building Style		
1.Conv.	5.Garrison	9.Gambrel
2.Ranch	6.Salt Box	10.Other
3.R Ranch	7.Contemp	11.Split
4.Cape	8.Log	12.

Dwelling Units
Other Units

Stories		
1.1	4.1.5	7.
2.2	5.1.75	8.
3.3	6.2.5	9.

Exterior Walls		
1.Wood	5.Stucco	9.T-111
2.Vin/Al	6.Brick	10.Other
3.Compos.	7.Stone	11.
4.Asbestos	8.Concrete	12.

Roof Surface		
1.Asphalt	4.Composit	7.
2.Slate	5.Wood	8.
3.Metal	6.Other	9.

SF Masonry Trim
OPEN-3-CUSTOM
OPEN-4-CUSTOM
Year Built
Year Remodeled

Foundation		
1.Concrete	4.Wood	7.
2.C Block	5.Slab	8.
3.Br/Stone	6.Piers	9.

Basement		
1.1/4 Bmt	4.Full Bmt	7.
2.1/2 Bmt	5.None	8.
3.3/4 Bmt	6.	9.None

Bsmt Gar # Cars

Wet Basement		
1.Dry	4.	7.
2.Damp	5.	8.
3.Wet	6.	9.

SF Bsmt Living
Fin Bsmt Grade
OPEN 5 OPTIONAL

Heat Type **100%**		
1.HWBB	5.FWA	9.No Heat
2.HWCI	6.GravWA	10.
3.H Pump	7.Electric	11.
4.Steam	8.Fl/Wall	12.

Cool Type **0%**		
1.Refrig	4.W&C Air	7.
2.Evapor	5.	8.
3.H Pump	6.	9.None

Kitchen Style		
1.Modern	4.Obsolete	7.
2.Typical	5.	8.
3.Old Type	6.	9.None

Bath(s) Style		
1.Modern	4.Obsolete	7.
2.Typical	5.	8.
3.Old Type	6.	9.None

Rooms
Bedrooms
Full Baths
Half Baths
Addn Fixtures
Fireplaces

TRIO Software
A Division of Harris Computer Systems

Layout		
1.Typical	4.	7.
2.Inadeq	5.	8.
3.Poor	6.	9.

Attic		
1.1/4 Fin	4.Full Fin	7.
2.1/2 Fin	5.Fl/Stair	8.
3.3/4 Fin	6.	9.None

Insulation		
1.Full	4.Minimal	7.
2.Heavy	5.Partial	8.
3.Capped	6.	9.None

Unfinished %

Grade & Factor		
1.E Grade	4.B Grade	7.
2.D Grade	5.A Grade	8.SC Grade
3.C Grade	6.AA Grade	9.Same

SQFT (Footprint)

Condition		
1.Poor	4.Avg	7.V G
2.Fair	5.Avg+	8.Exc
3.Avg-	6.Good	9.Same

Phys. % Good
Funct. % Good

Functional Code		
1.Incomp	4.Delap	7.No Power
2.O-Built	5.Bsmt	8.LongTerm
3.Damage	6.Common	9.None

Econ. % Good

Economic Code		
0.None	3.No Power	7.
1.Location	4.Generate	8.
2.Encroach	9.None	9.

Entrance Code **3 Information Only**		
1.Interior	4.Vacant	7.
2.Refusal	5.Estimate	8.
3.Informed	6.Reviewed	9.

Information Code **1 Owner**		
1.Owner	4.Agent	7.
2.Relative	5.Estimate	8.
3.Tenant	6.Other	9.

Date Inspected 6/20/2019

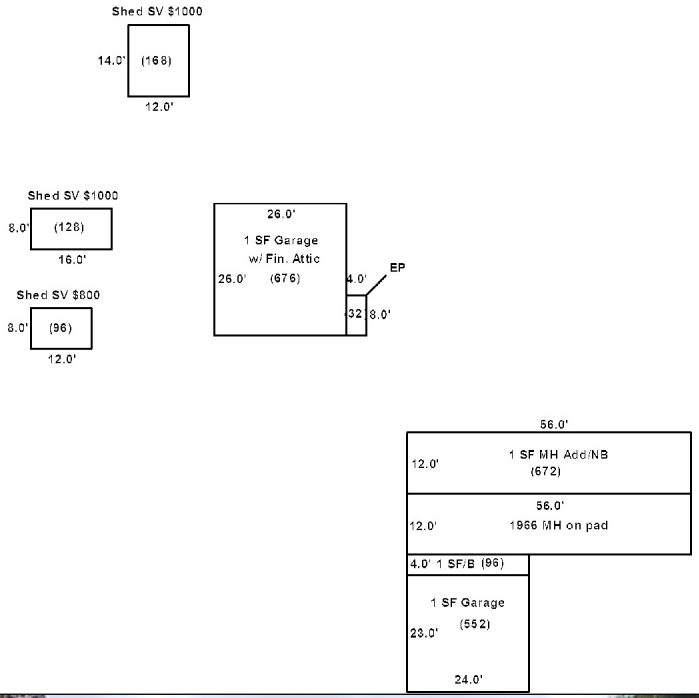

Additions, Outbuildings & Improvements

Type	Year	Units	Grade	Cond	Phys.	Funct.	Sound Value
997 12Mobile Home	1966	12x56	4 100	6	0 %	100 %	
18 1 S-MH add	1987	672	2 110	4	0 %	100 %	
1 One Story Frame	1993	96	2 110	4	0 %	100 %	
23 Frame Garage	1993	552	3 95	4	0 %	100 %	
23 Frame Garage	1985	676	3 100	4	0 %	100 %	
29 Finished Attic	1985	676	2 110	4	0 %	100 %	
22 Encl Frame Porch	1985	32	2 110	4	0 %	100 %	
24 Frame Shed	0				%	%	1,000
24 Frame Shed	0				%	%	800
24 Frame Shed	0				%	%	1,000

1.One Story Fram
2.Two Story Fram
3.Three Story Fr
4.1 & 1/2 Story
5.1 & 3/4 Story
6.2 & 1/2 Story
21.Open Frame Por
22.Encl Frame Por
23.Frame Garage
24.Frame Shed
25.Frame Bay Wind
26.1SFr Overhang
27.Unfin Basement
28.Unfinished Att
29.Finished Attic

Map Lot 007-028 Account 142 Location 375 EVERETT ROAD Card 1 Of 1 8/23/2023

SCOTT, RYAN
P.O. BOX 506
WASHBURN ME 04786

B4014P118 B4137P295

Property Data

Neighborhood **1 Neighborhood One**

Tree Growth Year **0**

1ST MORTGAGE **0**

2ND MORTGAGE **0**

Zone/Land Use **1 Residential**

Secondary Zone

Topography **2 Rolling**

1.Level	4.Below St	7.LevelBog
2.Rolling	5.Low	8.
3.Above St	6.Swampy	9.

Utilities **4 Drilled Well** **6 Septic System**

1.Public	4.Dr Well	7.Cesspool
2.Water	5.Dug Well	8.
3.Sewer	6.Septic	9.None

Street **1 Paved**

1.Paved	4.Proposed	7.
2.Semi Imp	5.R/O/W	8.
3.Gravel	6.	9.None

TG PLAN YEAR **0**

Tif District # **0**

Sale Data

Sale Date **8/11/2004**

Price

Sale Type **2 Land & Buildings**

1.Land	4.Mobile	7.C/I L&B
2.L & B	5.Other	8.
3.Building	6.C/I Land	9.

Financing **1 Conventional**

1.Convent	4.Seller	7.
2.FHA/VA	5.Private	8.
3.Assumed	6.Cash	9.Unknown

Validity **2 Related Parties**

1.Valid	4.Split	7.Renovate
2.Related	5.Partial	8.Other
3.Distress	6.Exempt	9.

Verified **5 Public Record**

1.Buyer	4.Agent	7.Family
2.Seller	5.Pub Rec	8.Other
3.Lender	6.MLS	9.

Assessment Record

Year	Land	Buildings	Exempt	Total
2012	13,800	99,100	8,800	104,100
2013	17,900	119,200	8,800	128,300
2015	17,900	119,200	9,000	128,100
2018	17,900	119,200	18,400	118,700
2019	22,800	132,600	20,000	135,400
2020	22,800	132,300	25,000	130,100
2021	31,000	132,600	25,000	138,600
2022	31,000	139,100	25,000	145,100
2023	38,800	164,900	25,000	178,700

Land Data

Front Foot	Type	Effective Frontage	Effective Depth	Influence Factor	Influence Code
11.Regular Lot				%	
12.Delta Triangle				%	
13.Nabla Triangle				%	
14.Rear Land				%	
15.Class I Road				%	
				%	
				%	
Square Foot		**Square Feet**			
16.Class II Road				%	
17.Municipal Rese				%	
18.Munic Sep Lago				%	
19.Gravel Pit				%	
20.Industrial Bas				%	
				%	
				%	
Fract. Acre		**Acreage/Sites**			
21.Developed Pave	21	1.00	100	%	0
22.Undev Paved (F	28	29.00	100	%	0
23.Developed Grav				%	
Acres				%	
24.Undev Gravel (				%	
25.Comm Base Pave				%	
26.Comm Base Grav				%	
27.Backlot				%	
28.Rear Land				%	
29.Pavement				%	

Total Acreage 30.00

Influence Codes

1.Unimproved
2.Excess Frtg
3.Topography
4.Size/Shape
5.Access
6.Restriction
7.Open Space
8.View/Environ
9.Fract Share
Acres
30.Utility R O W
31.Tillable
32.Pasture
33.Orchard
34.Softwood F&O
35.Mixed Wood F&O
36.Hardwood F&O
37.Softwood TG
38.Mixed Wood TG
39.Hardwood TG
40.Wasteland
41.Open Space
42.Mobile Home Si
43.Condo Site
44.Lot Improvemen
45.Subdivision Lo
46.Heavy Ind Sit

Inspection Witnessed By:

X Date

No./Date	Description	Date Insp.

Notes:
*5-8-2019 -20% for attached shed.

Washburn

Washburn

Map Lot 007-028 | Account 142 | Location 375 EVERETT ROAD | Card 1 Of 1 | 8/23/2023

Building Style	**4 Cape Cod**		
1.Conv.	5.Garrison	9.Gambrel	
2.Ranch	6.Salt Box	10.Other	
3.R Ranch	7.Contemp	11.Split	
4.Cape	8.Log	12.	
Dwelling Units	**1**		
Other Units	**0**		
Stories	**4 One & 1/2 Story**		
1.1	4.1.5	7.	
2.2	5.1.75	8.	
3.3	6.2.5	9.	
Exterior Walls	**1 Wood Siding**		
1.Wood	5.Stucco	9.T-111	
2.Vin/Al	6.Brick	10.Other	
3.Compos.	7.Stone	11.	
4.Asbestos	8.Concrete	12.	
Roof Surface	**1 Asphalt Shingles**		
1.Asphalt	4.Composit	7.	
2.Slate	5.Wood	8.	
3.Metal	6.Other	9.	
SF Masonry Trim	**0**		
OPEN-3-CUSTOM	**0**		
OPEN-4-CUSTOM	**0**		
Year Built	**2000**		
Year Remodeled	**0**		
Foundation	**1 Concrete**		
1.Concrete	4.Wood	7.	
2.C Block	5.Slab	8.	
3.Br/Stone	6.Piers	9.	
Basement	**4 Full Basement**		
1.1/4 Bmt	4.Full Bmt	7.	
2.1/2 Bmt	5.None	8.	
3.3/4 Bmt	6.	9.None	
Bsmt Gar # Cars	**0**		
Wet Basement	**1 Dry Basement**		
1.Dry	4.	7.	
2.Damp	5.	8.	
3.Wet	6.	9.	

SF Bsmt Living	**882**		
Fin Bsmt Grade	**3 105**		
OPEN 5 OPTIONAL	**0**		
Heat Type	**100%**	**1 Hot Water BB**	
1.HWBB	5.FWA	9.No Heat	
2.HWCI	6.GravWA	10.	
3.H Pump	7.Electric	11.	
4.Steam	8.Fl/Wall	12.	
Cool Type	**0%**	**9 None**	
1.Refrig	4.W&C Air	7.	
2.Evapor	5.	8.	
3.H Pump	6.	9.None	
Kitchen Style	**2 Typical**		
1.Modern	4.Obsolete	7.	
2.Typical	5.	8.	
3.Old Type	6.	9.None	
Bath(s) Style	**2 Typical Bath(s)**		
1.Modern	4.Obsolete	7.	
2.Typical	5.	8.	
3.Old Type	6.	9.None	
# Rooms	**5**		
# Bedrooms	**3**		
# Full Baths	**2**		
# Half Baths	**0**		
# Addn Fixtures	**0**		
# Fireplaces	**0**		

TRIO Software
A Division of Harris Computer Systems

Layout	**1 Typical**		
1.Typical	4.	7.	
2.Inadeq	5.	8.	
3.Poor	6.	9.	
Attic	**9 None**		
1.1/4 Fin	4.Full Fin	7.	
2.1/2 Fin	5.Fl/Stair	8.	
3.3/4 Fin	6.	9.None	
Insulation	**1 Full**		
1.Full	4.Minimal	7.	
2.Heavy	5.Partial	8.	
3.Capped	6.	9.None	
Unfinished %	**0%**		
Grade & Factor	**3 Average 115%**		
1.E Grade	4.B Grade	7.	
2.D Grade	5.A Grade	8.SC Grade	
3.C Grade	6.AA Grade	9.Same	
SQFT (Footprint)	**1176**		
Condition	**5 Above Average**		
1.Poor	4.Avg	7.V G	
2.Fair	5.Avg+	8.Exc	
3.Avg-	6.Good	9.Same	
Phys. % Good	**0%**		
Funct. % Good	**100%**		
Functional Code	**9 None**		
1.Incomp	4.Delap	7.No Power	
2.O-Built	5.Bsmt	8.LongTerm	
3.Damage	6.Common	9.None	
Econ. % Good	**100%**		
Economic Code	**None**		
0.None	3.No Power	7.	
1.Location	4.Generate	8.	
2.Encroach	9.None	9.	
Entrance Code	**5 Estimated**		
1.Interior	4.Vacant	7.	
2.Refusal	5.Estimate	8.	
3.Informed	6.Reviewed	9.	
Information Code	**5 Estimate**		
1.Owner	4.Agent	7.	
2.Relative	5.Estimate	8.	
3.Tenant	6.Other	9.	

Date Inspected 10/18/2018

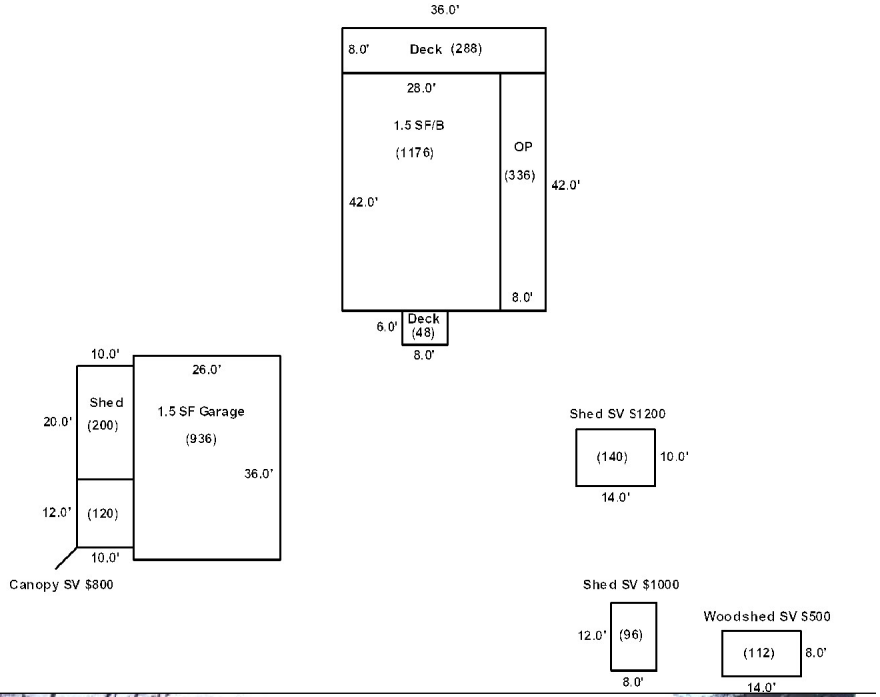

Additions, Outbuildings & Improvements

Type	Year	Units	Grade	Cond	Phys.	Funct.	Sound Value
68 Wood Deck	2000	288	3 100	4	0 %	100 %	
21 Open Frame	2000	336	3 100	4	0 %	100 %	
68 Wood Deck	2000	48	3 100	4	0 %	100 %	
82 1.5 S-Gar	2002	936	3 100	4	0 %	100 %	
24 Frame Shed	2005	200	2 110	4	0 %	80 %	
61 Canopy	0				%	%	800
24 Frame Shed	0				%	%	1,200
24 Frame Shed	0				%	%	1,000
24 Frame Shed	0				%	%	500
					%	%	

1.One Story Fram
2.Two Story Fram
3.Three Story Fr
4.1 & 1/2 Story
5.1 & 3/4 Story
6.2 & 1/2 Story
21.Open Frame Por
22.Encl Frame Por
23.Frame Garage
24.Frame Shed
25.Frame Bay Wind
26.1SFr Overhang
27.Unfin Basement
28.Unfinished Att
29.Finished Attic

Map Lot 007-028A Account 1131 Location Card 1 Of 1 8/23/2023

Scott, Russell
Scott, Ryan
PO BOX 506
WASHBURN ME 04786

B5654P253

Property Data

Neighborhood **1 Neighborhood One**

Tree Growth Year **0**

1ST MORTGAGE **0**

2ND MORTGAGE **0**

Zone/Land Use **1 Residential**

Secondary Zone

Topography **2 Rolling**

1.Level	4.Below St	7.LevelBog
2.Rolling	5.Low	8.
3.Above St	6.Swampy	9.

Utilities

1.Public	4.Dr Well	7.Cesspool
2.Water	5.Dug Well	8.
3.Sewer	6.Septic	9.None

Street **1 Paved**

1.Paved	4.Proposed	7.
2.Semi Imp	5.R/O/W	8.
3.Gravel	6.	9.None

TG PLAN YEAR **0**

Tif District # **0**

Sale Data

Sale Date

Price

Sale Type

1.Land	4.Mobile	7.C/I L&B
2.L & B	5.Other	8.
3.Building	6.C/I Land	9.

Financing

1.Convent	4.Seller	7.
2.FHA/VA	5.Private	8.
3.Assumed	6.Cash	9.Unknown

Validity

1.Valid	4.Split	7.Renovate
2.Related	5.Partial	8.Other
3.Distress	6.Exempt	9.

Verified

1.Buyer	4.Agent	7.Family
2.Seller	5.Pub Rec	8.Other
3.Lender	6.MLS	9.

Assessment Record

Year	Land	Buildings	Exempt	Total
2018	23,800	2,400	0	26,200
2019	36,500	6,400	0	42,900
2020	36,500	6,300	0	42,800
2021	36,500	6,400	0	42,900
2022	36,500	6,700	0	43,200
2023	42,900	7,900	0	50,800

Land Data

Front Foot	Type	Effective Frontage	Effective Depth	Influence Factor	Influence Code
11.Regular Lot				%	
12.Delta Triangle				%	
13.Nabla Triangle				%	
14.Rear Land				%	
15.Class I Road				%	
				%	
				%	
Square Foot		**Square Feet**			
16.Class II Road				%	
17.Municipal Rese				%	
18.Munic Sep Lago				%	
19.Gravel Pit				%	
20.Industrial Bas				%	
				%	
				%	
Fract. Acre		**Acreage/Sites**			
21.Developed Pave	22	1.00	100	%	0
22.Undev Paved (F	28	55.00	100	%	0
23.Developed Grav				%	
Acres				%	
24.Undev Gravel (				%	
25.Comm Base Pave				%	
26.Comm Base Grav				%	
27.Backlot				%	
28.Rear Land				%	
29.Pavement				%	

Total Acreage 56.00

Influence Codes

1.Unimproved
2.Excess Frtg
3.Topography
4.Size/Shape
5.Access
6.Restriction
7.Open Space
8.View/Environ
9.Fract Share
Acres
30.Utility R O W
31.Tillable
32.Pasture
33.Orchard
34.Softwood F&O
35.Mixed Wood F&O
36.Hardwood F&O
37.Softwood TG
38.Mixed Wood TG
39.Hardwood TG
40.Wasteland
41.Open Space
42.Mobile Home Si
43.Condo Site
44.Lot Improvemen
45.Subdivision Lo
46.Heavy Ind Sit

Inspection Witnessed By:

X Date

No./Date	Description	Date Insp.

Notes:

Washburn

Washburn

Map Lot 007-028A | Account 1131 | Location | Card 1 Of 1 | 8/23/2023

Building Style **0**		
1.Conv.	5.Garrison	9.Gambrel
2.Ranch	6.Salt Box	10.Other
3.R Ranch	7.Contemp	11.Split
4.Cape	8.Log	12.
Dwelling Units **0**		
Other Units **0**		
Stories **0**		
1.1	4.1.5	7.
2.2	5.1.75	8.
3.3	6.2.5	9.
Exterior Walls **0**		
1.Wood	5.Stucco	9.T-111
2.Vin/Al	6.Brick	10.Other
3.Compos.	7.Stone	11.
4.Asbestos	8.Concrete	12.
Roof Surface **0**		
1.Asphalt	4.Composit	7.
2.Slate	5.Wood	8.
3.Metal	6.Other	9.
SF Masonry Trim **0**		
OPEN-3-CUSTOM **0**		
OPEN-4-CUSTOM **0**		
Year Built **0**		
Year Remodeled **0**		
Foundation **0**		
1.Concrete	4.Wood	7.
2.C Block	5.Slab	8.
3.Br/Stone	6.Piers	9.
Basement **0**		
1.1/4 Bmt	4.Full Bmt	7.
2.1/2 Bmt	5.None	8.
3.3/4 Bmt	6.	9.None
Bsmt Gar # Cars **0**		
Wet Basement **0**		
1.Dry	4.	7.
2.Damp	5.	8.
3.Wet	6.	9.

SF Bsmt Living **0**		
Fin Bsmt Grade **0 0**		
OPEN 5 OPTIONAL **0**		
Heat Type **100%** **0**		
1.HWBB	5.FWA	9.No Heat
2.HWCI	6.GravWA	10.
3.H Pump	7.Electric	11.
4.Steam	8.Fl/Wall	12.
Cool Type **0%** **9 None**		
1.Refrig	4.W&C Air	7.
2.Evapor	5.	8.
3.H Pump	6.	9.None
Kitchen Style **0**		
1.Modern	4.Obsolete	7.
2.Typical	5.	8.
3.Old Type	6.	9.None
Bath(s) Style **0**		
1.Modern	4.Obsolete	7.
2.Typical	5.	8.
3.Old Type	6.	9.None
# Rooms **0**		
# Bedrooms **0**		
# Full Baths **0**		
# Half Baths **0**		
# Addn Fixtures **0**		
# Fireplaces **0**		

TRIO Software
A Division of Harris Computer Systems

Layout **0**		
1.Typical	4.	7.
2.Inadeq	5.	8.
3.Poor	6.	9.
Attic **0**		
1.1/4 Fin	4.Full Fin	7.
2.1/2 Fin	5.Fl/Stair	8.
3.3/4 Fin	6.	9.None
Insulation **0**		
1.Full	4.Minimal	7.
2.Heavy	5.Partial	8.
3.Capped	6.	9.None
Unfinished % **0%**		
Grade & Factor **0 0%**		
1.E Grade	4.B Grade	7.
2.D Grade	5.A Grade	8.SC Grade
3.C Grade	6.AA Grade	9.Same
SQFT (Footprint) **0**		
Condition **0**		
1.Poor	4.Avg	7.V G
2.Fair	5.Avg+	8.Exc
3.Avg-	6.Good	9.Same
Phys. % Good **0%**		
Funct. % Good **100%**		
Functional Code **9 None**		
1.Incomp	4.Delap	7.No Power
2.O-Built	5.Bsmt	8.LongTerm
3.Damage	6.Common	9.None
Econ. % Good **100%**		
Economic Code **None**		
0.None	3.No Power	7.
1.Location	4.Generate	8.
2.Encroach	9.None	9.
Entrance Code **5 Estimated**		
1.Interior	4.Vacant	7.
2.Refusal	5.Estimate	8.
3.Informed	6.Reviewed	9.
Information Code **5 Estimate**		
1.Owner	4.Agent	7.
2.Relative	5.Estimate	8.
3.Tenant	6.Other	9.

Date Inspected 10/18/2018

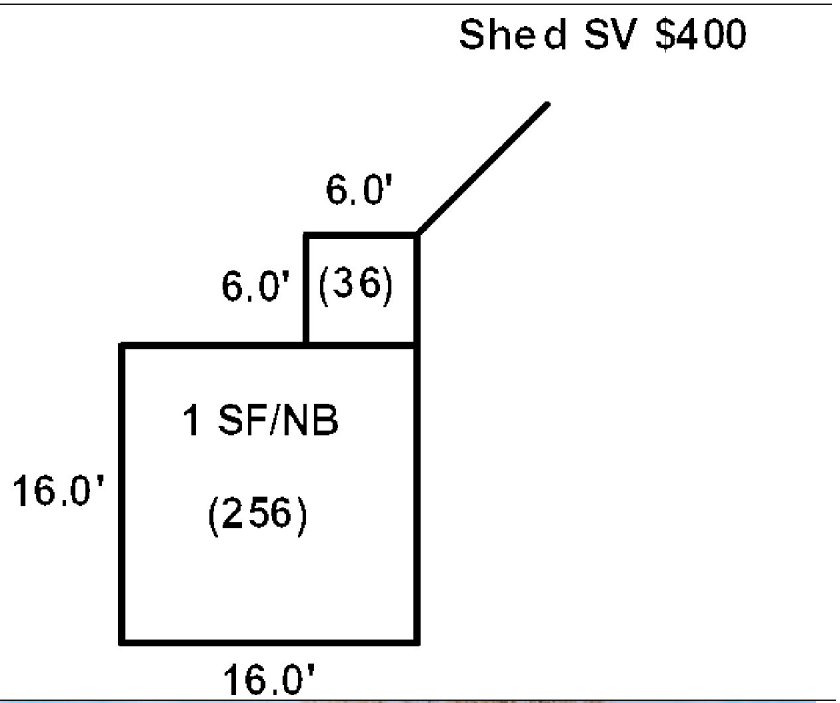

Additions, Outbuildings & Improvements

Type	Year	Units	Grade	Cond	Phys.	Funct.	Sound Value
1 One Story Frame	2010	256	1 110	2	0 %	100 %	
24 Frame Shed	0				%	%	400
					%	%	
					%	%	
					%	%	
					%	%	
					%	%	
					%	%	
					%	%	
					%	%	

1.One Story Fram
2.Two Story Fram
3.Three Story Fr
4.1 & 1/2 Story
5.1 & 3/4 Story
6.2 & 1/2 Story
21.Open Frame Por
22.Encl Frame Por
23.Frame Garage
24.Frame Shed
25.Frame Bay Wind
26.1SFr Overhang
27.Unfin Basement
28.Unfinished Att
29.Finished Attic

Map Lot 007-028B | Account 1049 | Location 407 EVERETT ROAD | Card 1 Of 1 | 8/23/2023

BRAGG, CHAD L
407 EVERETT ROAD
WASHBURN ME 04786

B5631P210 B5631P210 B5631P212

Previous Owner
THERIAULT, JACOB A.
P.O. Box 151

WASHBURN ME 04786
Sale Date: 1/17/2017

Previous Owner
Wardwell, Joel P.
407 Everett Road

Washburn ME 04786
Sale Date: 10/02/2012

Inspection Witnessed By:

X Date

No./Date	Description	Date Insp.

Notes:
*5-8-2019 -20% for attached shed.

Washburn

Property Data

Neighborhood	**1 Neighborhood One**
Tree Growth Year	**0**
1ST MORTGAGE	**0**
2ND MORTGAGE	**0**
Zone/Land Use	**1 Residential**
Secondary Zone	
Topography	**2 Rolling**

1.Level	4.Below St	7.LevelBog
2.Rolling	5.Low	8.
3.Above St	6.Swampy	9.

Utilities **4 Drilled Well** **6 Septic System**

1.Public	4.Dr Well	7.Cesspool
2.Water	5.Dug Well	8.
3.Sewer	6.Septic	9.None

Street **1 Paved**

1.Paved	4.Proposed	7.
2.Semi Imp	5.R/O/W	8.
3.Gravel	6.	9.None

TG PLAN YEAR	**0**
Tif District #	**0**

Sale Data

Sale Date	**1/17/2017**
Price	**20,000**
Sale Type	**2 Land & Buildings**

1.Land	4.Mobile	7.C/I L&B
2.L & B	5.Other	8.
3.Building	6.C/I Land	9.

Financing **1 Conventional**

1.Convent	4.Seller	7.
2.FHA/VA	5.Private	8.
3.Assumed	6.Cash	9.Unknown

Validity **1 Arms Length Sale**

1.Valid	4.Split	7.Renovate
2.Related	5.Partial	8.Other
3.Distress	6.Exempt	9.

Verified **5 Public Record**

1.Buyer	4.Agent	7.Family
2.Seller	5.Pub Rec	8.Other
3.Lender	6.MLS	9.

Assessment Record

Year	Land	Buildings	Exempt	Total
2012	7,300	12,700	8,800	11,200
2013	9,400	12,700	0	22,100
2015	9,400	12,700	9,000	13,100
2018	9,400	12,700	18,400	3,700
2019	17,300	20,500	20,000	17,800
2020	17,300	20,400	25,000	12,700
2021	17,300	20,500	25,000	12,800
2022	17,300	21,600	25,000	13,900
2023	22,900	25,700	25,000	23,600

Land Data

Front Foot	Type	Effective Frontage	Effective Depth	Influence Factor	Influence Code
11.Regular Lot				%	
12.Delta Triangle				%	
13.Nabla Triangle				%	
14.Rear Land				%	
15.Class I Road				%	
				%	
				%	
Square Foot		**Square Feet**			
16.Class II Road				%	
17.Municipal Rese				%	
18.Munic Sep Lago				%	
19.Gravel Pit				%	
20.Industrial Bas				%	
				%	
				%	
Fract. Acre		**Acreage/Sites**			
21.Developed Pave	21	1.00	100	%	0
22.Undev Paved (F	28	1.50	100	%	0
23.Developed Grav				%	
Acres				%	
24.Undev Gravel (				%	
25.Comm Base Pave				%	
26.Comm Base Grav				%	
27.Backlot				%	
28.Rear Land				%	
29.Pavement				%	

Total Acreage 2.50

Influence Codes

1.Unimproved
2.Excess Frtg
3.Topography
4.Size/Shape
5.Access
6.Restriction
7.Open Space
8.View/Environ
9.Fract Share
Acres
30.Utility R O W
31.Tillable
32.Pasture
33.Orchard
34.Softwood F&O
35.Mixed Wood F&O
36.Hardwood F&O
37.Softwood TG
38.Mixed Wood TG
39.Hardwood TG
40.Wasteland
41.Open Space
42.Mobile Home Si
43.Condo Site
44.Lot Improvemen
45.Subdivision Lo
46.Heavy Ind Sit

Washburn

Map Lot 007-028B | Account 1049 | Location 407 EVERETT ROAD | Card 1 Of 1 | 8/23/2023

Building Style **0**		
1.Conv.	5.Garrison	9.Gambrel
2.Ranch	6.Salt Box	10.Other
3.R Ranch	7.Contemp	11.Split
4.Cape	8.Log	12.
Dwelling Units **0**		
Other Units **0**		
Stories **0**		
1.1	4.1.5	7.
2.2	5.1.75	8.
3.3	6.2.5	9.
Exterior Walls **0**		
1.Wood	5.Stucco	9.T-111
2.Vin/Al	6.Brick	10.Other
3.Compos.	7.Stone	11.
4.Asbestos	8.Concrete	12.
Roof Surface **0**		
1.Asphalt	4.Composit	7.
2.Slate	5.Wood	8.
3.Metal	6.Other	9.
SF Masonry Trim **0**		
OPEN-3-CUSTOM **0**		
OPEN-4-CUSTOM **0**		
Year Built **0**		
Year Remodeled **0**		
Foundation **0**		
1.Concrete	4.Wood	7.
2.C Block	5.Slab	8.
3.Br/Stone	6.Piers	9.
Basement **0**		
1.1/4 Bmt	4.Full Bmt	7.
2.1/2 Bmt	5.None	8.
3.3/4 Bmt	6.	9.None
Bsmt Gar # Cars **0**		
Wet Basement **0**		
1.Dry	4.	7.
2.Damp	5.	8.
3.Wet	6.	9.

SF Bsmt Living **0**		
Fin Bsmt Grade **0 0**		
OPEN 5 OPTIONAL **0**		
Heat Type **100%** **0**		
1.HWBB	5.FWA	9.No Heat
2.HWCI	6.GravWA	10.
3.H Pump	7.Electric	11.
4.Steam	8.Fl/Wall	12.
Cool Type **0%** **9 None**		
1.Refrig	4.W&C Air	7.
2.Evapor	5.	8.
3.H Pump	6.	9.None
Kitchen Style **0**		
1.Modern	4.Obsolete	7.
2.Typical	5.	8.
3.Old Type	6.	9.None
Bath(s) Style **0**		
1.Modern	4.Obsolete	7.
2.Typical	5.	8.
3.Old Type	6.	9.None
# Rooms **0**		
# Bedrooms **0**		
# Full Baths **0**		
# Half Baths **0**		
# Addn Fixtures **0**		
# Fireplaces **0**		

TRIO Software
A Division of Harris Computer Systems

Layout **0**		
1.Typical	4.	7.
2.Inadeq	5.	8.
3.Poor	6.	9.
Attic **0**		
1.1/4 Fin	4.Full Fin	7.
2.1/2 Fin	5.Fl/Stair	8.
3.3/4 Fin	6.	9.None
Insulation **0**		
1.Full	4.Minimal	7.
2.Heavy	5.Partial	8.
3.Capped	6.	9.None
Unfinished % **0%**		
Grade & Factor **0 0%**		
1.E Grade	4.B Grade	7.
2.D Grade	5.A Grade	8.SC Grade
3.C Grade	6.AA Grade	9.Same
SQFT (Footprint) **0**		
Condition **0**		
1.Poor	4.Avg	7.V G
2.Fair	5.Avg+	8.Exc
3.Avg-	6.Good	9.Same
Phys. % Good **0%**		
Funct. % Good **100%**		
Functional Code **9 None**		
1.Incomp	4.Delap	7.No Power
2.O-Built	5.Bsmt	8.LongTerm
3.Damage	6.Common	9.None
Econ. % Good **100%**		
Economic Code **None**		
0.None	3.No Power	7.
1.Location	4.Generate	8.
2.Encroach	9.None	9.
Entrance Code **5 Estimated**		
1.Interior	4.Vacant	7.
2.Refusal	5.Estimate	8.
3.Informed	6.Reviewed	9.
Information Code **5 Estimate**		
1.Owner	4.Agent	7.
2.Relative	5.Estimate	8.
3.Tenant	6.Other	9.

Date Inspected 10/18/2018

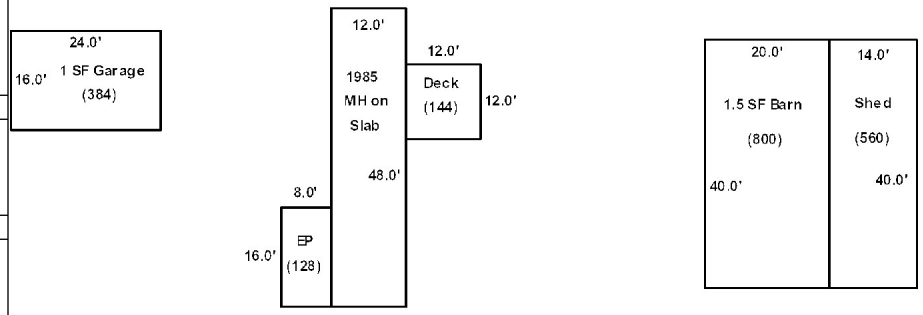

Additions, Outbuildings & Improvements

Type	Year	Units	Grade	Cond	Phys.	Funct.	Sound Value
997 12Mobile Home	1985	12x48	3 100	4	0 %	100 %	
48 Concrete Slab	1985	576	3 100	4	0 %	100 %	
22 Encl Frame Porch	1995	128	2 105	3	0 %	100 %	
68 Wood Deck	2000	144	3 95	3	0 %	100 %	
23 Frame Garage	1980	384	2 110	3	0 %	100 %	
59 Barn	1965	800	2 105	2	0 %	100 %	
24 Frame Shed	1980	560	2 105	2	0 %	80 %	
					%	%	
					%	%	
					%	%	

1.One Story Fram
2.Two Story Fram
3.Three Story Fr
4.1 & 1/2 Story
5.1 & 3/4 Story
6.2 & 1/2 Story
21.Open Frame Por
22.Encl Frame Por
23.Frame Garage
24.Frame Shed
25.Frame Bay Wind
26.1SFr Overhang
27.Unfin Basement
28.Unfinished Att
29.Finished Attic

Map Lot 007-028C | Account 1036 | Location 413 EVERETT ROAD | Card 1 Of 1 | 8/23/2023

Pothier, Linda A.
413 Everett Road
Washburn ME 04786

B5414P315 B5414P317 B5738P293 B6369P81

Previous Owner
GRAHAM, ERIK M
MEEKER, KELSEY N
413 EVERETT ROAD
WASHBURN ME 04786
Sale Date: 9/01/2022

Previous Owner
WILLETT-SEWALL, JILL
SEWALL, DAVID O.
CHRISTOPHER G. & WADE A. WILLETT
DYER BROOK ME 04747
Sale Date: 1/03/2018

Inspection Witnessed By:

X Date

No./Date	Description	Date Insp.

Notes:

Washburn

Property Data

Neighborhood	**1 Neighborhood One**		
Tree Growth Year	**0**		
1ST MORTGAGE		**0**	
2ND MORTGAGE		**0**	
Zone/Land Use	**1 Residential**		
Secondary Zone			
Topography	**2 Rolling**		
1.Level	4.Below St	7.LevelBog	
2.Rolling	5.Low	8.	
3.Above St	6.Swampy	9.	
Utilities	**4 Drilled Well**	**6 Septic System**	
1.Public	4.Dr Well	7.Cesspool	
2.Water	5.Dug Well	8.	
3.Sewer	6.Septic	9.None	
Street	**1 Paved**		
1.Paved	4.Proposed	7.	
2.Semi Imp	5.R/O/W	8.	
3.Gravel	6.	9.None	
TG PLAN YEAR		**0**	
Tif District #		**0**	

Sale Data

Sale Date		**9/01/2022**	
Price		**265,000**	
Sale Type	**2 Land & Buildings**		
1.Land	4.Mobile	7.C/I L&B	
2.L & B	5.Other	8.	
3.Building	6.C/I Land	9.	
Financing	**1 Conventional**		
1.Convent	4.Seller	7.	
2.FHA/VA	5.Private	8.	
3.Assumed	6.Cash	9.Unknown	
Validity	**1 Arms Length Sale**		
1.Valid	4.Split	7.Renovate	
2.Related	5.Partial	8.Other	
3.Distress	6.Exempt	9.	
Verified	**5 Public Record**		
1.Buyer	4.Agent	7.Family	
2.Seller	5.Pub Rec	8.Other	
3.Lender	6.MLS	9.	

Assessment Record

Year	Land	Buildings	Exempt	Total
2012	9,100	132,400	0	141,500
2013	11,900	132,400	0	144,300
2015	11,900	132,400	0	144,300
2018	12,500	132,400	0	144,900
2019	21,000	155,100	20,000	156,100
2020	21,000	153,300	25,000	149,300
2021	21,000	155,100	25,000	151,100
2022	21,000	162,700	25,000	158,700
2023	27,200	193,400	0	220,600

Land Data

Front Foot	Type	Effective Frontage	Effective Depth	Influence Factor	Influence Code
11.Regular Lot				%	
12.Delta Triangle				%	
13.Nabla Triangle				%	
14.Rear Land				%	
15.Class I Road				%	
				%	
				%	
Square Foot		**Square Feet**			
16.Class II Road				%	
17.Municipal Rese				%	
18.Munic Sep Lago				%	
19.Gravel Pit				%	
20.Industrial Bas				%	
				%	
				%	
Fract. Acre		**Acreage/Sites**			
21.Developed Pave	21	1.00	100	%	0
22.Undev Paved (F	28	9.00	100	%	0
23.Developed Grav				%	
Acres				%	
24.Undev Gravel (				%	
25.Comm Base Pave				%	
26.Comm Base Grav				%	
27.Backlot				%	
28.Rear Land				%	
29.Pavement				%	

Total Acreage 10.00

Influence Codes

1.Unimproved
2.Excess Frtg
3.Topography
4.Size/Shape
5.Access
6.Restriction
7.Open Space
8.View/Environ
9.Fract Share
Acres
30.Utility R O W
31.Tillable
32.Pasture
33.Orchard
34.Softwood F&O
35.Mixed Wood F&O
36.Hardwood F&O
37.Softwood TG
38.Mixed Wood TG
39.Hardwood TG
40.Wasteland
41.Open Space
42.Mobile Home Si
43.Condo Site
44.Lot Improvemen
45.Subdivision Lo
46.Heavy Ind Sit

Washburn

Map Lot 007-028C | Account 1036 | Location 413 EVERETT ROAD | Card 1 Of 1 | 8/23/2023

Building Style	**4 Cape Cod**		
1.Conv.	5.Garrison	9.Gambrel	
2.Ranch	6.Salt Box	10.Other	
3.R Ranch	7.Contemp	11.Split	
4.Cape	8.Log	12.	
Dwelling Units	**1**		
Other Units	**0**		
Stories	**4 One & 1/2 Story**		
1.1	4.1.5	7.	
2.2	5.1.75	8.	
3.3	6.2.5	9.	
Exterior Walls	**2 Vinyl/Aluminum**		
1.Wood	5.Stucco	9.T-111	
2.Vin/Al	6.Brick	10.Other	
3.Compos.	7.Stone	11.	
4.Asbestos	8.Concrete	12.	
Roof Surface	**1 Asphalt Shingles**		
1.Asphalt	4.Composit	7.	
2.Slate	5.Wood	8.	
3.Metal	6.Other	9.	
SF Masonry Trim	**0**		
OPEN-3-CUSTOM	**0**		
OPEN-4-CUSTOM	**0**		
Year Built	**2002**		
Year Remodeled	**0**		
Foundation	**1 Concrete**		
1.Concrete	4.Wood	7.	
2.C Block	5.Slab	8.	
3.Br/Stone	6.Piers	9.	
Basement	**4 Full Basement**		
1.1/4 Bmt	4.Full Bmt	7.	
2.1/2 Bmt	5.None	8.	
3.3/4 Bmt	6.	9.None	
Bsmt Gar # Cars	**0**		
Wet Basement	**1 Dry Basement**		
1.Dry	4.	7.	
2.Damp	5.	8.	
3.Wet	6.	9.	

SF Bsmt Living	**260**		
Fin Bsmt Grade	**3 105**		
OPEN 5 OPTIONAL	**0**		
Heat Type	**100%**	**1 Hot Water BB**	
1.HWBB	5.FWA	9.No Heat	
2.HWCI	6.GravWA	10.	
3.H Pump	7.Electric	11.	
4.Steam	8.Fl/Wall	12.	
Cool Type	**0%**	**9 None**	
1.Refrig	4.W&C Air	7.	
2.Evapor	5.	8.	
3.H Pump	6.	9.None	
Kitchen Style	**2 Typical**		
1.Modern	4.Obsolete	7.	
2.Typical	5.	8.	
3.Old Type	6.	9.None	
Bath(s) Style	**2 Typical Bath(s)**		
1.Modern	4.Obsolete	7.	
2.Typical	5.	8.	
3.Old Type	6.	9.None	
# Rooms	**5**		
# Bedrooms	**3**		
# Full Baths	**2**		
# Half Baths	**0**		
# Addn Fixtures	**0**		
# Fireplaces	**0**		

TRIO Software
A Division of Harris Computer Systems

Layout	**1 Typical**		
1.Typical	4.	7.	
2.Inadeq	5.	8.	
3.Poor	6.	9.	
Attic	**9 None**		
1.1/4 Fin	4.Full Fin	7.	
2.1/2 Fin	5.Fl/Stair	8.	
3.3/4 Fin	6.	9.None	
Insulation	**1 Full**		
1.Full	4.Minimal	7.	
2.Heavy	5.Partial	8.	
3.Capped	6.	9.None	
Unfinished %	**0%**		
Grade & Factor	**4 Good 100%**		
1.E Grade	4.B Grade	7.	
2.D Grade	5.A Grade	8.SC Grade	
3.C Grade	6.AA Grade	9.Same	
SQFT (Footprint)	**520**		
Condition	**5 Above Average**		
1.Poor	4.Avg	7.V G	
2.Fair	5.Avg+	8.Exc	
3.Avg-	6.Good	9.Same	
Phys. % Good	**0%**		
Funct. % Good	**100%**		
Functional Code	**9 None**		
1.Incomp	4.Delap	7.No Power	
2.O-Built	5.Bsmt	8.LongTerm	
3.Damage	6.Common	9.None	
Econ. % Good	**100%**		
Economic Code	**None**		
0.None	3.No Power	7.	
1.Location	4.Generate	8.	
2.Encroach	9.None	9.	
Entrance Code	**1 Interior Inspect**		
1.Interior	4.Vacant	7.	
2.Refusal	5.Estimate	8.	
3.Informed	6.Reviewed	9.	
Information Code	**1 Owner**		
1.Owner	4.Agent	7.	
2.Relative	5.Estimate	8.	
3.Tenant	6.Other	9.	

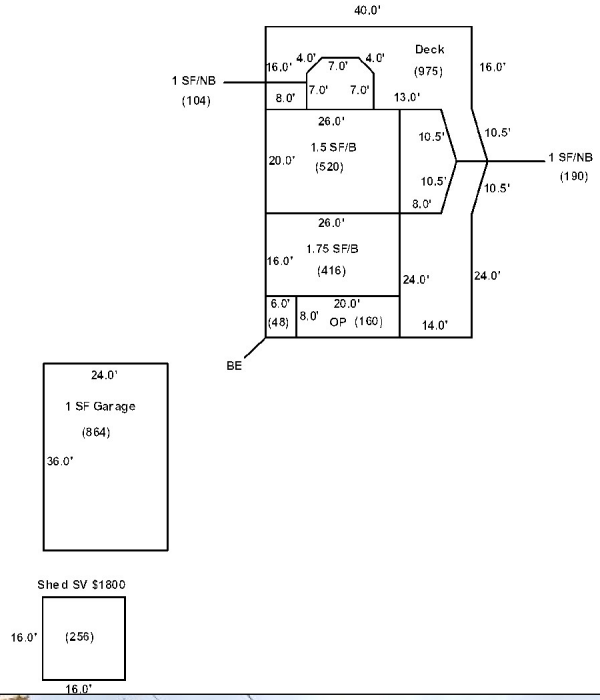

Date Inspected 10/18/2018

Additions, Outbuildings & Improvements

Type	Year	Units	Grade	Cond	Phys.	Funct.	Sound Value
15 1.75 Story/Bsmt	2002	416	9 100	9	0 %	100 %	
1 One Story Frame	2002	104	3 105	4	0 %	100 %	
1 One Story Frame	2002	190	3 105	4	0 %	100 %	
68 Wood Deck	2002	975	3 105	4	0 %	100 %	
40 Basement Entry	2002	48	9 100	9	0 %	100 %	
21 Open Frame	2002	160	3 100	4	0 %	100 %	
23 Frame Garage	2002	846	3 100	3	0 %	100 %	
24 Frame Shed	0				%	%	1,800
					%	%	
					%	%	

1.One Story Fram
2.Two Story Fram
3.Three Story Fr
4.1 & 1/2 Story
5.1 & 3/4 Story
6.2 & 1/2 Story
21.Open Frame Por
22.Encl Frame Por
23.Frame Garage
24.Frame Shed
25.Frame Bay Wind
26.1SFr Overhang
27.Unfin Basement
28.Unfinished Att
29.Finished Attic

Map Lot 007-029 Account 805 Location 359 EVERETT ROAD Card 1 Of 1 8/23/2023

SCOTT, RUSSELL
SCOTT, GISELE
PO BOX 506
WASHBURN ME 04786

B2513P283

Inspection Witnessed By:

X Date

No./Date	Description	Date Insp.

Notes:
*5-8-2019 -20% for attached shed.

Washburn

Property Data

Neighborhood **1 Neighborhood One**

Tree Growth Year **0**

1ST MORTGAGE **0**

2ND MORTGAGE **0**

Zone/Land Use **1 Residential**

Secondary Zone

Topography **2 Rolling**

1.Level 4.Below St 7.LevelBog
2.Rolling 5.Low 8.
3.Above St 6.Swampy 9.

Utilities **4 Drilled Well** **6 Septic System**

1.Public 4.Dr Well 7.Cesspool
2.Water 5.Dug Well 8.
3.Sewer 6.Septic 9.None

Street **1 Paved**

1.Paved 4.Proposed 7.
2.Semi Imp 5.R/O/W 8.
3.Gravel 6. 9.None

TG PLAN YEAR **0**

Tif District # **0**

Sale Data

Sale Date **10/23/1992**

Price

Sale Type **2 Land & Buildings**

1.Land 4.Mobile 7.C/I L&B
2.L & B 5.Other 8.
3.Building 6.C/I Land 9.

Financing

1.Convent 4.Seller 7.
2.FHA/VA 5.Private 8.
3.Assumed 6.Cash 9.Unknown

Validity **1 Arms Length Sale**

1.Valid 4.Split 7.Renovate
2.Related 5.Partial 8.Other
3.Distress 6.Exempt 9.

Verified **5 Public Record**

1.Buyer 4.Agent 7.Family
2.Seller 5.Pub Rec 8.Other
3.Lender 6.MLS 9.

Assessment Record

Year	Land	Buildings	Exempt	Total
2012	18,000	111,200	8,800	120,400
2013	23,400	114,300	8,800	128,900
2015	23,400	114,300	9,000	128,700
2018	23,400	114,300	18,400	119,300
2019	33,500	110,000	20,000	123,500
2020	33,600	108,900	25,000	117,500
2021	44,500	110,000	25,000	129,500
2022	44,500	115,400	25,000	134,900
2023	53,700	137,300	25,000	166,000

Land Data

Front Foot

11.Regular Lot
12.Delta Triangle
13.Nabla Triangle
14.Rear Land
15.Class I Road

Square Foot

16.Class II Road
17.Municipal Rese
18.Munic Sep Lago
19.Gravel Pit
20.Industrial Bas

Fract. Acre

21.Developed Pave
22.Undev Paved (F
23.Developed Grav

Acres

24.Undev Gravel (
25.Comm Base Pave
26.Comm Base Grav
27.Backlot
28.Rear Land
29.Pavement

Type	Effective Frontage	Effective Depth	Influence Factor	Influence Code
			%	
			%	
			%	
			%	
			%	
			%	
			%	
Square Feet				
29		2,800	75 %	0
			%	
			%	
			%	
			%	
			%	
			%	
Acreage/Sites				
21		1.00	100 %	0
28		13.00	100 %	0
28		32.00	100 %	0
40		4.00	100 %	0
			%	
			%	
			%	

Total Acreage 50.00

Influence Codes

1.Unimproved
2.Excess Frtg
3.Topography
4.Size/Shape
5.Access
6.Restriction
7.Open Space
8.View/Environ
9.Fract Share

Acres

30.Utility R O W
31.Tillable
32.Pasture
33.Orchard
34.Softwood F&O
35.Mixed Wood F&O
36.Hardwood F&O
37.Softwood TG
38.Mixed Wood TG
39.Hardwood TG
40.Wasteland
41.Open Space
42.Mobile Home Si
43.Condo Site
44.Lot Improvemen
45.Subdivision Lo
46.Heavy Ind Sit

Washburn

Map Lot 007-029 | Account 805 | Location 359 EVERETT ROAD | Card 1 Of 1 | 8/23/2023

Building Style	**2 Ranch**		
1.Conv.	5.Garrison	9.Gambrel	
2.Ranch	6.Salt Box	10.Other	
3.R Ranch	7.Contemp	11.Split	
4.Cape	8.Log	12.	
Dwelling Units	**1**		
Other Units	**0**		
Stories	**1 One Story**		
1.1	4.1.5	7.	
2.2	5.1.75	8.	
3.3	6.2.5	9.	
Exterior Walls	**2 Vinyl/Aluminum**		
1.Wood	5.Stucco	9.T-111	
2.Vin/Al	6.Brick	10.Other	
3.Compos.	7.Stone	11.	
4.Asbestos	8.Concrete	12.	
Roof Surface	**1 Asphalt Shingles**		
1.Asphalt	4.Composit	7.	
2.Slate	5.Wood	8.	
3.Metal	6.Other	9.	
SF Masonry Trim	**0**		
OPEN-3-CUSTOM	**0**		
OPEN-4-CUSTOM	**0**		
Year Built	**1989**		
Year Remodeled	**0**		
Foundation	**1 Concrete**		
1.Concrete	4.Wood	7.	
2.C Block	5.Slab	8.	
3.Br/Stone	6.Piers	9.	
Basement	**4 Full Basement**		
1.1/4 Bmt	4.Full Bmt	7.	
2.1/2 Bmt	5.None	8.	
3.3/4 Bmt	6.	9.None	
Bsmt Gar # Cars	**0**		
Wet Basement	**1 Dry Basement**		
1.Dry	4.	7.	
2.Damp	5.	8.	
3.Wet	6.	9.	

SF Bsmt Living	**725**		
Fin Bsmt Grade	**3 100**		
OPEN 5 OPTIONAL	**0**		
Heat Type	**100%**	**1 Hot Water BB**	
1.HWBB	5.FWA	9.No Heat	
2.HWCI	6.GravWA	10.	
3.H Pump	7.Electric	11.	
4.Steam	8.Fl/Wall	12.	
Cool Type	**100%**	**3 Heat Pump**	
1.Refrig	4.W&C Air	7.	
2.Evapor	5.	8.	
3.H Pump	6.	9.None	
Kitchen Style	**2 Typical**		
1.Modern	4.Obsolete	7.	
2.Typical	5.	8.	
3.Old Type	6.	9.None	
Bath(s) Style	**2 Typical Bath(s)**		
1.Modern	4.Obsolete	7.	
2.Typical	5.	8.	
3.Old Type	6.	9.None	
# Rooms	**5**		
# Bedrooms	**3**		
# Full Baths	**2**		
# Half Baths	**0**		
# Addn Fixtures	**0**		
# Fireplaces	**0**		

TRIO Software
A Division of Harris Computer Systems

Layout	**1 Typical**		
1.Typical	4.	7.	
2.Inadeq	5.	8.	
3.Poor	6.	9.	
Attic	**9 None**		
1.1/4 Fin	4.Full Fin	7.	
2.1/2 Fin	5.Fl/Stair	8.	
3.3/4 Fin	6.	9.None	
Insulation	**1 Full**		
1.Full	4.Minimal	7.	
2.Heavy	5.Partial	8.	
3.Capped	6.	9.None	
Unfinished %	**0%**		
Grade & Factor	**3 Average 105%**		
1.E Grade	4.B Grade	7.	
2.D Grade	5.A Grade	8.SC Grade	
3.C Grade	6.AA Grade	9.Same	
SQFT (Footprint)	**1450**		
Condition	**6 Good**		
1.Poor	4.Avg	7.V G	
2.Fair	5.Avg+	8.Exc	
3.Avg-	6.Good	9.Same	
Phys. % Good	**0%**		
Funct. % Good	**100%**		
Functional Code	**9 None**		
1.Incomp	4.Delap	7.No Power	
2.O-Built	5.Bsmt	8.LongTerm	
3.Damage	6.Common	9.None	
Econ. % Good	**100%**		
Economic Code	**None**		
0.None	3.No Power	7.	
1.Location	4.Generate	8.	
2.Encroach	9.None	9.	
Entrance Code	**1 Interior Inspect**		
1.Interior	4.Vacant	7.	
2.Refusal	5.Estimate	8.	
3.Informed	6.Reviewed	9.	
Information Code	**1 Owner**		
1.Owner	4.Agent	7.	
2.Relative	5.Estimate	8.	
3.Tenant	6.Other	9.	

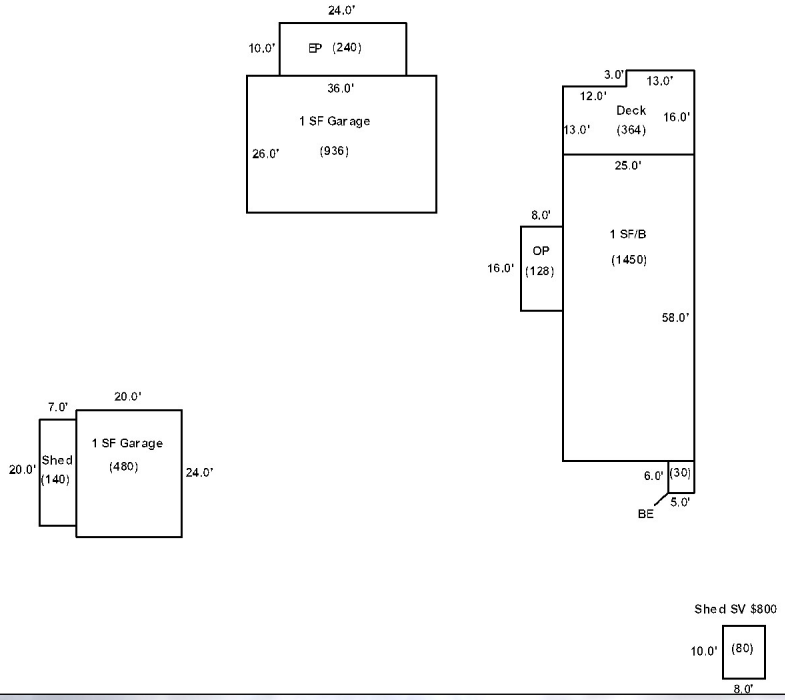

Date Inspected 10/18/2018

Additions, Outbuildings & Improvements

Type	Year	Units	Grade	Cond	Phys.	Funct.	Sound Value
40 Basement Entry	1989	30	9 100	9	0 %	100 %	
21 Open Frame	1990	128	3 95	4	0 %	100 %	
68 Wood Deck	1990	364	2 105	4	0 %	100 %	
23 Frame Garage	1990	936	3 100	4	0 %	100 %	
22 Encl Frame Porch	2000	240	2 105	4	0 %	100 %	
23 Frame Garage	1995	480	3 100	4	0 %	100 %	
24 Frame Shed	2005	140	2 100	4	0 %	80 %	
24 Frame Shed	0				%	%	800
					%	%	
					%	%	

1.One Story Fram
2.Two Story Fram
3.Three Story Fr
4.1 & 1/2 Story
5.1 & 3/4 Story
6.2 & 1/2 Story
21.Open Frame Por
22.Encl Frame Por
23.Frame Garage
24.Frame Shed
25.Frame Bay Wind
26.1SFr Overhang
27.Unfin Basement
28.Unfinished Att
29.Finished Attic

Map Lot 007-030 Account 521 Location 331 EVERETT ROAD Card 1 Of 1 8/23/2023

HUMPHREY, THOMAS W
331 EVERETT RD
WASHBURN ME 04786

B2039P3

Inspection Witnessed By:

X Date

No./Date	Description	Date Insp.

Notes:
*1-3-2019 -15% for size obs. on barn. -20% for attached sheds, -10% for attached shed on side of barn.

Washburn

Property Data

Neighborhood **1 Neighborhood One**

Tree Growth Year **0**

1ST MORTGAGE **0**

2ND MORTGAGE **0**

Zone/Land Use **1 Residential**

Secondary Zone

Topography **2 Rolling**

1.Level	4.Below St	7.LevelBog
2.Rolling	5.Low	8.
3.Above St	6.Swampy	9.

Utilities **4 Drilled Well** **6 Septic System**

1.Public	4.Dr Well	7.Cesspool
2.Water	5.Dug Well	8.
3.Sewer	6.Septic	9.None

Street **1 Paved**

1.Paved	4.Proposed	7.
2.Semi Imp	5.R/O/W	8.
3.Gravel	6.	9.None

TG PLAN YEAR **0**

Tif District # **0**

Sale Data

Sale Date **10/29/1987**

Price

Sale Type **2 Land & Buildings**

1.Land	4.Mobile	7.C/I L&B
2.L & B	5.Other	8.
3.Building	6.C/I Land	9.

Financing

1.Convent	4.Seller	7.
2.FHA/VA	5.Private	8.
3.Assumed	6.Cash	9.Unknown

Validity **2 Related Parties**

1.Valid	4.Split	7.Renovate
2.Related	5.Partial	8.Other
3.Distress	6.Exempt	9.

Verified **5 Public Record**

1.Buyer	4.Agent	7.Family
2.Seller	5.Pub Rec	8.Other
3.Lender	6.MLS	9.

Assessment Record

Year	Land	Buildings	Exempt	Total
2012	19,800	30,000	8,800	41,000
2013	25,700	30,000	8,800	46,900
2015	25,700	30,000	9,000	46,700
2018	25,700	30,000	18,400	37,300
2019	49,600	56,200	20,000	85,800
2020	49,600	56,200	25,000	80,800
2021	49,600	56,200	25,000	80,800
2022	49,600	59,000	25,000	83,600
2023	55,200	70,100	25,000	100,300

Land Data

Front Foot	Type	Effective Frontage	Effective Depth	Influence Factor	Influence Code
11.Regular Lot				%	
12.Delta Triangle				%	
13.Nabla Triangle				%	
14.Rear Land				%	
15.Class I Road				%	
				%	
				%	
Square Foot		**Square Feet**			
16.Class II Road				%	
17.Municipal Rese				%	
18.Munic Sep Lago				%	
19.Gravel Pit				%	
20.Industrial Bas				%	
				%	
				%	
Fract. Acre		**Acreage/Sites**			
21.Developed Pave	21	1.00	100	%	0
22.Undev Paved (F	31	33.00	100	%	0
23.Developed Grav	40	2.00	100	%	0
Acres				%	
24.Undev Gravel (				%	
25.Comm Base Pave				%	
26.Comm Base Grav				%	
27.Backlot				%	
28.Rear Land				%	
29.Pavement				%	

Total Acreage 36.00

Influence Codes

1.Unimproved
2.Excess Frtg
3.Topography
4.Size/Shape
5.Access
6.Restriction
7.Open Space
8.View/Environ
9.Fract Share
Acres
30.Utility R O W
31.Tillable
32.Pasture
33.Orchard
34.Softwood F&O
35.Mixed Wood F&O
36.Hardwood F&O
37.Softwood TG
38.Mixed Wood TG
39.Hardwood TG
40.Wasteland
41.Open Space
42.Mobile Home Si
43.Condo Site
44.Lot Improvemen
45.Subdivision Lo
46.Heavy Ind Sit

Washburn

Map Lot 007-030 | Account 521 | Location 331 EVERETT ROAD | Card 1 Of 1 | 8/23/2023

Building Style	**4 Cape Cod**		
1.Conv.	5.Garrison	9.Gambrel	
2.Ranch	6.Salt Box	10.Other	
3.R Ranch	7.Contemp	11.Split	
4.Cape	8.Log	12.	
Dwelling Units	**1**		
Other Units	**0**		
Stories	**4 One & 1/2 Story**		
1.1	4.1.5	7.	
2.2	5.1.75	8.	
3.3	6.2.5	9.	
Exterior Walls	**2 Vinyl/Aluminum**		
1.Wood	5.Stucco	9.T-111	
2.Vin/Al	6.Brick	10.Other	
3.Compos.	7.Stone	11.	
4.Asbestos	8.Concrete	12.	
Roof Surface	**3 Sheet Metal**		
1.Asphalt	4.Composit	7.	
2.Slate	5.Wood	8.	
3.Metal	6.Other	9.	
SF Masonry Trim	**0**		
OPEN-3-CUSTOM	**0**		
OPEN-4-CUSTOM	**0**		
Year Built	**1930**		
Year Remodeled	**0**		
Foundation	**1 Concrete**		
1.Concrete	4.Wood	7.	
2.C Block	5.Slab	8.	
3.Br/Stone	6.Piers	9.	
Basement	**4 Full Basement**		
1.1/4 Bmt	4.Full Bmt	7.	
2.1/2 Bmt	5.None	8.	
3.3/4 Bmt	6.	9.None	
Bsmt Gar # Cars	**0**		
Wet Basement	**2 Damp Basement**		
1.Dry	4.	7.	
2.Damp	5.	8.	
3.Wet	6.	9.	

SF Bsmt Living	**0**		
Fin Bsmt Grade	**0 0**		
OPEN 5 OPTIONAL	**0**		
Heat Type	**100%**	**5 Forced Warm Air**	
1.HWBB	5.FWA	9.No Heat	
2.HWCI	6.GravWA	10.	
3.H Pump	7.Electric	11.	
4.Steam	8.Fl/Wall	12.	
Cool Type	**0%**	**9 None**	
1.Refrig	4.W&C Air	7.	
2.Evapor	5.	8.	
3.H Pump	6.	9.None	
Kitchen Style	**2 Typical**		
1.Modern	4.Obsolete	7.	
2.Typical	5.	8.	
3.Old Type	6.	9.None	
Bath(s) Style	**2 Typical Bath(s)**		
1.Modern	4.Obsolete	7.	
2.Typical	5.	8.	
3.Old Type	6.	9.None	
# Rooms	**6**		
# Bedrooms	**3**		
# Full Baths	**1**		
# Half Baths	**1**		
# Addn Fixtures	**0**		
# Fireplaces	**0**		

TRIO Software
A Division of Harris Computer Systems

Layout	**1 Typical**		
1.Typical	4.	7.	
2.Inadeq	5.	8.	
3.Poor	6.	9.	
Attic	**9 None**		
1.1/4 Fin	4.Full Fin	7.	
2.1/2 Fin	5.Fl/Stair	8.	
3.3/4 Fin	6.	9.None	
Insulation	**4 Minimal**		
1.Full	4.Minimal	7.	
2.Heavy	5.Partial	8.	
3.Capped	6.	9.None	
Unfinished %	**0%**		
Grade & Factor	**2 Fair 105%**		
1.E Grade	4.B Grade	7.	
2.D Grade	5.A Grade	8.SC Grade	
3.C Grade	6.AA Grade	9.Same	
SQFT (Footprint)	**748**		
Condition	**4 Average**		
1.Poor	4.Avg	7.V G	
2.Fair	5.Avg+	8.Exc	
3.Avg-	6.Good	9.Same	
Phys. % Good	**0%**		
Funct. % Good	**100%**		
Functional Code	**9 None**		
1.Incomp	4.Delap	7.No Power	
2.O-Built	5.Bsmt	8.LongTerm	
3.Damage	6.Common	9.None	
Econ. % Good	**100%**		
Economic Code	**None**		
0.None	3.No Power	7.	
1.Location	4.Generate	8.	
2.Encroach	9.None	9.	
Entrance Code	**5 Estimated**		
1.Interior	4.Vacant	7.	
2.Refusal	5.Estimate	8.	
3.Informed	6.Reviewed	9.	
Information Code	**5 Estimate**		
1.Owner	4.Agent	7.	
2.Relative	5.Estimate	8.	
3.Tenant	6.Other	9.	

Date Inspected 10/18/2018

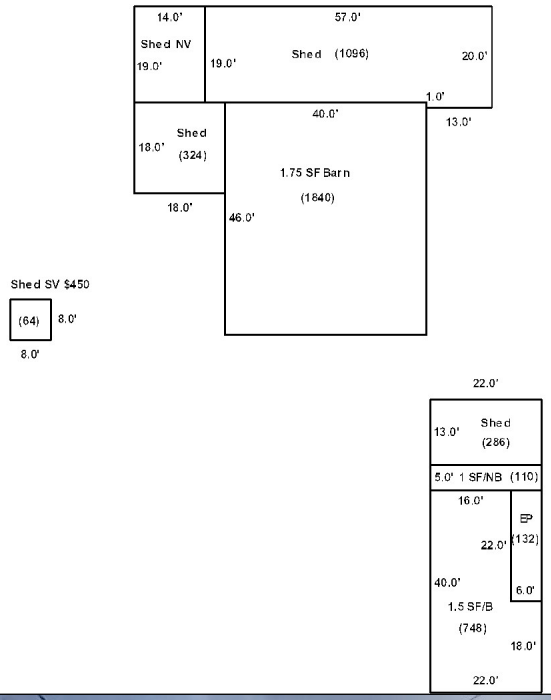

Additions, Outbuildings & Improvements

Type	Year	Units	Grade	Cond	Phys.	Funct.	Sound Value
22 Encl Frame Porch	1950	132	2 105	3	0 %	100 %	
20 1 Story/Bsmt	1950	110	2 105	3	0 %	100 %	
24 Frame Shed	1970	286	2 100	2	0 %	80 %	
116 1.75 Story Barn	1930	1840	2 110	2	0 %	75 %	
24 Frame Shed	1980	324	2 100	2	0 %	80 %	
24 Frame Shed	1950	1096	2 90	2	0 %	75 %	
24 Frame Shed	0				%	%	450
					%	%	
					%	%	
					%	%	

1.One Story Fram
2.Two Story Fram
3.Three Story Fr
4.1 & 1/2 Story
5.1 & 3/4 Story
6.2 & 1/2 Story
21.Open Frame Por
22.Encl Frame Por
23.Frame Garage
24.Frame Shed
25.Frame Bay Wind
26.1SFr Overhang
27.Unfin Basement
28.Unfinished Att
29.Finished Attic

Map Lot 007-031/32 Account 302 Location EVERETT ROAD Card 1 Of 1 8/23/2023

CULBERT, THOMAS
CULBERT, MARGARET
21700 290th Avenue
Holcombe WI 54745

B1154P560

Previous Owner
Culbert, Thomas
Culbert, Margaret
73 Fendall Ave.
Alexandria VA
Sale Date: 3/14/2007

Inspection Witnessed By:

X Date

No./Date	Description	Date Insp.

Notes:

Washburn

Property Data

Neighborhood **1 Neighborhood One**

Tree Growth Year **0**

1ST MORTGAGE **0**

2ND MORTGAGE **0**

Zone/Land Use **1 Residential**

Secondary Zone

Topography **2 Rolling**

1.Level	4.Below St	7.LevelBog
2.Rolling	5.Low	8.
3.Above St	6.Swampy	9.

Utilities

1.Public	4.Dr Well	7.Cesspool
2.Water	5.Dug Well	8.
3.Sewer	6.Septic	9.None

Street **1 Paved**

1.Paved	4.Proposed	7.
2.Semi Imp	5.R/O/W	8.
3.Gravel	6.	9.None

TG PLAN YEAR **0**

Tif District # **0**

Sale Data

Sale Date

Price

Sale Type **1 Land Only**

1.Land	4.Mobile	7.C/I L&B
2.L & B	5.Other	8.
3.Building	6.C/I Land	9.

Financing

1.Convent	4.Seller	7.
2.FHA/VA	5.Private	8.
3.Assumed	6.Cash	9.Unknown

Validity **1 Arms Length Sale**

1.Valid	4.Split	7.Renovate
2.Related	5.Partial	8.Other
3.Distress	6.Exempt	9.

Verified **5 Public Record**

1.Buyer	4.Agent	7.Family
2.Seller	5.Pub Rec	8.Other
3.Lender	6.MLS	9.

Assessment Record

Year	Land	Buildings	Exempt	Total
2012	4,300	0	0	4,300
2013	4,800	0	0	4,800
2015	4,800	0	0	4,800
2018	5,800	0	0	5,800
2019	5,300	0	0	5,300
2020	5,400	0	0	5,400
2021	4,800	0	0	4,800
2022	4,900	0	0	4,900
2023	5,000	0	0	5,000

Land Data

Front Foot	Type	Effective Frontage	Effective Depth	Influence Factor	Influence Code
11.Regular Lot				%	
12.Delta Triangle				%	
13.Nabla Triangle				%	
14.Rear Land				%	
15.Class I Road				%	
				%	
				%	
Square Foot		**Square Feet**			
16.Class II Road				%	
17.Municipal Rese				%	
18.Munic Sep Lago				%	
19.Gravel Pit				%	
20.Industrial Bas				%	
				%	
				%	
Fract. Acre		**Acreage/Sites**			
21.Developed Pave	37	9.20	100	%	0
22.Undev Paved (F	38	23.80	100	%	0
23.Developed Grav	39	2.20	100	%	0
Acres	40	2.80	100	%	0
24.Undev Gravel (				%	
25.Comm Base Pave				%	
26.Comm Base Grav				%	
27.Backlot					
28.Rear Land					
29.Pavement					

Total Acreage 38.00

Influence Codes

1.Unimproved
2.Excess Frtg
3.Topography
4.Size/Shape
5.Access
6.Restriction
7.Open Space
8.View/Environ
9.Fract Share
Acres
30.Utility R O W
31.Tillable
32.Pasture
33.Orchard
34.Softwood F&O
35.Mixed Wood F&O
36.Hardwood F&O
37.Softwood TG
38.Mixed Wood TG
39.Hardwood TG
40.Wasteland
41.Open Space
42.Mobile Home Si
43.Condo Site
44.Lot Improvemen
45.Subdivision Lo
46.Heavy Ind Sit

Washburn

Map Lot 007-031/32 | Account 302 | Location EVERETT ROAD | Card 1 Of 1 | 8/23/2023

Building Style **0**		
1.Conv.	5.Garrison	9.Gambrel
2.Ranch	6.Salt Box	10.Other
3.R Ranch	7.Contemp	11.Split
4.Cape	8.Log	12.
Dwelling Units **0**		
Other Units **0**		
Stories **0**		
1.1	4.1.5	7.
2.2	5.1.75	8.
3.3	6.2.5	9.
Exterior Walls **0**		
1.Wood	5.Stucco	9.T-111
2.Vin/Al	6.Brick	10.Other
3.Compos.	7.Stone	11.
4.Asbestos	8.Concrete	12.
Roof Surface **0**		
1.Asphalt	4.Composit	7.
2.Slate	5.Wood	8.
3.Metal	6.Other	9.
SF Masonry Trim **0**		
OPEN-3-CUSTOM **0**		
OPEN-4-CUSTOM **0**		
Year Built **0**		
Year Remodeled **0**		
Foundation **0**		
1.Concrete	4.Wood	7.
2.C Block	5.Slab	8.
3.Br/Stone	6.Piers	9.
Basement **0**		
1.1/4 Bmt	4.Full Bmt	7.
2.1/2 Bmt	5.None	8.
3.3/4 Bmt	6.	9.None
Bsmt Gar # Cars **0**		
Wet Basement **0**		
1.Dry	4.	7.
2.Damp	5.	8.
3.Wet	6.	9.

SF Bsmt Living **0**		
Fin Bsmt Grade **0 0**		
OPEN 5 OPTIONAL **0**		
Heat Type **100%** **0**		
1.HWBB	5.FWA	9.No Heat
2.HWCI	6.GravWA	10.
3.H Pump	7.Electric	11.
4.Steam	8.Fl/Wall	12.
Cool Type **0%** **9 None**		
1.Refrig	4.W&C Air	7.
2.Evapor	5.	8.
3.H Pump	6.	9.None
Kitchen Style **0**		
1.Modern	4.Obsolete	7.
2.Typical	5.	8.
3.Old Type	6.	9.None
Bath(s) Style **0**		
1.Modern	4.Obsolete	7.
2.Typical	5.	8.
3.Old Type	6.	9.None
# Rooms **0**		
# Bedrooms **0**		
# Full Baths **0**		
# Half Baths **0**		
# Addn Fixtures **0**		
# Fireplaces **0**		

TRIO Software
A Division of Harris Computer Systems

Layout **0**		
1.Typical	4.	7.
2.Inadeq	5.	8.
3.Poor	6.	9.
Attic **0**		
1.1/4 Fin	4.Full Fin	7.
2.1/2 Fin	5.Fl/Stair	8.
3.3/4 Fin	6.	9.None
Insulation **0**		
1.Full	4.Minimal	7.
2.Heavy	5.Partial	8.
3.Capped	6.	9.None
Unfinished % **0%**		
Grade & Factor **0 0%**		
1.E Grade	4.B Grade	7.
2.D Grade	5.A Grade	8.SC Grade
3.C Grade	6.AA Grade	9.Same
SQFT (Footprint) **0**		
Condition **0**		
1.Poor	4.Avg	7.V G
2.Fair	5.Avg+	8.Exc
3.Avg-	6.Good	9.Same
Phys. % Good **0%**		
Funct. % Good **100%**		
Functional Code **9 None**		
1.Incomp	4.Delap	7.No Power
2.O-Built	5.Bsmt	8.LongTerm
3.Damage	6.Common	9.None
Econ. % Good **100%**		
Economic Code **None**		
0.None	3.No Power	7.
1.Location	4.Generate	8.
2.Encroach	9.None	9.
Entrance Code **0**		
1.Interior	4.Vacant	7.
2.Refusal	5.Estimate	8.
3.Informed	6.Reviewed	9.
Information Code **0**		
1.Owner	4.Agent	7.
2.Relative	5.Estimate	8.
3.Tenant	6.Other	9.

Date Inspected

Additions, Outbuildings & Improvements

Type	Year	Units	Grade	Cond	Phys.	Funct.	Sound Value
					%	%	
					%	%	
					%	%	
					%	%	
					%	%	
					%	%	
					%	%	
					%	%	
					%	%	
					%	%	

1.One Story Fram
2.Two Story Fram
3.Three Story Fr
4.1 & 1/2 Story
5.1 & 3/4 Story
6.2 & 1/2 Story
21.Open Frame Por
22.Encl Frame Por
23.Frame Garage
24.Frame Shed
25.Frame Bay Wind
26.1SFr Overhang
27.Unfin Basement
28.Unfinished Att
29.Finished Attic

Map Lot 007-033 | Account 474 | Location 285 EVERETT ROAD | Card 1 Of 1 | 8/23/2023

FLOOD, BYRON S
FLOOD, MARIA A
PO BOX 61
WASHBURN ME 04786

B6095P202

Property Data

Neighborhood **1 Neighborhood One**

Tree Growth Year **0**

1ST MORTGAGE **0**

2ND MORTGAGE **0**

Zone/Land Use **1 Residential**

Secondary Zone

Topography **2 Rolling**

1.Level	4.Below St	7.LevelBog
2.Rolling	5.Low	8.
3.Above St	6.Swampy	9.

Utilities **4 Drilled Well** **6 Septic System**

1.Public	4.Dr Well	7.Cesspool
2.Water	5.Dug Well	8.
3.Sewer	6.Septic	9.None

Street **1 Paved**

1.Paved	4.Proposed	7.
2.Semi Imp	5.R/O/W	8.
3.Gravel	6.	9.None

TG PLAN YEAR **0**

Tif District # **0**

Sale Data

Sale Date **11/16/2020**

Price

Sale Type **2 Land & Buildings**

1.Land	4.Mobile	7.C/I L&B
2.L & B	5.Other	8.
3.Building	6.C/I Land	9.

Financing **9 Unknown**

1.Convent	4.Seller	7.
2.FHA/VA	5.Private	8.
3.Assumed	6.Cash	9.Unknown

Validity **2 Related Parties**

1.Valid	4.Split	7.Renovate
2.Related	5.Partial	8.Other
3.Distress	6.Exempt	9.

Verified **5 Public Record**

1.Buyer	4.Agent	7.Family
2.Seller	5.Pub Rec	8.Other
3.Lender	6.MLS	9.

Assessment Record

Year	Land	Buildings	Exempt	Total
2012	6,900	36,500	8,800	34,600
2013	9,000	36,500	8,800	36,700
2015	9,000	36,500	9,000	36,500
2018	9,000	36,500	18,400	27,100
2019	35,800	49,200	20,000	65,000
2020	35,800	21,100	25,000	31,900
2021	35,800	21,300	25,000	32,100
2022	35,800	22,300	25,000	33,100
2023	42,400	26,400	25,000	43,800

Land Data

Front Foot	Type	Effective Frontage	Effective Depth	Influence Factor	Influence Code
11.Regular Lot				%	
12.Delta Triangle				%	
13.Nabla Triangle				%	
14.Rear Land				%	
15.Class I Road				%	
				%	
				%	
Square Foot		**Square Feet**			
16.Class II Road				%	
17.Municipal Rese				%	
18.Munic Sep Lago				%	
19.Gravel Pit				%	
20.Industrial Bas				%	
				%	
				%	
Fract. Acre		**Acreage/Sites**			
21.Developed Pave	21	1.00	100	%	0
22.Undev Paved (F	28	13.00	100	%	0
23.Developed Grav	31	12.30	100	%	0
Acres	40	8.00	100	%	0
24.Undev Gravel (				%	
25.Comm Base Pave				%	
26.Comm Base Grav				%	
27.Backlot					
28.Rear Land					
29.Pavement					

Total Acreage 34.30

Influence Codes

1.Unimproved
2.Excess Frtg
3.Topography
4.Size/Shape
5.Access
6.Restriction
7.Open Space
8.View/Environ
9.Fract Share
Acres
30.Utility R O W
31.Tillable
32.Pasture
33.Orchard
34.Softwood F&O
35.Mixed Wood F&O
36.Hardwood F&O
37.Softwood TG
38.Mixed Wood TG
39.Hardwood TG
40.Wasteland
41.Open Space
42.Mobile Home Si
43.Condo Site
44.Lot Improvemen
45.Subdivision Lo
46.Heavy Ind Sit

Inspection Witnessed By:

X Date

No./Date	Description	Date Insp.

Notes:

Washburn

Washburn

Map Lot 007-033 | Account 474 | Location 285 EVERETT ROAD | Card 1 Of 1 | 8/23/2023

Building Style		
1.Conv.	5.Garrison	9.Gambrel
2.Ranch	6.Salt Box	10.Other
3.R Ranch	7.Contemp	11.Split
4.Cape	8.Log	12.

Dwelling Units
Other Units

Stories		
1.1	4.1.5	7.
2.2	5.1.75	8.
3.3	6.2.5	9.

Exterior Walls		
1.Wood	5.Stucco	9.T-111
2.Vin/Al	6.Brick	10.Other
3.Compos.	7.Stone	11.
4.Asbestos	8.Concrete	12.

Roof Surface		
1.Asphalt	4.Composit	7.
2.Slate	5.Wood	8.
3.Metal	6.Other	9.

SF Masonry Trim
OPEN-3-CUSTOM
OPEN-4-CUSTOM
Year Built
Year Remodeled

Foundation		
1.Concrete	4.Wood	7.
2.C Block	5.Slab	8.
3.Br/Stone	6.Piers	9.

Basement		
1.1/4 Bmt	4.Full Bmt	7.
2.1/2 Bmt	5.None	8.
3.3/4 Bmt	6.	9.None

Bsmt Gar # Cars

Wet Basement		
1.Dry	4.	7.
2.Damp	5.	8.
3.Wet	6.	9.

SF Bsmt Living
Fin Bsmt Grade
OPEN 5 OPTIONAL

Heat Type **100%**		
1.HWBB	5.FWA	9.No Heat
2.HWCI	6.GravWA	10.
3.H Pump	7.Electric	11.
4.Steam	8.Fl/Wall	12.

Cool Type **0%**		
1.Refrig	4.W&C Air	7.
2.Evapor	5.	8.
3.H Pump	6.	9.None

Kitchen Style		
1.Modern	4.Obsolete	7.
2.Typical	5.	8.
3.Old Type	6.	9.None

Bath(s) Style		
1.Modern	4.Obsolete	7.
2.Typical	5.	8.
3.Old Type	6.	9.None

Rooms
Bedrooms
Full Baths
Half Baths
Addn Fixtures
Fireplaces

TRIO Software
A Division of Harris Computer Systems

Layout		
1.Typical	4.	7.
2.Inadeq	5.	8.
3.Poor	6.	9.

Attic		
1.1/4 Fin	4.Full Fin	7.
2.1/2 Fin	5.Fl/Stair	8.
3.3/4 Fin	6.	9.None

Insulation		
1.Full	4.Minimal	7.
2.Heavy	5.Partial	8.
3.Capped	6.	9.None

Unfinished %

Grade & Factor		
1.E Grade	4.B Grade	7.
2.D Grade	5.A Grade	8.SC Grade
3.C Grade	6.AA Grade	9.Same

SQFT (Footprint)

Condition		
1.Poor	4.Avg	7.V G
2.Fair	5.Avg+	8.Exc
3.Avg-	6.Good	9.Same

Phys. % Good
Funct. % Good

Functional Code		
1.Incomp	4.Delap	7.No Power
2.O-Built	5.Bsmt	8.LongTerm
3.Damage	6.Common	9.None

Econ. % Good

Economic Code		
0.None	3.No Power	7.
1.Location	4.Generate	8.
2.Encroach	9.None	9.

Entrance Code **1 Interior Inspect**		
1.Interior	4.Vacant	7.
2.Refusal	5.Estimate	8.
3.Informed	6.Reviewed	9.

Information Code **1 Owner**		
1.Owner	4.Agent	7.
2.Relative	5.Estimate	8.
3.Tenant	6.Other	9.

Date Inspected 10/18/2018

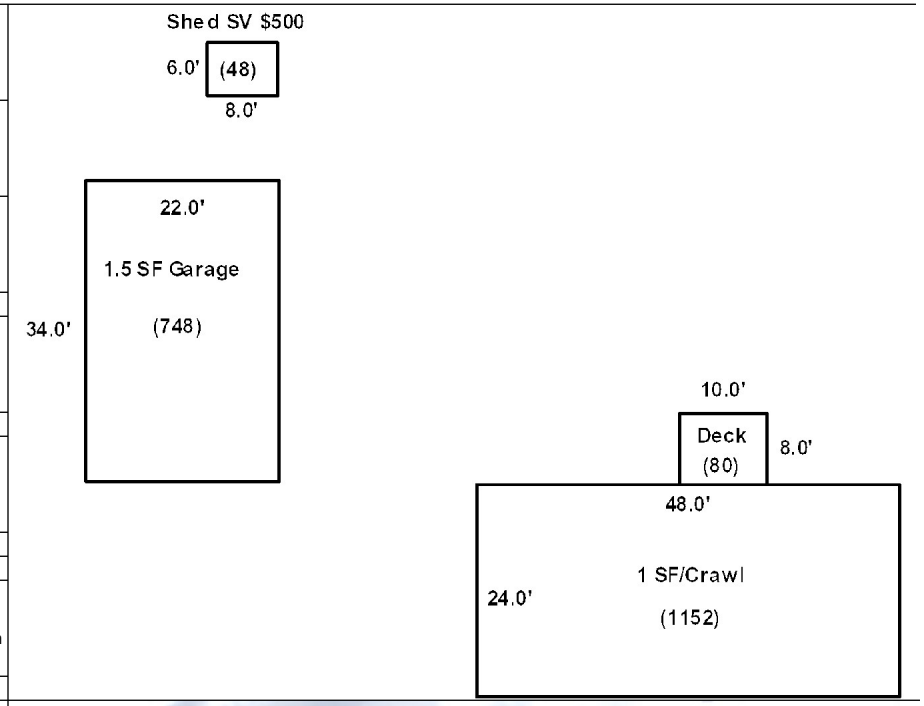

Additions, Outbuildings & Improvements

Type	Year	Units	Grade	Cond	Phys.	Funct.	Sound Value
82 1.5 S-Gar	1995	748	3 90	4	0 %	100 %	
24 Frame Shed	0				%	%	500
68 Wood Deck	1990	80	2 105	3	0 %	100 %	
997 12Mobile Home	1969	12x48	2 100	3	0 %	100 %	
18 1 S-MH add	1990	576	2 100	4	0 %	100 %	
					%	%	
					%	%	
					%	%	
					%	%	
					%	%	

1.One Story Fram
2.Two Story Fram
3.Three Story Fr
4.1 & 1/2 Story
5.1 & 3/4 Story
6.2 & 1/2 Story
21.Open Frame Por
22.Encl Frame Por
23.Frame Garage
24.Frame Shed
25.Frame Bay Wind
26.1SFr Overhang
27.Unfin Basement
28.Unfinished Att
29.Finished Attic

Map Lot 007-033A | Account 418 | Location 265 EVERETT ROAD | Card 1 Of 1 | 8/23/2023

BERTHIAUME, CATHERINE M
DYER, WALTER M
C/O SANDRA SHOAFF
WASHBURN ME 04786

B5575P324 B5575P324 B5608P67

Property Data

Neighborhood	**1 Neighborhood One**
Tree Growth Year	**0**
1ST MORTGAGE	**0**
2ND MORTGAGE	**0**
Zone/Land Use	**1 Residential**
Secondary Zone	
Topography	**1 Level**

1.Level	4.Below St	7.LevelBog
2.Rolling	5.Low	8.
3.Above St	6.Swampy	9.

Utilities **4 Drilled Well** **6 Septic System**

1.Public	4.Dr Well	7.Cesspool
2.Water	5.Dug Well	8.
3.Sewer	6.Septic	9.None

Street **1 Paved**

1.Paved	4.Proposed	7.
2.Semi Imp	5.R/O/W	8.
3.Gravel	6.	9.None

TG PLAN YEAR	**0**
Tif District #	**0**

Sale Data

Sale Date	**10/15/1979**
Price	
Sale Type	**2 Land & Buildings**

1.Land	4.Mobile	7.C/I L&B
2.L & B	5.Other	8.
3.Building	6.C/I Land	9.

Financing **1 Conventional**

1.Convent	4.Seller	7.
2.FHA/VA	5.Private	8.
3.Assumed	6.Cash	9.Unknown

Validity **2 Related Parties**

1.Valid	4.Split	7.Renovate
2.Related	5.Partial	8.Other
3.Distress	6.Exempt	9.

Verified **5 Public Record**

1.Buyer	4.Agent	7.Family
2.Seller	5.Pub Rec	8.Other
3.Lender	6.MLS	9.

Assessment Record

Year	Land	Buildings	Exempt	Total
2012	3,400	18,700	8,800	13,300
2013	4,400	18,700	8,800	14,300
2015	4,400	18,700	9,000	14,100
2018	4,400	18,700	18,400	4,700
2019	16,800	22,700	20,000	19,500
2020	16,800	22,500	25,000	14,300
2021	16,800	22,700	25,000	14,500
2022	16,800	23,800	25,000	15,600
2023	22,300	28,100	0	50,400

Land Data

Front Foot	Type	Effective Frontage	Effective Depth	Influence Factor	Influence Code
11.Regular Lot				%	
12.Delta Triangle				%	
13.Nabla Triangle				%	
14.Rear Land				%	
15.Class I Road				%	
				%	
				%	
Square Foot		**Square Feet**			
16.Class II Road				%	
17.Municipal Rese				%	
18.Munic Sep Lago				%	
19.Gravel Pit				%	
20.Industrial Bas				%	
				%	
				%	
Fract. Acre		**Acreage/Sites**			
21.Developed Pave	21	1.00	100	%	0
22.Undev Paved (F	28	0.50	100	%	0
23.Developed Grav				%	
Acres				%	
24.Undev Gravel (				%	
25.Comm Base Pave				%	
26.Comm Base Grav				%	
27.Backlot				%	
28.Rear Land				%	
29.Pavement				%	

Total Acreage 1.50

Influence Codes

1.Unimproved
2.Excess Frtg
3.Topography
4.Size/Shape
5.Access
6.Restriction
7.Open Space
8.View/Environ
9.Fract Share
Acres
30.Utility R O W
31.Tillable
32.Pasture
33.Orchard
34.Softwood F&O
35.Mixed Wood F&O
36.Hardwood F&O
37.Softwood TG
38.Mixed Wood TG
39.Hardwood TG
40.Wasteland
41.Open Space
42.Mobile Home Si
43.Condo Site
44.Lot Improvemen
45.Subdivision Lo
46.Heavy Ind Sit

Inspection Witnessed By:

X Date

No./Date	Description	Date Insp.

Notes:

Washburn

Washburn

Map Lot 007-033A | Account 418 | Location 265 EVERETT ROAD | Card 1 Of 1 | 8/23/2023

Building Style **0**		
1.Conv.	5.Garrison	9.Gambrel
2.Ranch	6.Salt Box	10.Other
3.R Ranch	7.Contemp	11.Split
4.Cape	8.Log	12.
Dwelling Units **0**		
Other Units **0**		
Stories **0**		
1.1	4.1.5	7.
2.2	5.1.75	8.
3.3	6.2.5	9.
Exterior Walls **0**		
1.Wood	5.Stucco	9.T-111
2.Vin/Al	6.Brick	10.Other
3.Compos.	7.Stone	11.
4.Asbestos	8.Concrete	12.
Roof Surface **0**		
1.Asphalt	4.Composit	7.
2.Slate	5.Wood	8.
3.Metal	6.Other	9.
SF Masonry Trim **0**		
OPEN-3-CUSTOM **0**		
OPEN-4-CUSTOM **0**		
Year Built **0**		
Year Remodeled **0**		
Foundation **0**		
1.Concrete	4.Wood	7.
2.C Block	5.Slab	8.
3.Br/Stone	6.Piers	9.
Basement **0**		
1.1/4 Bmt	4.Full Bmt	7.
2.1/2 Bmt	5.None	8.
3.3/4 Bmt	6.	9.None
Bsmt Gar # Cars **0**		
Wet Basement **0**		
1.Dry	4.	7.
2.Damp	5.	8.
3.Wet	6.	9.

SF Bsmt Living **0**		
Fin Bsmt Grade **0 0**		
OPEN 5 OPTIONAL **0**		
Heat Type **100%** **0**		
1.HWBB	5.FWA	9.No Heat
2.HWCI	6.GravWA	10.
3.H Pump	7.Electric	11.
4.Steam	8.Fl/Wall	12.
Cool Type **0%** **9 None**		
1.Refrig	4.W&C Air	7.
2.Evapor	5.	8.
3.H Pump	6.	9.None
Kitchen Style **0**		
1.Modern	4.Obsolete	7.
2.Typical	5.	8.
3.Old Type	6.	9.None
Bath(s) Style **0**		
1.Modern	4.Obsolete	7.
2.Typical	5.	8.
3.Old Type	6.	9.None
# Rooms **0**		
# Bedrooms **0**		
# Full Baths **0**		
# Half Baths **0**		
# Addn Fixtures **0**		
# Fireplaces **0**		

TRIO Software
A Division of Harris Computer Systems

Layout **0**		
1.Typical	4.	7.
2.Inadeq	5.	8.
3.Poor	6.	9.
Attic **0**		
1.1/4 Fin	4.Full Fin	7.
2.1/2 Fin	5.Fl/Stair	8.
3.3/4 Fin	6.	9.None
Insulation **0**		
1.Full	4.Minimal	7.
2.Heavy	5.Partial	8.
3.Capped	6.	9.None
Unfinished % **0%**		
Grade & Factor **0 0%**		
1.E Grade	4.B Grade	7.
2.D Grade	5.A Grade	8.SC Grade
3.C Grade	6.AA Grade	9.Same
SQFT (Footprint) **0**		
Condition **0**		
1.Poor	4.Avg	7.V G
2.Fair	5.Avg+	8.Exc
3.Avg-	6.Good	9.Same
Phys. % Good **0%**		
Funct. % Good **100%**		
Functional Code **9 None**		
1.Incomp	4.Delap	7.No Power
2.O-Built	5.Bsmt	8.LongTerm
3.Damage	6.Common	9.None
Econ. % Good **100%**		
Economic Code **None**		
0.None	3.No Power	7.
1.Location	4.Generate	8.
2.Encroach	9.None	9.
Entrance Code **1 Interior Inspect**		
1.Interior	4.Vacant	7.
2.Refusal	5.Estimate	8.
3.Informed	6.Reviewed	9.
Information Code **1 Owner**		
1.Owner	4.Agent	7.
2.Relative	5.Estimate	8.
3.Tenant	6.Other	9.

Date Inspected 10/18/2018

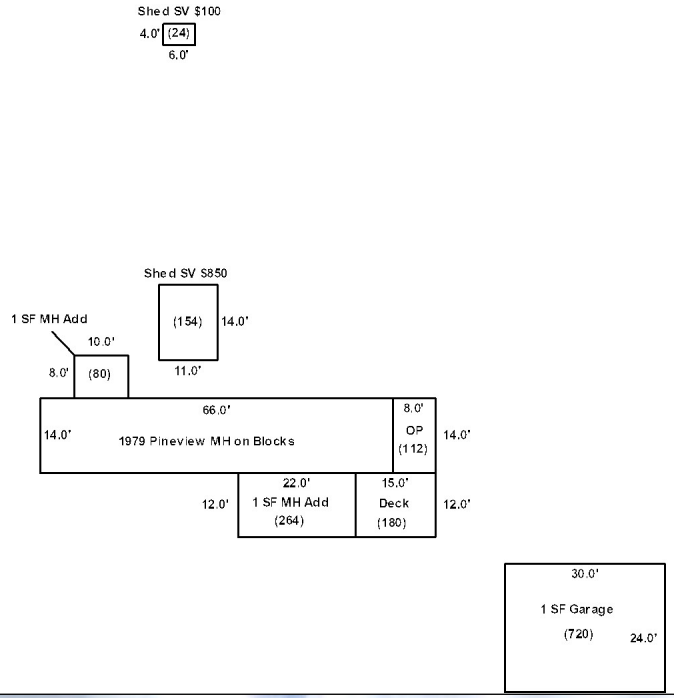

Additions, Outbuildings & Improvements

Type	Year	Units	Grade	Cond	Phys.	Funct.	Sound Value
998 14Mobile Home	1979	14x66	4 100	4	0 %	100 %	
18 1 S-MH add	2003	264	2 110	3	0 %	100 %	
68 Wood Deck	2000	180	2 105	3	0 %	100 %	
21 Open Frame	2000	112	2 100	2	0 %	100 %	
18 1 S-MH add	2000	80	2 105	3	0 %	100 %	
24 Frame Shed	0				%	%	850
24 Frame Shed	0				%	%	100
23 Frame Garage	1986	720	3 100	4	0 %	100 %	
					%	%	
					%	%	

1.One Story Fram
2.Two Story Fram
3.Three Story Fr
4.1 & 1/2 Story
5.1 & 3/4 Story
6.2 & 1/2 Story
21.Open Frame Por
22.Encl Frame Por
23.Frame Garage
24.Frame Shed
25.Frame Bay Wind
26.1SFr Overhang
27.Unfin Basement
28.Unfinished Att
29.Finished Attic

Map Lot 007-033B | Account 791 | Location 257 EVERETT ROAD | Card 1 Of 1 | 8/23/2023

OLSON, MARK P
PO BOX 532
WASHBURN ME 04786

B3323P204 B3323P205 B3694P28

Property Data

Neighborhood **1 Neighborhood One**

Tree Growth Year **0**

1ST MORTGAGE **0**

2ND MORTGAGE **0**

Zone/Land Use **1 Residential**

Secondary Zone

Topography **1 Level**

1.Level	4.Below St	7.LevelBog
2.Rolling	5.Low	8.
3.Above St	6.Swampy	9.

Utilities **4 Drilled Well** **6 Septic System**

1.Public	4.Dr Well	7.Cesspool
2.Water	5.Dug Well	8.
3.Sewer	6.Septic	9.None

Street **1 Paved**

1.Paved	4.Proposed	7.
2.Semi Imp	5.R/O/W	8.
3.Gravel	6.	9.None

TG PLAN YEAR **0**

Tif District # **0**

Sale Data

Sale Date **8/30/1988**

Price **3,000**

Sale Type **2 Land & Buildings**

1.Land	4.Mobile	7.C/I L&B
2.L & B	5.Other	8.
3.Building	6.C/I Land	9.

Financing

1.Convent	4.Seller	7.
2.FHA/VA	5.Private	8.
3.Assumed	6.Cash	9.Unknown

Validity **1 Arms Length Sale**

1.Valid	4.Split	7.Renovate
2.Related	5.Partial	8.Other
3.Distress	6.Exempt	9.

Verified **5 Public Record**

1.Buyer	4.Agent	7.Family
2.Seller	5.Pub Rec	8.Other
3.Lender	6.MLS	9.

Assessment Record

Year	Land	Buildings	Exempt	Total
2012	4,200	19,600	8,800	15,000
2013	5,400	19,600	8,800	16,200
2015	5,400	19,600	9,000	16,000
2018	5,400	19,600	18,400	6,600
2019	18,400	24,200	20,000	22,600
2020	18,400	24,100	25,000	17,500
2021	18,400	24,200	25,000	17,600
2022	18,400	25,100	25,000	18,500
2023	24,100	28,900	25,000	28,000

Land Data

Front Foot	Type	Effective Frontage	Effective Depth	Influence Factor	Influence Code
11.Regular Lot				%	
12.Delta Triangle				%	
13.Nabla Triangle				%	
14.Rear Land				%	
15.Class I Road				%	
				%	
				%	
Square Foot		**Square Feet**			
16.Class II Road				%	
17.Municipal Rese				%	
18.Munic Sep Lago				%	
19.Gravel Pit				%	
20.Industrial Bas				%	
				%	
				%	
Fract. Acre		**Acreage/Sites**			
21.Developed Pave	21	1.00	100	%	0
22.Undev Paved (F	28	3.70	100	%	0
23.Developed Grav				%	
Acres				%	
24.Undev Gravel (				%	
25.Comm Base Pave				%	
26.Comm Base Grav				%	
27.Backlot				%	
28.Rear Land				%	
29.Pavement				%	

Total Acreage 4.70

Influence Codes

1.Unimproved
2.Excess Frtg
3.Topography
4.Size/Shape
5.Access
6.Restriction
7.Open Space
8.View/Environ
9.Fract Share
Acres
30.Utility R O W
31.Tillable
32.Pasture
33.Orchard
34.Softwood F&O
35.Mixed Wood F&O
36.Hardwood F&O
37.Softwood TG
38.Mixed Wood TG
39.Hardwood TG
40.Wasteland
41.Open Space
42.Mobile Home Si
43.Condo Site
44.Lot Improvemen
45.Subdivision Lo
46.Heavy Ind Sit

Inspection Witnessed By:

X Date

No./Date	Description	Date Insp.

Notes:
*5-8-2019 -20% for attached shed.

Washburn

Washburn

Map Lot 007-033B | Account 791 | Location 257 EVERETT ROAD | Card 1 Of 1 | 8/23/2023

Building Style **0**		
1.Conv.	5.Garrison	9.Gambrel
2.Ranch	6.Salt Box	10.Other
3.R Ranch	7.Contemp	11.Split
4.Cape	8.Log	12.
Dwelling Units **0**		
Other Units **0**		
Stories **0**		
1.1	4.1.5	7.
2.2	5.1.75	8.
3.3	6.2.5	9.
Exterior Walls **0**		
1.Wood	5.Stucco	9.T-111
2.Vin/Al	6.Brick	10.Other
3.Compos.	7.Stone	11.
4.Asbestos	8.Concrete	12.
Roof Surface **0**		
1.Asphalt	4.Composit	7.
2.Slate	5.Wood	8.
3.Metal	6.Other	9.
SF Masonry Trim **0**		
OPEN-3-CUSTOM **0**		
OPEN-4-CUSTOM **0**		
Year Built **0**		
Year Remodeled **0**		
Foundation **0**		
1.Concrete	4.Wood	7.
2.C Block	5.Slab	8.
3.Br/Stone	6.Piers	9.
Basement **0**		
1.1/4 Bmt	4.Full Bmt	7.
2.1/2 Bmt	5.None	8.
3.3/4 Bmt	6.	9.None
Bsmt Gar # Cars **0**		
Wet Basement **0**		
1.Dry	4.	7.
2.Damp	5.	8.
3.Wet	6.	9.

SF Bsmt Living **0**		
Fin Bsmt Grade **0 0**		
OPEN 5 OPTIONAL **0**		
Heat Type **100%** **0**		
1.HWBB	5.FWA	9.No Heat
2.HWCI	6.GravWA	10.
3.H Pump	7.Electric	11.
4.Steam	8.Fl/Wall	12.
Cool Type **0%** **9 None**		
1.Refrig	4.W&C Air	7.
2.Evapor	5.	8.
3.H Pump	6.	9.None
Kitchen Style **0**		
1.Modern	4.Obsolete	7.
2.Typical	5.	8.
3.Old Type	6.	9.None
Bath(s) Style **0**		
1.Modern	4.Obsolete	7.
2.Typical	5.	8.
3.Old Type	6.	9.None
# Rooms **0**		
# Bedrooms **0**		
# Full Baths **0**		
# Half Baths **0**		
# Addn Fixtures **0**		
# Fireplaces **0**		

TRIO Software
A Division of Harris Computer Systems

Layout **0**		
1.Typical	4.	7.
2.Inadeq	5.	8.
3.Poor	6.	9.
Attic **0**		
1.1/4 Fin	4.Full Fin	7.
2.1/2 Fin	5.Fl/Stair	8.
3.3/4 Fin	6.	9.None
Insulation **0**		
1.Full	4.Minimal	7.
2.Heavy	5.Partial	8.
3.Capped	6.	9.None
Unfinished % **0%**		
Grade & Factor **0 0%**		
1.E Grade	4.B Grade	7.
2.D Grade	5.A Grade	8.SC Grade
3.C Grade	6.AA Grade	9.Same
SQFT (Footprint) **0**		
Condition **0**		
1.Poor	4.Avg	7.V G
2.Fair	5.Avg+	8.Exc
3.Avg-	6.Good	9.Same
Phys. % Good **0%**		
Funct. % Good **100%**		
Functional Code **9 None**		
1.Incomp	4.Delap	7.No Power
2.O-Built	5.Bsmt	8.LongTerm
3.Damage	6.Common	9.None
Econ. % Good **100%**		
Economic Code **None**		
0.None	3.No Power	7.
1.Location	4.Generate	8.
2.Encroach	9.None	9.
Entrance Code **3 Information Only**		
1.Interior	4.Vacant	7.
2.Refusal	5.Estimate	8.
3.Informed	6.Reviewed	9.
Information Code **1 Owner**		
1.Owner	4.Agent	7.
2.Relative	5.Estimate	8.
3.Tenant	6.Other	9.

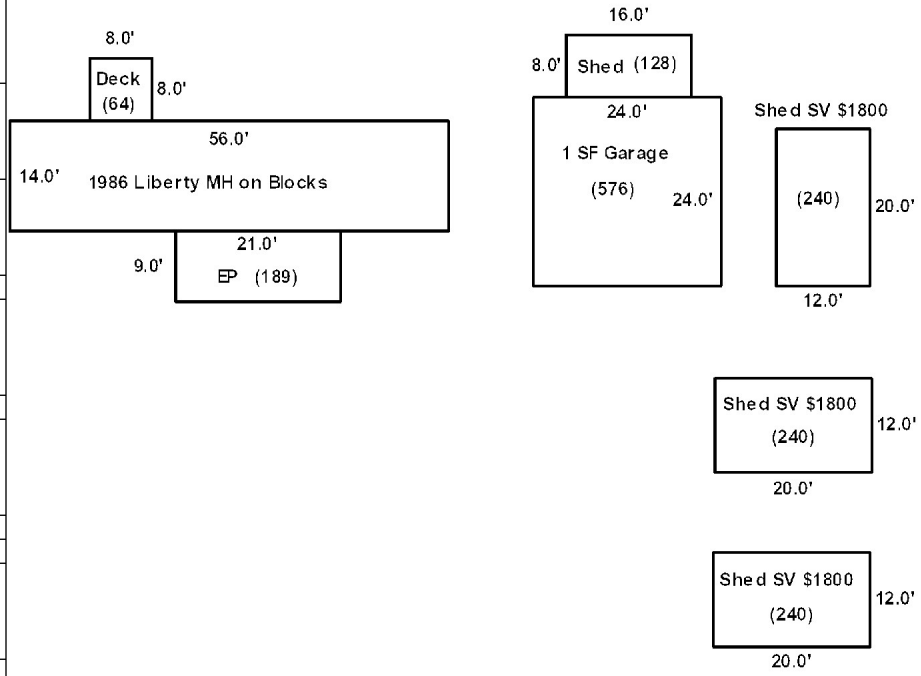

Date Inspected 10/18/2018

Additions, Outbuildings & Improvements

Type	Year	Units	Grade	Cond	Phys.	Funct.	Sound Value
842 Liberty M/H	1986	14x56	4 100	4	0 %	100 %	
22 Encl Frame Porch	1995	189	2 105	3	0 %	100 %	
68 Wood Deck	1990	64	2 100	3	0 %	100 %	
23 Frame Garage	1985	576	3 100	4	0 %	100 %	
24 Frame Shed	2000	128	2 100	4	0 %	80 %	
24 Frame Shed	0				%	%	1,800
24 Frame Shed	0				%	%	1,800
24 Frame Shed	0				%	%	1,800
					%	%	
					%	%	

1.One Story Fram
2.Two Story Fram
3.Three Story Fr
4.1 & 1/2 Story
5.1 & 3/4 Story
6.2 & 1/2 Story
21.Open Frame Por
22.Encl Frame Por
23.Frame Garage
24.Frame Shed
25.Frame Bay Wind
26.1SFr Overhang
27.Unfin Basement
28.Unfinished Att
29.Finished Attic

Map Lot 007-033C | Account 752 | Location 273 EVERETT ROAD | Card 1 Of 1 | 8/23/2023

McNEAL, CRAIG
HATHAWAY, EUGENE
P.O. BOX 564
WASHBURN ME 04786

B4954P102

Inspection Witnessed By:

X Date

No./Date	Description	Date Insp.

Notes:

Washburn

Property Data

Neighborhood **1 Neighborhood One**

Tree Growth Year **0**

1ST MORTGAGE **0**

2ND MORTGAGE **0**

Zone/Land Use **1 Residential**

Secondary Zone

Topography **1 Level**

1.Level	4.Below St	7.LevelBog
2.Rolling	5.Low	8.
3.Above St	6.Swampy	9.

Utilities **4 Drilled Well** **6 Septic System**

1.Public	4.Dr Well	7.Cesspool
2.Water	5.Dug Well	8.
3.Sewer	6.Septic	9.None

Street **1 Paved**

1.Paved	4.Proposed	7.
2.Semi Imp	5.R/O/W	8.
3.Gravel	6.	9.None

TG PLAN YEAR **0**

Tif District # **0**

Sale Data

Sale Date **6/30/2011**

Price

Sale Type **2 Land & Buildings**

1.Land	4.Mobile	7.C/I L&B
2.L & B	5.Other	8.
3.Building	6.C/I Land	9.

Financing

1.Convent	4.Seller	7.
2.FHA/VA	5.Private	8.
3.Assumed	6.Cash	9.Unknown

Validity **1 Arms Length Sale**

1.Valid	4.Split	7.Renovate
2.Related	5.Partial	8.Other
3.Distress	6.Exempt	9.

Verified **5 Public Record**

1.Buyer	4.Agent	7.Family
2.Seller	5.Pub Rec	8.Other
3.Lender	6.MLS	9.

Assessment Record

Year	Land	Buildings	Exempt	Total
2012	3,400	24,600	8,800	19,200
2013	4,400	24,600	8,800	20,200
2015	4,400	24,600	9,000	20,000
2018	4,400	28,000	18,400	14,000
2019	16,800	18,500	20,000	15,300
2020	16,800	18,400	25,000	10,200
2021	16,800	18,500	25,000	10,300
2022	16,800	19,400	25,000	11,200
2023	22,300	22,900	25,000	20,200

Land Data

Front Foot	Type	Effective Frontage	Effective Depth	Influence Factor	Influence Code
11.Regular Lot				%	
12.Delta Triangle				%	
13.Nabla Triangle				%	
14.Rear Land				%	
15.Class I Road				%	
				%	
				%	
Square Foot		**Square Feet**			
16.Class II Road				%	
17.Municipal Rese				%	
18.Munic Sep Lago				%	
19.Gravel Pit				%	
20.Industrial Bas				%	
				%	
				%	
Fract. Acre		**Acreage/Sites**			
21.Developed Pave	21	1.00	100	%	0
22.Undev Paved (F	28	0.50	100	%	0
23.Developed Grav				%	
Acres				%	
24.Undev Gravel (				%	
25.Comm Base Pave				%	
26.Comm Base Grav				%	
27.Backlot				%	
28.Rear Land				%	
29.Pavement				%	

Total Acreage 1.50

Influence Codes

1.Unimproved
2.Excess Frtg
3.Topography
4.Size/Shape
5.Access
6.Restriction
7.Open Space
8.View/Environ
9.Fract Share
Acres
30.Utility R O W
31.Tillable
32.Pasture
33.Orchard
34.Softwood F&O
35.Mixed Wood F&O
36.Hardwood F&O
37.Softwood TG
38.Mixed Wood TG
39.Hardwood TG
40.Wasteland
41.Open Space
42.Mobile Home Si
43.Condo Site
44.Lot Improvemen
45.Subdivision Lo
46.Heavy Ind Sit

Washburn

Map Lot 007-033C | Account 752 | Location 273 EVERETT ROAD | Card 1 Of 1 | 8/23/2023

Building Style **0**		
1.Conv.	5.Garrison	9.Gambrel
2.Ranch	6.Salt Box	10.Other
3.R Ranch	7.Contemp	11.Split
4.Cape	8.Log	12.
Dwelling Units **0**		
Other Units **0**		
Stories **0**		
1.1	4.1.5	7.
2.2	5.1.75	8.
3.3	6.2.5	9.
Exterior Walls **0**		
1.Wood	5.Stucco	9.T-111
2.Vin/Al	6.Brick	10.Other
3.Compos.	7.Stone	11.
4.Asbestos	8.Concrete	12.
Roof Surface **0**		
1.Asphalt	4.Composit	7.
2.Slate	5.Wood	8.
3.Metal	6.Other	9.
SF Masonry Trim **0**		
OPEN-3-CUSTOM **0**		
OPEN-4-CUSTOM **0**		
Year Built **0**		
Year Remodeled **0**		
Foundation **0**		
1.Concrete	4.Wood	7.
2.C Block	5.Slab	8.
3.Br/Stone	6.Piers	9.
Basement **0**		
1.1/4 Bmt	4.Full Bmt	7.
2.1/2 Bmt	5.None	8.
3.3/4 Bmt	6.	9.None
Bsmt Gar # Cars **0**		
Wet Basement **0**		
1.Dry	4.	7.
2.Damp	5.	8.
3.Wet	6.	9.

SF Bsmt Living **0**		
Fin Bsmt Grade **0 0**		
OPEN 5 OPTIONAL **0**		
Heat Type **100%** **0**		
1.HWBB	5.FWA	9.No Heat
2.HWCI	6.GravWA	10.
3.H Pump	7.Electric	11.
4.Steam	8.Fl/Wall	12.
Cool Type **0%** **9 None**		
1.Refrig	4.W&C Air	7.
2.Evapor	5.	8.
3.H Pump	6.	9.None
Kitchen Style **0**		
1.Modern	4.Obsolete	7.
2.Typical	5.	8.
3.Old Type	6.	9.None
Bath(s) Style **0**		
1.Modern	4.Obsolete	7.
2.Typical	5.	8.
3.Old Type	6.	9.None
# Rooms **0**		
# Bedrooms **0**		
# Full Baths **0**		
# Half Baths **0**		
# Addn Fixtures **0**		
# Fireplaces **0**		

TRIO Software
A Division of Harris Computer Systems

Layout **0**		
1.Typical	4.	7.
2.Inadeq	5.	8.
3.Poor	6.	9.
Attic **0**		
1.1/4 Fin	4.Full Fin	7.
2.1/2 Fin	5.Fl/Stair	8.
3.3/4 Fin	6.	9.None
Insulation **0**		
1.Full	4.Minimal	7.
2.Heavy	5.Partial	8.
3.Capped	6.	9.None
Unfinished % **0%**		
Grade & Factor **0 0%**		
1.E Grade	4.B Grade	7.
2.D Grade	5.A Grade	8.SC Grade
3.C Grade	6.AA Grade	9.Same
SQFT (Footprint) **0**		
Condition **0**		
1.Poor	4.Avg	7.V G
2.Fair	5.Avg+	8.Exc
3.Avg-	6.Good	9.Same
Phys. % Good **0%**		
Funct. % Good **100%**		
Functional Code **9 None**		
1.Incomp	4.Delap	7.No Power
2.O-Built	5.Bsmt	8.LongTerm
3.Damage	6.Common	9.None
Econ. % Good **100%**		
Economic Code **None**		
0.None	3.No Power	7.
1.Location	4.Generate	8.
2.Encroach	9.None	9.
Entrance Code **1 Interior Inspect**		
1.Interior	4.Vacant	7.
2.Refusal	5.Estimate	8.
3.Informed	6.Reviewed	9.
Information Code **1 Owner**		
1.Owner	4.Agent	7.
2.Relative	5.Estimate	8.
3.Tenant	6.Other	9.

Date Inspected 5/01/2019

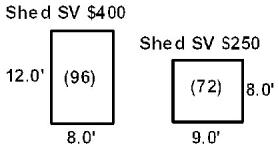

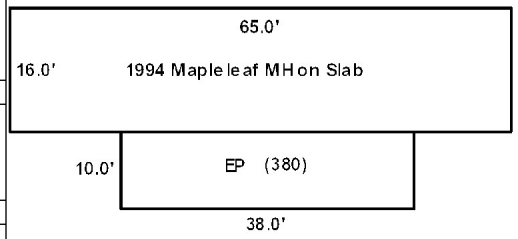

Additions, Outbuildings & Improvements

Type	Year	Units	Grade	Cond	Phys.	Funct.	Sound Value
847 Maple Leaf	1994	16x65	5 100	4	0 %	100 %	
22 Encl Frame Porch	2016	380	2 100	3	0 %	100 %	
24 Frame Shed	0				%	%	400
24 Frame Shed	0				%	%	250
48 Concrete Slab	1994	1040	3 100	4	0 %	100 %	
					%	%	
					%	%	
					%	%	
					%	%	
					%	%	

1.One Story Fram
2.Two Story Fram
3.Three Story Fr
4.1 & 1/2 Story
5.1 & 3/4 Story
6.2 & 1/2 Story
21.Open Frame Por
22.Encl Frame Por
23.Frame Garage
24.Frame Shed
25.Frame Bay Wind
26.1SFr Overhang
27.Unfin Basement
28.Unfinished Att
29.Finished Attic

Map Lot 007-034 Account 475 Location EVERETT ROAD Card 1 Of 1 8/23/2023

FLOOD, BYRON S
PO BOX 61
WASHBURN ME 04786

B2499P235 B4793P226

Inspection Witnessed By:

X Date

No./Date	Description	Date Insp.

Notes:
* No road access, excess rates only

Washburn

Property Data

Neighborhood **1 Neighborhood One**

Tree Growth Year **0**

1ST MORTGAGE **0**

2ND MORTGAGE **0**

Zone/Land Use **1 Residential**

Secondary Zone

Topography **2 Rolling**

1.Level 4.Below St 7.LevelBog
2.Rolling 5.Low 8.
3.Above St 6.Swampy 9.

Utilities

1.Public 4.Dr Well 7.Cesspool
2.Water 5.Dug Well 8.
3.Sewer 6.Septic 9.None

Street **1 Paved**

1.Paved 4.Proposed 7.
2.Semi Imp 5.R/O/W 8.
3.Gravel 6. 9.None

TG PLAN YEAR **0**

Tif District # **0**

Sale Data

Sale Date **6/12/1990**

Price

Sale Type **1 Land Only**

1.Land 4.Mobile 7.C/I L&B
2.L & B 5.Other 8.
3.Building 6.C/I Land 9.

Financing **1 Conventional**

1.Convent 4.Seller 7.
2.FHA/VA 5.Private 8.
3.Assumed 6.Cash 9.Unknown

Validity **1 Arms Length Sale**

1.Valid 4.Split 7.Renovate
2.Related 5.Partial 8.Other
3.Distress 6.Exempt 9.

Verified **5 Public Record**

1.Buyer 4.Agent 7.Family
2.Seller 5.Pub Rec 8.Other
3.Lender 6.MLS 9.

Assessment Record

Year	Land	Buildings	Exempt	Total
2012	6,800	0	0	6,800
2013	8,800	0	0	8,800
2015	8,800	0	0	8,800
2018	8,800	0	0	8,800
2019	13,300	0	0	13,300
2020	13,300	0	0	13,300
2021	13,300	0	0	13,300
2022	13,300	0	0	13,300
2023	15,500	0	0	15,500

Land Data

Front Foot

11.Regular Lot
12.Delta Triangle
13.Nabla Triangle
14.Rear Land
15.Class I Road

Square Foot

16.Class II Road
17.Municipal Rese
18.Munic Sep Lago
19.Gravel Pit
20.Industrial Bas

Fract. Acre

21.Developed Pave
22.Undev Paved (F
23.Developed Grav

Acres

24.Undev Gravel (
25.Comm Base Pave
26.Comm Base Grav
27.Backlot
28.Rear Land
29.Pavement

Type	Effective Frontage	Effective Depth	Influence Factor	Influence Code
			%	
			%	
			%	
			%	
			%	
			%	
			%	
	Square Feet			
			%	
			%	
			%	
			%	
			%	
			%	
			%	
	Acreage/Sites			
28	26.00		100 %	0
40	5.00		100 %	0
			%	
			%	
			%	
			%	
			%	

Total Acreage 31.00

Influence Codes

1.Unimproved
2.Excess Frtg
3.Topography
4.Size/Shape
5.Access
6.Restriction
7.Open Space
8.View/Environ
9.Fract Share

Acres

30.Utility R O W
31.Tillable
32.Pasture
33.Orchard
34.Softwood F&O
35.Mixed Wood F&O
36.Hardwood F&O
37.Softwood TG
38.Mixed Wood TG
39.Hardwood TG
40.Wasteland
41.Open Space
42.Mobile Home Si
43.Condo Site
44.Lot Improvemen
45.Subdivision Lo
46.Heavy Ind Sit

Washburn

Map Lot 007-034 | Account 475 | Location EVERETT ROAD | Card 1 Of 1 | 8/23/2023

Building Style **0**		
1.Conv.	5.Garrison	9.Gambrel
2.Ranch	6.Salt Box	10.Other
3.R Ranch	7.Contemp	11.Split
4.Cape	8.Log	12.
Dwelling Units **0**		
Other Units **0**		
Stories **0**		
1.1	4.1.5	7.
2.2	5.1.75	8.
3.3	6.2.5	9.
Exterior Walls **0**		
1.Wood	5.Stucco	9.T-111
2.Vin/Al	6.Brick	10.Other
3.Compos.	7.Stone	11.
4.Asbestos	8.Concrete	12.
Roof Surface **0**		
1.Asphalt	4.Composit	7.
2.Slate	5.Wood	8.
3.Metal	6.Other	9.
SF Masonry Trim **0**		
OPEN-3-CUSTOM **0**		
OPEN-4-CUSTOM **0**		
Year Built **0**		
Year Remodeled **0**		
Foundation **0**		
1.Concrete	4.Wood	7.
2.C Block	5.Slab	8.
3.Br/Stone	6.Piers	9.
Basement **0**		
1.1/4 Bmt	4.Full Bmt	7.
2.1/2 Bmt	5.None	8.
3.3/4 Bmt	6.	9.None
Bsmt Gar # Cars **0**		
Wet Basement **0**		
1.Dry	4.	7.
2.Damp	5.	8.
3.Wet	6.	9.

SF Bsmt Living **0**		
Fin Bsmt Grade **0 0**		
OPEN 5 OPTIONAL **0**		
Heat Type **100%** **0**		
1.HWBB	5.FWA	9.No Heat
2.HWCI	6.GravWA	10.
3.H Pump	7.Electric	11.
4.Steam	8.Fl/Wall	12.
Cool Type **0%** **9 None**		
1.Refrig	4.W&C Air	7.
2.Evapor	5.	8.
3.H Pump	6.	9.None
Kitchen Style **0**		
1.Modern	4.Obsolete	7.
2.Typical	5.	8.
3.Old Type	6.	9.None
Bath(s) Style **0**		
1.Modern	4.Obsolete	7.
2.Typical	5.	8.
3.Old Type	6.	9.None
# Rooms **0**		
# Bedrooms **0**		
# Full Baths **0**		
# Half Baths **0**		
# Addn Fixtures **0**		
# Fireplaces **0**		

TRIO Software
A Division of Harris Computer Systems

Layout **0**		
1.Typical	4.	7.
2.Inadeq	5.	8.
3.Poor	6.	9.
Attic **0**		
1.1/4 Fin	4.Full Fin	7.
2.1/2 Fin	5.Fl/Stair	8.
3.3/4 Fin	6.	9.None
Insulation **0**		
1.Full	4.Minimal	7.
2.Heavy	5.Partial	8.
3.Capped	6.	9.None
Unfinished % **0%**		
Grade & Factor **0 0%**		
1.E Grade	4.B Grade	7.
2.D Grade	5.A Grade	8.SC Grade
3.C Grade	6.AA Grade	9.Same
SQFT (Footprint) **0**		
Condition **0**		
1.Poor	4.Avg	7.V G
2.Fair	5.Avg+	8.Exc
3.Avg-	6.Good	9.Same
Phys. % Good **0%**		
Funct. % Good **100%**		
Functional Code **9 None**		
1.Incomp	4.Delap	7.No Power
2.O-Built	5.Bsmt	8.LongTerm
3.Damage	6.Common	9.None
Econ. % Good **100%**		
Economic Code **None**		
0.None	3.No Power	7.
1.Location	4.Generate	8.
2.Encroach	9.None	9.
Entrance Code **0**		
1.Interior	4.Vacant	7.
2.Refusal	5.Estimate	8.
3.Informed	6.Reviewed	9.
Information Code **0**		
1.Owner	4.Agent	7.
2.Relative	5.Estimate	8.
3.Tenant	6.Other	9.

Date Inspected

Additions, Outbuildings & Improvements

Type	Year	Units	Grade	Cond	Phys.	Funct.	Sound Value
					%	%	
					%	%	
					%	%	
					%	%	
					%	%	
					%	%	
					%	%	
					%	%	
					%	%	
					%	%	

1.One Story Fram
2.Two Story Fram
3.Three Story Fr
4.1 & 1/2 Story
5.1 & 3/4 Story
6.2 & 1/2 Story
21.Open Frame Por
22.Encl Frame Por
23.Frame Garage
24.Frame Shed
25.Frame Bay Wind
26.1SFr Overhang
27.Unfin Basement
28.Unfinished Att
29.Finished Attic

Map Lot 007-035 Account 36 Location EVERETT ROAD Card 1 Of 1 8/23/2023

BRAGG, LINDA A
PO BOX 503
WASHBURN ME 04786

B2039P4

Property Data

Neighborhood **1 Neighborhood One**

Tree Growth Year **0**

1ST MORTGAGE **0**

2ND MORTGAGE **0**

Zone/Land Use **1 Residential**

Secondary Zone

Topography **2 Rolling**

1.Level	4.Below St	7.LevelBog
2.Rolling	5.Low	8.
3.Above St	6.Swampy	9.

Utilities

1.Public	4.Dr Well	7.Cesspool
2.Water	5.Dug Well	8.
3.Sewer	6.Septic	9.None

Street **1 Paved**

1.Paved	4.Proposed	7.
2.Semi Imp	5.R/O/W	8.
3.Gravel	6.	9.None

TG PLAN YEAR **0**

Tif District # **0**

Sale Data

Sale Date **10/29/1987**

Price

Sale Type **1 Land Only**

1.Land	4.Mobile	7.C/I L&B
2.L & B	5.Other	8.
3.Building	6.C/I Land	9.

Financing

1.Convent	4.Seller	7.
2.FHA/VA	5.Private	8.
3.Assumed	6.Cash	9.Unknown

Validity **1 Arms Length Sale**

1.Valid	4.Split	7.Renovate
2.Related	5.Partial	8.Other
3.Distress	6.Exempt	9.

Verified **5 Public Record**

1.Buyer	4.Agent	7.Family
2.Seller	5.Pub Rec	8.Other
3.Lender	6.MLS	9.

Assessment Record

Year	Land	Buildings	Exempt	Total
2012	12,400	0	0	12,400
2013	16,100	0	0	16,100
2015	16,100	0	0	16,100
2018	16,100	0	0	16,100
2019	37,000	0	0	37,000
2020	37,000	0	0	37,000
2021	37,000	0	0	37,000
2022	37,000	0	0	37,000
2023	40,500	0	0	40,500

Land Data

Front Foot	Type	Effective Frontage	Effective Depth	Influence Factor	Influence Code
11.Regular Lot				%	
12.Delta Triangle				%	
13.Nabla Triangle				%	
14.Rear Land				%	
15.Class I Road				%	
				%	
				%	
Square Foot		**Square Feet**			
16.Class II Road				%	
17.Municipal Rese				%	
18.Munic Sep Lago				%	
19.Gravel Pit				%	
20.Industrial Bas				%	
				%	
				%	
Fract. Acre		**Acreage/Sites**			
21.Developed Pave	28	19.00	100	%	0
22.Undev Paved (F	31	18.50	100	%	0
23.Developed Grav	22	1.00	100	%	0
Acres				%	
24.Undev Gravel (				%	
25.Comm Base Pave				%	
26.Comm Base Grav				%	
27.Backlot				%	
28.Rear Land				%	
29.Pavement				%	

Total Acreage 38.50

Influence Codes

1.Unimproved
2.Excess Frtg
3.Topography
4.Size/Shape
5.Access
6.Restriction
7.Open Space
8.View/Environ
9.Fract Share
Acres
30.Utility R O W
31.Tillable
32.Pasture
33.Orchard
34.Softwood F&O
35.Mixed Wood F&O
36.Hardwood F&O
37.Softwood TG
38.Mixed Wood TG
39.Hardwood TG
40.Wasteland
41.Open Space
42.Mobile Home Si
43.Condo Site
44.Lot Improvemen
45.Subdivision Lo
46.Heavy Ind Sit

Inspection Witnessed By:

X Date

No./Date	Description	Date Insp.

Notes:

Washburn

Washburn

Map Lot 007-035 | Account 36 | Location EVERETT ROAD | Card 1 Of 1 | 8/23/2023

Building Style **0**		
1.Conv.	5.Garrison	9.Gambrel
2.Ranch	6.Salt Box	10.Other
3.R Ranch	7.Contemp	11.Split
4.Cape	8.Log	12.
Dwelling Units **0**		
Other Units **0**		
Stories **0**		
1.1	4.1.5	7.
2.2	5.1.75	8.
3.3	6.2.5	9.
Exterior Walls **0**		
1.Wood	5.Stucco	9.T-111
2.Vin/Al	6.Brick	10.Other
3.Compos.	7.Stone	11.
4.Asbestos	8.Concrete	12.
Roof Surface **0**		
1.Asphalt	4.Composit	7.
2.Slate	5.Wood	8.
3.Metal	6.Other	9.
SF Masonry Trim **0**		
OPEN-3-CUSTOM **0**		
OPEN-4-CUSTOM **0**		
Year Built **0**		
Year Remodeled **0**		
Foundation **0**		
1.Concrete	4.Wood	7.
2.C Block	5.Slab	8.
3.Br/Stone	6.Piers	9.
Basement **0**		
1.1/4 Bmt	4.Full Bmt	7.
2.1/2 Bmt	5.None	8.
3.3/4 Bmt	6.	9.None
Bsmt Gar # Cars **0**		
Wet Basement **0**		
1.Dry	4.	7.
2.Damp	5.	8.
3.Wet	6.	9.

SF Bsmt Living **0**		
Fin Bsmt Grade **0 0**		
OPEN 5 OPTIONAL **0**		
Heat Type **100%** **0**		
1.HWBB	5.FWA	9.No Heat
2.HWCI	6.GravWA	10.
3.H Pump	7.Electric	11.
4.Steam	8.Fl/Wall	12.
Cool Type **0%** **9 None**		
1.Refrig	4.W&C Air	7.
2.Evapor	5.	8.
3.H Pump	6.	9.None
Kitchen Style **0**		
1.Modern	4.Obsolete	7.
2.Typical	5.	8.
3.Old Type	6.	9.None
Bath(s) Style **0**		
1.Modern	4.Obsolete	7.
2.Typical	5.	8.
3.Old Type	6.	9.None
# Rooms **0**		
# Bedrooms **0**		
# Full Baths **0**		
# Half Baths **0**		
# Addn Fixtures **0**		
# Fireplaces **0**		

TRIO Software
A Division of Harris Computer Systems

Layout **0**		
1.Typical	4.	7.
2.Inadeq	5.	8.
3.Poor	6.	9.
Attic **0**		
1.1/4 Fin	4.Full Fin	7.
2.1/2 Fin	5.Fl/Stair	8.
3.3/4 Fin	6.	9.None
Insulation **0**		
1.Full	4.Minimal	7.
2.Heavy	5.Partial	8.
3.Capped	6.	9.None
Unfinished % **0%**		
Grade & Factor **0 0%**		
1.E Grade	4.B Grade	7.
2.D Grade	5.A Grade	8.SC Grade
3.C Grade	6.AA Grade	9.Same
SQFT (Footprint) **0**		
Condition **0**		
1.Poor	4.Avg	7.V G
2.Fair	5.Avg+	8.Exc
3.Avg-	6.Good	9.Same
Phys. % Good **0%**		
Funct. % Good **100%**		
Functional Code **9 None**		
1.Incomp	4.Delap	7.No Power
2.O-Built	5.Bsmt	8.LongTerm
3.Damage	6.Common	9.None
Econ. % Good **100%**		
Economic Code **None**		
0.None	3.No Power	7.
1.Location	4.Generate	8.
2.Encroach	9.None	9.
Entrance Code **0**		
1.Interior	4.Vacant	7.
2.Refusal	5.Estimate	8.
3.Informed	6.Reviewed	9.
Information Code **0**		
1.Owner	4.Agent	7.
2.Relative	5.Estimate	8.
3.Tenant	6.Other	9.

Date Inspected

Additions, Outbuildings & Improvements

Type	Year	Units	Grade	Cond	Phys.	Funct.	Sound Value
					%	%	
					%	%	
					%	%	
					%	%	
					%	%	
					%	%	
					%	%	
					%	%	
					%	%	
					%	%	

1.One Story Fram
2.Two Story Fram
3.Three Story Fr
4.1 & 1/2 Story
5.1 & 3/4 Story
6.2 & 1/2 Story
21.Open Frame Por
22.Encl Frame Por
23.Frame Garage
24.Frame Shed
25.Frame Bay Wind
26.1SFr Overhang
27.Unfin Basement
28.Unfinished Att
29.Finished Attic

Map Lot 007-035A | Account 40 | Location EVERETT ROAD | Card 1 Of 1 | 8/23/2023

BRAGG, RANDY T
725 HUDSON ROAD
GLENBURN ME 04401 1407

B2047P22

Inspection Witnessed By:

X Date

No./Date	Description	Date Insp.

Notes:

Washburn

Property Data

Neighborhood **1 Neighborhood One**

Tree Growth Year **0**

1ST MORTGAGE **0**

2ND MORTGAGE **0**

Zone/Land Use **1 Residential**

Secondary Zone

Topography **2 Rolling**

1.Level	4.Below St	7.LevelBog
2.Rolling	5.Low	8.
3.Above St	6.Swampy	9.

Utilities

1.Public	4.Dr Well	7.Cesspool
2.Water	5.Dug Well	8.
3.Sewer	6.Septic	9.None

Street **1 Paved**

1.Paved	4.Proposed	7.
2.Semi Imp	5.R/O/W	8.
3.Gravel	6.	9.None

TG PLAN YEAR **0**

Tif District # **0**

Sale Data

Sale Date **12/10/1987**

Price

Sale Type **1 Land Only**

1.Land	4.Mobile	7.C/I L&B
2.L & B	5.Other	8.
3.Building	6.C/I Land	9.

Financing

1.Convent	4.Seller	7.
2.FHA/VA	5.Private	8.
3.Assumed	6.Cash	9.Unknown

Validity **2 Related Parties**

1.Valid	4.Split	7.Renovate
2.Related	5.Partial	8.Other
3.Distress	6.Exempt	9.

Verified **5 Public Record**

1.Buyer	4.Agent	7.Family
2.Seller	5.Pub Rec	8.Other
3.Lender	6.MLS	9.

Assessment Record

Year	Land	Buildings	Exempt	Total
2012	8,700	0	0	8,700
2013	11,300	0	0	11,300
2015	11,300	0	0	11,300
2018	11,300	0	0	11,300
2019	19,500	0	0	19,500
2020	19,500	0	0	19,500
2021	19,500	0	0	19,500
2022	19,500	0	0	19,500
2023	21,500	0	0	21,500

Land Data

Front Foot	Type	Effective Frontage	Effective Depth	Influence Factor	Influence Code
11.Regular Lot				%	
12.Delta Triangle				%	
13.Nabla Triangle				%	
14.Rear Land				%	
15.Class I Road				%	
				%	
				%	
Square Foot		**Square Feet**			
16.Class II Road				%	
17.Municipal Rese				%	
18.Munic Sep Lago				%	
19.Gravel Pit				%	
20.Industrial Bas				%	
				%	
				%	
Fract. Acre		**Acreage/Sites**			
21.Developed Pave	22	1.00	100	%	0
22.Undev Paved (F	31	10.50	100	%	0
23.Developed Grav				%	
Acres				%	
24.Undev Gravel (				%	
25.Comm Base Pave				%	
26.Comm Base Grav				%	
27.Backlot				%	
28.Rear Land				%	
29.Pavement				%	

Total Acreage 11.50

Influence Codes

1.Unimproved
2.Excess Frtg
3.Topography
4.Size/Shape
5.Access
6.Restriction
7.Open Space
8.View/Environ
9.Fract Share
Acres
30.Utility R O W
31.Tillable
32.Pasture
33.Orchard
34.Softwood F&O
35.Mixed Wood F&O
36.Hardwood F&O
37.Softwood TG
38.Mixed Wood TG
39.Hardwood TG
40.Wasteland
41.Open Space
42.Mobile Home Si
43.Condo Site
44.Lot Improvemen
45.Subdivision Lo
46.Heavy Ind Sit

Washburn

Map Lot 007-035A | Account 40 | Location EVERETT ROAD | Card 1 Of 1 | 8/23/2023

Building Style **0**		
1.Conv.	5.Garrison	9.Gambrel
2.Ranch	6.Salt Box	10.Other
3.R Ranch	7.Contemp	11.Split
4.Cape	8.Log	12.
Dwelling Units **0**		
Other Units **0**		
Stories **0**		
1.1	4.1.5	7.
2.2	5.1.75	8.
3.3	6.2.5	9.
Exterior Walls **0**		
1.Wood	5.Stucco	9.T-111
2.Vin/Al	6.Brick	10.Other
3.Compos.	7.Stone	11.
4.Asbestos	8.Concrete	12.
Roof Surface **0**		
1.Asphalt	4.Composit	7.
2.Slate	5.Wood	8.
3.Metal	6.Other	9.
SF Masonry Trim **0**		
OPEN-3-CUSTOM **0**		
OPEN-4-CUSTOM **0**		
Year Built **0**		
Year Remodeled **0**		
Foundation **0**		
1.Concrete	4.Wood	7.
2.C Block	5.Slab	8.
3.Br/Stone	6.Piers	9.
Basement **0**		
1.1/4 Bmt	4.Full Bmt	7.
2.1/2 Bmt	5.None	8.
3.3/4 Bmt	6.	9.None
Bsmt Gar # Cars **0**		
Wet Basement **0**		
1.Dry	4.	7.
2.Damp	5.	8.
3.Wet	6.	9.

SF Bsmt Living **0**		
Fin Bsmt Grade **0 0**		
OPEN 5 OPTIONAL **0**		
Heat Type **100%** **0**		
1.HWBB	5.FWA	9.No Heat
2.HWCI	6.GravWA	10.
3.H Pump	7.Electric	11.
4.Steam	8.Fl/Wall	12.
Cool Type **0%** **9 None**		
1.Refrig	4.W&C Air	7.
2.Evapor	5.	8.
3.H Pump	6.	9.None
Kitchen Style **0**		
1.Modern	4.Obsolete	7.
2.Typical	5.	8.
3.Old Type	6.	9.None
Bath(s) Style **0**		
1.Modern	4.Obsolete	7.
2.Typical	5.	8.
3.Old Type	6.	9.None
# Rooms **0**		
# Bedrooms **0**		
# Full Baths **0**		
# Half Baths **0**		
# Addn Fixtures **0**		
# Fireplaces **0**		

TRIO Software
A Division of Harris Computer Systems

Layout **0**		
1.Typical	4.	7.
2.Inadeq	5.	8.
3.Poor	6.	9.
Attic **0**		
1.1/4 Fin	4.Full Fin	7.
2.1/2 Fin	5.Fl/Stair	8.
3.3/4 Fin	6.	9.None
Insulation **0**		
1.Full	4.Minimal	7.
2.Heavy	5.Partial	8.
3.Capped	6.	9.None
Unfinished % **0%**		
Grade & Factor **0 0%**		
1.E Grade	4.B Grade	7.
2.D Grade	5.A Grade	8.SC Grade
3.C Grade	6.AA Grade	9.Same
SQFT (Footprint) **0**		
Condition **0**		
1.Poor	4.Avg	7.V G
2.Fair	5.Avg+	8.Exc
3.Avg-	6.Good	9.Same
Phys. % Good **0%**		
Funct. % Good **100%**		
Functional Code **9 None**		
1.Incomp	4.Delap	7.No Power
2.O-Built	5.Bsmt	8.LongTerm
3.Damage	6.Common	9.None
Econ. % Good **100%**		
Economic Code **None**		
0.None	3.No Power	7.
1.Location	4.Generate	8.
2.Encroach	9.None	9.
Entrance Code **0**		
1.Interior	4.Vacant	7.
2.Refusal	5.Estimate	8.
3.Informed	6.Reviewed	9.
Information Code **0**		
1.Owner	4.Agent	7.
2.Relative	5.Estimate	8.
3.Tenant	6.Other	9.

Date Inspected

Additions, Outbuildings & Improvements

Type	Year	Units	Grade	Cond	Phys.	Funct.	Sound Value
					%	%	
					%	%	
					%	%	
					%	%	
					%	%	
					%	%	
					%	%	
					%	%	
					%	%	
					%	%	

1.One Story Fram
2.Two Story Fram
3.Three Story Fr
4.1 & 1/2 Story
5.1 & 3/4 Story
6.2 & 1/2 Story
21.Open Frame Por
22.Encl Frame Por
23.Frame Garage
24.Frame Shed
25.Frame Bay Wind
26.1SFr Overhang
27.Unfin Basement
28.Unfinished Att
29.Finished Attic

Map Lot 007-036 | Account 35 | Location Tabor Road | Card 1 Of 1 | 8/23/2023

Bragg, Linda A
PO BOX 503
WASHBURN ME 04786

B2039P4

Property Data

Neighborhood **1 Neighborhood One**

Tree Growth Year **0**

1ST MORTGAGE **0**

2ND MORTGAGE **0**

Zone/Land Use **1 Residential**

Secondary Zone

Topography **1 Level**

1.Level	4.Below St	7.LevelBog
2.Rolling	5.Low	8.
3.Above St	6.Swampy	9.

Utilities

1.Public	4.Dr Well	7.Cesspool
2.Water	5.Dug Well	8.
3.Sewer	6.Septic	9.None

Street **1 Paved**

1.Paved	4.Proposed	7.
2.Semi Imp	5.R/O/W	8.
3.Gravel	6.	9.None

TG PLAN YEAR **0**

Tif District # **0**

Sale Data

Sale Date

Price

Sale Type

1.Land	4.Mobile	7.C/I L&B
2.L & B	5.Other	8.
3.Building	6.C/I Land	9.

Financing

1.Convent	4.Seller	7.
2.FHA/VA	5.Private	8.
3.Assumed	6.Cash	9.Unknown

Validity

1.Valid	4.Split	7.Renovate
2.Related	5.Partial	8.Other
3.Distress	6.Exempt	9.

Verified

1.Buyer	4.Agent	7.Family
2.Seller	5.Pub Rec	8.Other
3.Lender	6.MLS	9.

Assessment Record

Year	Land	Buildings	Exempt	Total
2012	7,800	0	0	7,800
2013	10,100	0	0	10,100
2015	10,100	0	0	10,100
2018	10,100	0	0	10,100
2019	15,500	0	0	15,500
2020	15,500	0	0	15,500
2021	15,500	0	0	15,500
2022	15,500	0	0	15,500
2023	18,000	0	0	18,000

Land Data

Front Foot	Type	Effective Frontage	Effective Depth	Influence Factor	Influence Code
11.Regular Lot				%	
12.Delta Triangle				%	
13.Nabla Triangle				%	
14.Rear Land				%	
15.Class I Road				%	
				%	
				%	
Square Foot		**Square Feet**			
16.Class II Road				%	
17.Municipal Rese				%	
18.Munic Sep Lago				%	
19.Gravel Pit				%	
20.Industrial Bas				%	
				%	
				%	
Fract. Acre		**Acreage/Sites**			
21.Developed Pave	28		31.00	100 %	0
22.Undev Paved (F				%	
23.Developed Grav				%	
Acres				%	
24.Undev Gravel (				%	
25.Comm Base Pave				%	
26.Comm Base Grav				%	
27.Backlot				%	
28.Rear Land				%	
29.Pavement				%	

Total Acreage 31.00

Influence Codes

1.Unimproved
2.Excess Frtg
3.Topography
4.Size/Shape
5.Access
6.Restriction
7.Open Space
8.View/Environ
9.Fract Share

Acres

30.Utility R O W
31.Tillable
32.Pasture
33.Orchard
34.Softwood F&O
35.Mixed Wood F&O
36.Hardwood F&O
37.Softwood TG
38.Mixed Wood TG
39.Hardwood TG
40.Wasteland
41.Open Space
42.Mobile Home Si
43.Condo Site
44.Lot Improvemen
45.Subdivision Lo
46.Heavy Ind Sit

Inspection Witnessed By:

X Date

No./Date	Description	Date Insp.

Notes:

Washburn

Washburn

Map Lot 007-036 | Account 35 | Location Tabor Road | Card 1 Of 1 | 8/23/2023

Building Style **0**		
1.Conv.	5.Garrison	9.Gambrel
2.Ranch	6.Salt Box	10.Other
3.R Ranch	7.Contemp	11.Split
4.Cape	8.Log	12.
Dwelling Units **0**		
Other Units **0**		
Stories **0**		
1.1	4.1.5	7.
2.2	5.1.75	8.
3.3	6.2.5	9.
Exterior Walls **0**		
1.Wood	5.Stucco	9.T-111
2.Vin/Al	6.Brick	10.Other
3.Compos.	7.Stone	11.
4.Asbestos	8.Concrete	12.
Roof Surface **0**		
1.Asphalt	4.Composit	7.
2.Slate	5.Wood	8.
3.Metal	6.Other	9.
SF Masonry Trim **0**		
OPEN-3-CUSTOM **0**		
OPEN-4-CUSTOM **0**		
Year Built **0**		
Year Remodeled **0**		
Foundation **0**		
1.Concrete	4.Wood	7.
2.C Block	5.Slab	8.
3.Br/Stone	6.Piers	9.
Basement **0**		
1.1/4 Bmt	4.Full Bmt	7.
2.1/2 Bmt	5.None	8.
3.3/4 Bmt	6.	9.None
Bsmt Gar # Cars **0**		
Wet Basement **0**		
1.Dry	4.	7.
2.Damp	5.	8.
3.Wet	6.	9.

SF Bsmt Living **0**		
Fin Bsmt Grade **0 0**		
OPEN 5 OPTIONAL **0**		
Heat Type **100%** **0**		
1.HWBB	5.FWA	9.No Heat
2.HWCI	6.GravWA	10.
3.H Pump	7.Electric	11.
4.Steam	8.Fl/Wall	12.
Cool Type **0%** **9 None**		
1.Refrig	4.W&C Air	7.
2.Evapor	5.	8.
3.H Pump	6.	9.None
Kitchen Style **0**		
1.Modern	4.Obsolete	7.
2.Typical	5.	8.
3.Old Type	6.	9.None
Bath(s) Style **0**		
1.Modern	4.Obsolete	7.
2.Typical	5.	8.
3.Old Type	6.	9.None
# Rooms **0**		
# Bedrooms **0**		
# Full Baths **0**		
# Half Baths **0**		
# Addn Fixtures **0**		
# Fireplaces **0**		

TRIO Software
A Division of Harris Computer Systems

Layout **0**		
1.Typical	4.	7.
2.Inadeq	5.	8.
3.Poor	6.	9.
Attic **0**		
1.1/4 Fin	4.Full Fin	7.
2.1/2 Fin	5.Fl/Stair	8.
3.3/4 Fin	6.	9.None
Insulation **0**		
1.Full	4.Minimal	7.
2.Heavy	5.Partial	8.
3.Capped	6.	9.None
Unfinished % **0%**		
Grade & Factor **0 0%**		
1.E Grade	4.B Grade	7.
2.D Grade	5.A Grade	8.SC Grade
3.C Grade	6.AA Grade	9.Same
SQFT (Footprint) **0**		
Condition **0**		
1.Poor	4.Avg	7.V G
2.Fair	5.Avg+	8.Exc
3.Avg-	6.Good	9.Same
Phys. % Good **0%**		
Funct. % Good **100%**		
Functional Code **9 None**		
1.Incomp	4.Delap	7.No Power
2.O-Built	5.Bsmt	8.LongTerm
3.Damage	6.Common	9.None
Econ. % Good **100%**		
Economic Code **None**		
0.None	3.No Power	7.
1.Location	4.Generate	8.
2.Encroach	9.None	9.
Entrance Code **0**		
1.Interior	4.Vacant	7.
2.Refusal	5.Estimate	8.
3.Informed	6.Reviewed	9.
Information Code **0**		
1.Owner	4.Agent	7.
2.Relative	5.Estimate	8.
3.Tenant	6.Other	9.

Date Inspected

Additions, Outbuildings & Improvements

Type	Year	Units	Grade	Cond	Phys.	Funct.	Sound Value
					%	%	
					%	%	
					%	%	
					%	%	
					%	%	
					%	%	
					%	%	
					%	%	
					%	%	
					%	%	

1.One Story Fram
2.Two Story Fram
3.Three Story Fr
4.1 & 1/2 Story
5.1 & 3/4 Story
6.2 & 1/2 Story
21.Open Frame Por
22.Encl Frame Por
23.Frame Garage
24.Frame Shed
25.Frame Bay Wind
26.1SFr Overhang
27.Unfin Basement
28.Unfinished Att
29.Finished Attic

Map Lot 007-037 & 038 | Account 403 | Location 173 Everett Road | Card 1 Of 1 | 8/23/2023

Drost, Willie E
Drost, Judith A
PO BOX 375
WASHBURN ME 04786

B1399P154

Property Data

Neighborhood **1 Neighborhood One**

Tree Growth Year **0**

1ST MORTGAGE **0**

2ND MORTGAGE **0**

Zone/Land Use **1 Residential**

Secondary Zone

Topography **2 Rolling**

1.Level	4.Below St	7.LevelBog
2.Rolling	5.Low	8.
3.Above St	6.Swampy	9.

Utilities **4 Drilled Well** **6 Septic System**

1.Public	4.Dr Well	7.Cesspool
2.Water	5.Dug Well	8.
3.Sewer	6.Septic	9.None

Street **1 Paved**

1.Paved	4.Proposed	7.
2.Semi Imp	5.R/O/W	8.
3.Gravel	6.	9.None

TG PLAN YEAR **0**

Tif District # **0**

Sale Data

Sale Date

Price

Sale Type **2 Land & Buildings**

1.Land	4.Mobile	7.C/I L&B
2.L & B	5.Other	8.
3.Building	6.C/I Land	9.

Financing

1.Convent	4.Seller	7.
2.FHA/VA	5.Private	8.
3.Assumed	6.Cash	9.Unknown

Validity

1.Valid	4.Split	7.Renovate
2.Related	5.Partial	8.Other
3.Distress	6.Exempt	9.

Verified

1.Buyer	4.Agent	7.Family
2.Seller	5.Pub Rec	8.Other
3.Lender	6.MLS	9.

Assessment Record

Year	Land	Buildings	Exempt	Total
2012	3,900	26,100	14,080	15,920
2013	5,000	26,100	14,080	17,020
2015	5,000	26,100	14,400	16,700
2018	5,000	26,100	23,920	7,180
2019	19,200	32,400	26,000	25,600
2020	37,500	20,200	31,000	26,700
2021	44,800	20,400	31,000	34,200
2022	44,800	21,400	31,000	35,200
2023	50,800	25,500	31,000	45,300

Land Data

Front Foot	Type	Effective Frontage	Effective Depth	Influence Factor	Influence Code
11.Regular Lot				%	
12.Delta Triangle				%	
13.Nabla Triangle				%	
14.Rear Land				%	
15.Class I Road				%	
				%	
				%	
Square Foot		**Square Feet**			
16.Class II Road				%	
17.Municipal Rese				%	
18.Munic Sep Lago				%	
19.Gravel Pit				%	
20.Industrial Bas				%	
				%	
				%	
Fract. Acre		**Acreage/Sites**			
21.Developed Pave	21	1.00	75	%	1
22.Undev Paved (F	28	21.50	100	%	0
23.Developed Grav	31	21.21	100	%	0
Acres	40	7.79	100	%	0
24.Undev Gravel (				%	
25.Comm Base Pave				%	
26.Comm Base Grav				%	
27.Backlot					
28.Rear Land					
29.Pavement					

Total Acreage 51.50

Influence Codes

1.Unimproved
2.Excess Frtg
3.Topography
4.Size/Shape
5.Access
6.Restriction
7.Open Space
8.View/Environ
9.Fract Share
Acres
30.Utility R O W
31.Tillable
32.Pasture
33.Orchard
34.Softwood F&O
35.Mixed Wood F&O
36.Hardwood F&O
37.Softwood TG
38.Mixed Wood TG
39.Hardwood TG
40.Wasteland
41.Open Space
42.Mobile Home Si
43.Condo Site
44.Lot Improvemen
45.Subdivision Lo
46.Heavy Ind Sit

Inspection Witnessed By:

X Date

No./Date	Description	Date Insp.

Notes:

*1-3-2019 -20% for attached garage and shed. Lots 7-37 & 38 are on one deed and should be listed as one lot. Building corrected.

Washburn

Washburn

Map Lot 007-037 & 038 | Account 403 | Location 173 Everett Road | Card 1 Of 1 | 8/23/2023

Building Style **1 Conventional**		
1.Conv.	5.Garrison	9.Gambrel
2.Ranch	6.Salt Box	10.Other
3.R Ranch	7.Contemp	11.Split
4.Cape	8.Log	12.
Dwelling Units **1**		
Other Units **0**		
Stories **5 One & 3/4 Story**		
1.1	4.1.5	7.
2.2	5.1.75	8.
3.3	6.2.5	9.
Exterior Walls **10 Other**		
1.Wood	5.Stucco	9.T-111
2.Vin/Al	6.Brick	10.Other
3.Compos.	7.Stone	11.
4.Asbestos	8.Concrete	12.
Roof Surface **3 Sheet Metal**		
1.Asphalt	4.Composit	7.
2.Slate	5.Wood	8.
3.Metal	6.Other	9.
SF Masonry Trim **0**		
OPEN-3-CUSTOM **0**		
OPEN-4-CUSTOM **0**		
Year Built **1970**		
Year Remodeled **0**		
Foundation **6 Piers**		
1.Concrete	4.Wood	7.
2.C Block	5.Slab	8.
3.Br/Stone	6.Piers	9.
Basement **9 No Basement**		
1.1/4 Bmt	4.Full Bmt	7.
2.1/2 Bmt	5.None	8.
3.3/4 Bmt	6.	9.None
Bsmt Gar # Cars **0**		
Wet Basement **9 No Basement**		
1.Dry	4.	7.
2.Damp	5.	8.
3.Wet	6.	9.

SF Bsmt Living **0**		
Fin Bsmt Grade **0 0**		
OPEN 5 OPTIONAL **0**		
Heat Type **100%** **1 Hot Water BB**		
1.HWBB	5.FWA	9.No Heat
2.HWCI	6.GravWA	10.
3.H Pump	7.Electric	11.
4.Steam	8.Fl/Wall	12.
Cool Type **50%** **3 Heat Pump**		
1.Refrig	4.W&C Air	7.
2.Evapor	5.	8.
3.H Pump	6.	9.None
Kitchen Style **2 Typical**		
1.Modern	4.Obsolete	7.
2.Typical	5.	8.
3.Old Type	6.	9.None
Bath(s) Style **2 Typical Bath(s)**		
1.Modern	4.Obsolete	7.
2.Typical	5.	8.
3.Old Type	6.	9.None
# Rooms **3**		
# Bedrooms **1**		
# Full Baths **1**		
# Half Baths **1**		
# Addn Fixtures **0**		
# Fireplaces **0**		

TRIO Software
A Division of Harris Computer Systems

Layout **1 Typical**		
1.Typical	4.	7.
2.Inadeq	5.	8.
3.Poor	6.	9.
Attic **9 None**		
1.1/4 Fin	4.Full Fin	7.
2.1/2 Fin	5.Fl/Stair	8.
3.3/4 Fin	6.	9.None
Insulation **4 Minimal**		
1.Full	4.Minimal	7.
2.Heavy	5.Partial	8.
3.Capped	6.	9.None
Unfinished % **0%**		
Grade & Factor **1 Low 100%**		
1.E Grade	4.B Grade	7.
2.D Grade	5.A Grade	8.SC Grade
3.C Grade	6.AA Grade	9.Same
SQFT (Footprint) **832**		
Condition **1 Poor**		
1.Poor	4.Avg	7.V G
2.Fair	5.Avg+	8.Exc
3.Avg-	6.Good	9.Same
Phys. % Good **0%**		
Funct. % Good **50%**		
Functional Code **4 Delapidation**		
1.Incomp	4.Delap	7.No Power
2.O-Built	5.Bsmt	8.LongTerm
3.Damage	6.Common	9.None
Econ. % Good **100%**		
Economic Code **None**		
0.None	3.No Power	7.
1.Location	4.Generate	8.
2.Encroach	9.None	9.
Entrance Code **5 Estimated**		
1.Interior	4.Vacant	7.
2.Refusal	5.Estimate	8.
3.Informed	6.Reviewed	9.
Information Code **5 Estimate**		
1.Owner	4.Agent	7.
2.Relative	5.Estimate	8.
3.Tenant	6.Other	9.

Date Inspected 10/18/2018

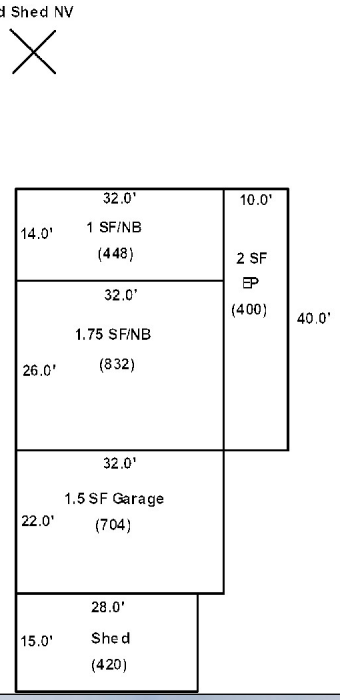

Additions, Outbuildings & Improvements

Type	Year	Units	Grade	Cond	Phys.	Funct.	Sound Value
1 One Story Frame	1980	448	2 100	2	0 %	75 %	
42 2S Encl Fr Porch	1985	400	2 100	2	0 %	75 %	
82 1.5 S-Gar	1975	704	2 100	2	0 %	70 %	
24 Frame Shed	1980	420	2 100	2	0 %	70 %	
					%	%	
					%	%	
					%	%	
					%	%	
					%	%	
					%	%	

1.One Story Fram
2.Two Story Fram
3.Three Story Fr
4.1 & 1/2 Story
5.1 & 3/4 Story
6.2 & 1/2 Story
21.Open Frame Por
22.Encl Frame Por
23.Frame Garage
24.Frame Shed
25.Frame Bay Wind
26.1SFr Overhang
27.Unfin Basement
28.Unfinished Att
29.Finished Attic

Map Lot 007-038A | Account 492 | Location 83 EVERETT ROAD | Card 1 Of 1 | 8/23/2023

BAECHLE, RICHARD R
BAECHLE, KARRY V
83 EVERETT RD
WASHBURN ME 04786

B4255P297 B4255P299

Property Data

Neighborhood	**1 Neighborhood One**
Tree Growth Year	**0**
1ST MORTGAGE	**0**
2ND MORTGAGE	**0**
Zone/Land Use	**1 Residential**
Secondary Zone	
Topography	**1 Level**

1.Level	4.Below St	7.LevelBog
2.Rolling	5.Low	8.
3.Above St	6.Swampy	9.

Utilities **4 Drilled Well** **6 Septic System**

1.Public	4.Dr Well	7.Cesspool
2.Water	5.Dug Well	8.
3.Sewer	6.Septic	9.None

Street **1 Paved**

1.Paved	4.Proposed	7.
2.Semi Imp	5.R/O/W	8.
3.Gravel	6.	9.None

TG PLAN YEAR	**0**
Tif District #	**0**

Sale Data

Sale Date	**3/10/2006**
Price	**40,000**
Sale Type	**2 Land & Buildings**

1.Land	4.Mobile	7.C/I L&B
2.L & B	5.Other	8.
3.Building	6.C/I Land	9.

Financing **1 Conventional**

1.Convent	4.Seller	7.
2.FHA/VA	5.Private	8.
3.Assumed	6.Cash	9.Unknown

Validity **1 Arms Length Sale**

1.Valid	4.Split	7.Renovate
2.Related	5.Partial	8.Other
3.Distress	6.Exempt	9.

Verified **5 Public Record**

1.Buyer	4.Agent	7.Family
2.Seller	5.Pub Rec	8.Other
3.Lender	6.MLS	9.

Assessment Record

Year	Land	Buildings	Exempt	Total
2012	6,500	37,700	8,800	35,400
2013	8,500	37,700	8,800	37,400
2015	8,500	37,700	9,000	37,200
2018	8,500	37,700	18,400	27,800
2019	18,800	23,500	20,000	22,300
2020	18,800	23,300	25,000	17,100
2021	18,800	23,500	25,000	17,300
2022	18,800	24,700	25,000	18,500
2023	24,300	29,200	25,000	28,500

Land Data

Front Foot	Type	Effective Frontage	Effective Depth	Influence Factor	Influence Code
11.Regular Lot				%	
12.Delta Triangle				%	
13.Nabla Triangle				%	
14.Rear Land				%	
15.Class I Road				%	
				%	
				%	
Square Foot		**Square Feet**			
16.Class II Road	29	1,200		75 %	0
17.Municipal Rese				%	
18.Munic Sep Lago				%	
19.Gravel Pit				%	
20.Industrial Bas				%	
				%	
				%	
Fract. Acre		**Acreage/Sites**			
21.Developed Pave	21	1.00		100 %	0
22.Undev Paved (F				%	
23.Developed Grav				%	
Acres				%	
24.Undev Gravel (				%	
25.Comm Base Pave				%	
26.Comm Base Grav				%	
27.Backlot				%	
28.Rear Land				%	
29.Pavement				%	

Total Acreage 1.00

Influence Codes

1.Unimproved
2.Excess Frtg
3.Topography
4.Size/Shape
5.Access
6.Restriction
7.Open Space
8.View/Environ
9.Fract Share
Acres
30.Utility R O W
31.Tillable
32.Pasture
33.Orchard
34.Softwood F&O
35.Mixed Wood F&O
36.Hardwood F&O
37.Softwood TG
38.Mixed Wood TG
39.Hardwood TG
40.Wasteland
41.Open Space
42.Mobile Home Si
43.Condo Site
44.Lot Improvemen
45.Subdivision Lo
46.Heavy Ind Sit

Inspection Witnessed By:

X Date

No./Date	Description	Date Insp.

Notes:

Washburn

Washburn

Map Lot 007-038A | Account 492 | Location 83 EVERETT ROAD | Card 1 Of 1 | 8/23/2023

Building Style **0**		
1.Conv.	5.Garrison	9.Gambrel
2.Ranch	6.Salt Box	10.Other
3.R Ranch	7.Contemp	11.Split
4.Cape	8.Log	12.
Dwelling Units **0**		
Other Units **0**		
Stories **0**		
1.1	4.1.5	7.
2.2	5.1.75	8.
3.3	6.2.5	9.
Exterior Walls **0**		
1.Wood	5.Stucco	9.T-111
2.Vin/Al	6.Brick	10.Other
3.Compos.	7.Stone	11.
4.Asbestos	8.Concrete	12.
Roof Surface **0**		
1.Asphalt	4.Composit	7.
2.Slate	5.Wood	8.
3.Metal	6.Other	9.
SF Masonry Trim **0**		
OPEN-3-CUSTOM **0**		
OPEN-4-CUSTOM **0**		
Year Built **0**		
Year Remodeled **0**		
Foundation **0**		
1.Concrete	4.Wood	7.
2.C Block	5.Slab	8.
3.Br/Stone	6.Piers	9.
Basement **0**		
1.1/4 Bmt	4.Full Bmt	7.
2.1/2 Bmt	5.None	8.
3.3/4 Bmt	6.	9.None
Bsmt Gar # Cars **0**		
Wet Basement **0**		
1.Dry	4.	7.
2.Damp	5.	8.
3.Wet	6.	9.

SF Bsmt Living **0**		
Fin Bsmt Grade **0 0**		
OPEN 5 OPTIONAL **0**		
Heat Type **100%** **0**		
1.HWBB	5.FWA	9.No Heat
2.HWCI	6.GravWA	10.
3.H Pump	7.Electric	11.
4.Steam	8.Fl/Wall	12.
Cool Type **0%** **9 None**		
1.Refrig	4.W&C Air	7.
2.Evapor	5.	8.
3.H Pump	6.	9.None
Kitchen Style **0**		
1.Modern	4.Obsolete	7.
2.Typical	5.	8.
3.Old Type	6.	9.None
Bath(s) Style **0**		
1.Modern	4.Obsolete	7.
2.Typical	5.	8.
3.Old Type	6.	9.None
# Rooms **0**		
# Bedrooms **0**		
# Full Baths **0**		
# Half Baths **0**		
# Addn Fixtures **0**		
# Fireplaces **0**		

TRIO Software
A Division of Harris Computer Systems

Layout **0**		
1.Typical	4.	7.
2.Inadeq	5.	8.
3.Poor	6.	9.
Attic **0**		
1.1/4 Fin	4.Full Fin	7.
2.1/2 Fin	5.Fl/Stair	8.
3.3/4 Fin	6.	9.None
Insulation **0**		
1.Full	4.Minimal	7.
2.Heavy	5.Partial	8.
3.Capped	6.	9.None
Unfinished % **0%**		
Grade & Factor **0 0%**		
1.E Grade	4.B Grade	7.
2.D Grade	5.A Grade	8.SC Grade
3.C Grade	6.AA Grade	9.Same
SQFT (Footprint) **0**		
Condition **0**		
1.Poor	4.Avg	7.V G
2.Fair	5.Avg+	8.Exc
3.Avg-	6.Good	9.Same
Phys. % Good **0%**		
Funct. % Good **100%**		
Functional Code **9 None**		
1.Incomp	4.Delap	7.No Power
2.O-Built	5.Bsmt	8.LongTerm
3.Damage	6.Common	9.None
Econ. % Good **100%**		
Economic Code **None**		
0.None	3.No Power	7.
1.Location	4.Generate	8.
2.Encroach	9.None	9.
Entrance Code **3 Information Only**		
1.Interior	4.Vacant	7.
2.Refusal	5.Estimate	8.
3.Informed	6.Reviewed	9.
Information Code **1 Owner**		
1.Owner	4.Agent	7.
2.Relative	5.Estimate	8.
3.Tenant	6.Other	9.

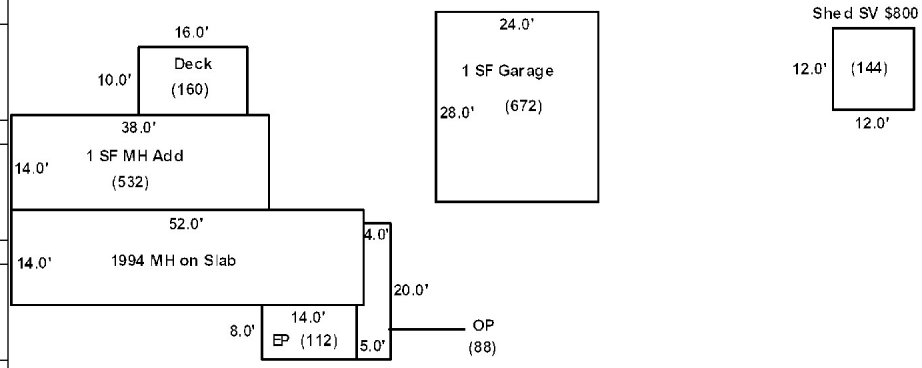

Date Inspected 10/18/2018

Additions, Outbuildings & Improvements

Type	Year	Units	Grade	Cond	Phys.	Funct.	Sound Value
998 14Mobile Home	1994	14x52	4 100	4	0 %	100 %	
48 Concrete Slab	1994	728	3 100	4	0 %	100 %	
22 Encl Frame Porch	2000	112	2 110	3	0 %	100 %	
21 Open Frame	2000	88	2 105	3	0 %	100 %	
18 1 S-MH add	1995	532	2 110	3	0 %	100 %	
68 Wood Deck	1998	160	2 110	3	0 %	100 %	
23 Frame Garage	1980	672	3 95	3	0 %	100 %	
24 Frame Shed	0				%	%	850
					%	%	
					%	%	

1.One Story Fram
2.Two Story Fram
3.Three Story Fr
4.1 & 1/2 Story
5.1 & 3/4 Story
6.2 & 1/2 Story
21.Open Frame Por
22.Encl Frame Por
23.Frame Garage
24.Frame Shed
25.Frame Bay Wind
26.1SFr Overhang
27.Unfin Basement
28.Unfinished Att
29.Finished Attic

Map Lot 007-038B | Account 683 | Location Everett Road | Card 1 Of 1 | 8/23/2023

Washburn Boy Scouts, Troop 177
c/o Larry Harrison
P.O. Box 501
Crouseville ME 04738

B3493P207

Property Data

Neighborhood **1 Neighborhood One**

Tree Growth Year **0**

1ST MORTGAGE **0**

2ND MORTGAGE **0**

Zone/Land Use **1 Residential**

Secondary Zone

Topography **2 Rolling**

1.Level	4.Below St	7.LevelBog
2.Rolling	5.Low	8.
3.Above St	6.Swampy	9.

Utilities **4 Drilled Well** **6 Septic System**

1.Public	4.Dr Well	7.Cesspool
2.Water	5.Dug Well	8.
3.Sewer	6.Septic	9.None

Street **1 Paved**

1.Paved	4.Proposed	7.
2.Semi Imp	5.R/O/W	8.
3.Gravel	6.	9.None

TG PLAN YEAR **0**

Tif District # **0**

Sale Data

Sale Date

Price

Sale Type

1.Land	4.Mobile	7.C/I L&B
2.L & B	5.Other	8.
3.Building	6.C/I Land	9.

Financing

1.Convent	4.Seller	7.
2.FHA/VA	5.Private	8.
3.Assumed	6.Cash	9.Unknown

Validity

1.Valid	4.Split	7.Renovate
2.Related	5.Partial	8.Other
3.Distress	6.Exempt	9.

Verified

1.Buyer	4.Agent	7.Family
2.Seller	5.Pub Rec	8.Other
3.Lender	6.MLS	9.

Assessment Record

Year	Land	Buildings	Exempt	Total
2012	9,200	6,100	15,300	0
2013	11,900	6,100	18,000	0
2015	11,900	6,100	18,000	0
2018	11,900	6,100	18,000	0
2019	23,800	36,700	60,500	0
2020	23,800	36,700	60,500	0
2021	23,800	36,700	60,500	0
2022	23,800	38,500	62,300	0
2023	30,400	45,500	75,900	0

Land Data

Front Foot	Type	Effective Frontage	Effective Depth	Influence Factor	Influence Code
11.Regular Lot				%	
12.Delta Triangle				%	
13.Nabla Triangle				%	
14.Rear Land				%	
15.Class I Road				%	
				%	
				%	
Square Foot		**Square Feet**			
16.Class II Road				%	
17.Municipal Rese				%	
18.Munic Sep Lago				%	
19.Gravel Pit				%	
20.Industrial Bas				%	
				%	
				%	
Fract. Acre		**Acreage/Sites**			
21.Developed Pave	21	1.00	100	%	0
22.Undev Paved (F	28	14.50	100	%	0
23.Developed Grav				%	
Acres				%	
24.Undev Gravel (				%	
25.Comm Base Pave				%	
26.Comm Base Grav				%	
27.Backlot				%	
28.Rear Land				%	
29.Pavement				%	

Total Acreage 15.50

Influence Codes

1.Unimproved
2.Excess Frtg
3.Topography
4.Size/Shape
5.Access
6.Restriction
7.Open Space
8.View/Environ
9.Fract Share
Acres
30.Utility R O W
31.Tillable
32.Pasture
33.Orchard
34.Softwood F&O
35.Mixed Wood F&O
36.Hardwood F&O
37.Softwood TG
38.Mixed Wood TG
39.Hardwood TG
40.Wasteland
41.Open Space
42.Mobile Home Si
43.Condo Site
44.Lot Improvemen
45.Subdivision Lo
46.Heavy Ind Sit

Inspection Witnessed By:

X Date

No./Date	Description	Date Insp.

Notes:

Washburn

Washburn

Map Lot 007-038B | Account 683 | Location Everett Road | Card 1 Of 1 | 8/23/2023

Building Style **0**		
1.Conv.	5.Garrison	9.Gambrel
2.Ranch	6.Salt Box	10.Other
3.R Ranch	7.Contemp	11.Split
4.Cape	8.Log	12.
Dwelling Units **0**		
Other Units **0**		
Stories **0**		
1.1	4.1.5	7.
2.2	5.1.75	8.
3.3	6.2.5	9.
Exterior Walls **0**		
1.Wood	5.Stucco	9.T-111
2.Vin/Al	6.Brick	10.Other
3.Compos.	7.Stone	11.
4.Asbestos	8.Concrete	12.
Roof Surface **0**		
1.Asphalt	4.Composit	7.
2.Slate	5.Wood	8.
3.Metal	6.Other	9.
SF Masonry Trim **0**		
OPEN-3-CUSTOM **0**		
OPEN-4-CUSTOM **0**		
Year Built **0**		
Year Remodeled **0**		
Foundation **0**		
1.Concrete	4.Wood	7.
2.C Block	5.Slab	8.
3.Br/Stone	6.Piers	9.
Basement **0**		
1.1/4 Bmt	4.Full Bmt	7.
2.1/2 Bmt	5.None	8.
3.3/4 Bmt	6.	9.None
Bsmt Gar # Cars **0**		
Wet Basement **0**		
1.Dry	4.	7.
2.Damp	5.	8.
3.Wet	6.	9.

SF Bsmt Living **0**		
Fin Bsmt Grade **0 0**		
OPEN 5 OPTIONAL **0**		
Heat Type **100%** **0**		
1.HWBB	5.FWA	9.No Heat
2.HWCI	6.GravWA	10.
3.H Pump	7.Electric	11.
4.Steam	8.Fl/Wall	12.
Cool Type **0%** **9 None**		
1.Refrig	4.W&C Air	7.
2.Evapor	5.	8.
3.H Pump	6.	9.None
Kitchen Style **0**		
1.Modern	4.Obsolete	7.
2.Typical	5.	8.
3.Old Type	6.	9.None
Bath(s) Style **0**		
1.Modern	4.Obsolete	7.
2.Typical	5.	8.
3.Old Type	6.	9.None
# Rooms **0**		
# Bedrooms **0**		
# Full Baths **0**		
# Half Baths **0**		
# Addn Fixtures **0**		
# Fireplaces **0**		

TRIO Software
A Division of Harris Computer Systems

Layout **0**		
1.Typical	4.	7.
2.Inadeq	5.	8.
3.Poor	6.	9.
Attic **0**		
1.1/4 Fin	4.Full Fin	7.
2.1/2 Fin	5.Fl/Stair	8.
3.3/4 Fin	6.	9.None
Insulation **0**		
1.Full	4.Minimal	7.
2.Heavy	5.Partial	8.
3.Capped	6.	9.None
Unfinished % **0%**		
Grade & Factor **0 0%**		
1.E Grade	4.B Grade	7.
2.D Grade	5.A Grade	8.SC Grade
3.C Grade	6.AA Grade	9.Same
SQFT (Footprint) **0**		
Condition **0**		
1.Poor	4.Avg	7.V G
2.Fair	5.Avg+	8.Exc
3.Avg-	6.Good	9.Same
Phys. % Good **0%**		
Funct. % Good **100%**		
Functional Code **9 None**		
1.Incomp	4.Delap	7.No Power
2.O-Built	5.Bsmt	8.LongTerm
3.Damage	6.Common	9.None
Econ. % Good **100%**		
Economic Code **None**		
0.None	3.No Power	7.
1.Location	4.Generate	8.
2.Encroach	9.None	9.
Entrance Code **5 Estimated**		
1.Interior	4.Vacant	7.
2.Refusal	5.Estimate	8.
3.Informed	6.Reviewed	9.
Information Code **5 Estimate**		
1.Owner	4.Agent	7.
2.Relative	5.Estimate	8.
3.Tenant	6.Other	9.

Date Inspected 10/18/2018

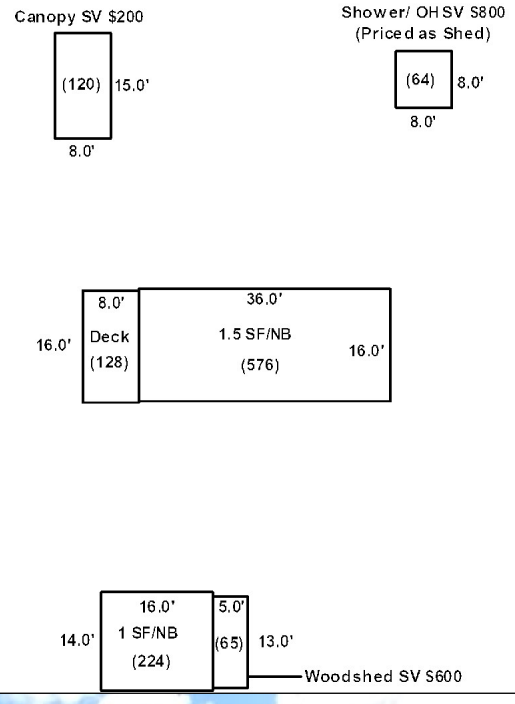

Additions, Outbuildings & Improvements

Type	Year	Units	Grade	Cond	Phys.	Funct.	Sound Value
4 1 & 1/2 Story Fr	1985	576	2 100	3	0 %	100 %	
68 Wood Deck	1995	128	2 100	3	0 %	100 %	
1 One Story Frame	2010	224	2 105	4	0 %	100 %	
24 Frame Shed	0				%	%	600
61 Canopy	0				%	%	200
24 Frame Shed	0				%	%	600
					%	%	
					%	%	
					%	%	
					%	%	

1.One Story Fram
2.Two Story Fram
3.Three Story Fr
4.1 & 1/2 Story
5.1 & 3/4 Story
6.2 & 1/2 Story
21.Open Frame Por
22.Encl Frame Por
23.Frame Garage
24.Frame Shed
25.Frame Bay Wind
26.1SFr Overhang
27.Unfin Basement
28.Unfinished Att
29.Finished Attic

Map Lot 007-038C | Account 402 | Location 71 EVERETT ROAD | Card 1 Of 1 | 8/23/2023

DROST, SONNY
DROST, JEAN
P.O. BOX 401
WASHBURN ME 04786

B4885P51

Property Data

Neighborhood **1 Neighborhood One**

Tree Growth Year **0**

1ST MORTGAGE **0**

2ND MORTGAGE **0**

Zone/Land Use **1 Residential**

Secondary Zone

Topography **1 Level**

1.Level	4.Below St	7.LevelBog
2.Rolling	5.Low	8.
3.Above St	6.Swampy	9.

Utilities **4 Drilled Well** **6 Septic System**

1.Public	4.Dr Well	7.Cesspool
2.Water	5.Dug Well	8.
3.Sewer	6.Septic	9.None

Street **1 Paved**

1.Paved	4.Proposed	7.
2.Semi Imp	5.R/O/W	8.
3.Gravel	6.	9.None

TG PLAN YEAR **0**

Tif District # **0**

Sale Data

Sale Date **11/10/2010**

Price **4,000**

Sale Type **2 Land & Buildings**

1.Land	4.Mobile	7.C/I L&B
2.L & B	5.Other	8.
3.Building	6.C/I Land	9.

Financing

1.Convent	4.Seller	7.
2.FHA/VA	5.Private	8.
3.Assumed	6.Cash	9.Unknown

Validity **2 Related Parties**

1.Valid	4.Split	7.Renovate
2.Related	5.Partial	8.Other
3.Distress	6.Exempt	9.

Verified **5 Public Record**

1.Buyer	4.Agent	7.Family
2.Seller	5.Pub Rec	8.Other
3.Lender	6.MLS	9.

Assessment Record

Year	Land	Buildings	Exempt	Total
2012	8,000	26,300	8,800	25,500
2013	10,400	26,300	8,800	27,900
2015	10,400	26,300	9,000	27,700
2018	10,400	26,300	18,400	18,300
2019	18,000	24,100	20,000	22,100
2020	18,000	24,000	25,000	17,000
2021	18,000	24,100	25,000	17,100
2022	18,000	25,200	25,000	18,200
2023	23,700	29,700	25,000	28,400

Land Data

Front Foot	Type	Effective Frontage	Effective Depth	Influence Factor	Influence Code
11.Regular Lot				%	
12.Delta Triangle				%	
13.Nabla Triangle				%	
14.Rear Land				%	
15.Class I Road				%	
				%	
				%	
Square Foot		**Square Feet**			
16.Class II Road				%	
17.Municipal Rese				%	
18.Munic Sep Lago				%	
19.Gravel Pit				%	
20.Industrial Bas				%	
				%	
				%	
Fract. Acre		**Acreage/Sites**			
21.Developed Pave	21	1.00	100	%	0
22.Undev Paved (F	28	3.00	100	%	0
23.Developed Grav				%	
Acres				%	
24.Undev Gravel (				%	
25.Comm Base Pave				%	
26.Comm Base Grav				%	
27.Backlot				%	
28.Rear Land				%	
29.Pavement				%	

Total Acreage 4.00

Influence Codes

1.Unimproved
2.Excess Frtg
3.Topography
4.Size/Shape
5.Access
6.Restriction
7.Open Space
8.View/Environ
9.Fract Share
Acres
30.Utility R O W
31.Tillable
32.Pasture
33.Orchard
34.Softwood F&O
35.Mixed Wood F&O
36.Hardwood F&O
37.Softwood TG
38.Mixed Wood TG
39.Hardwood TG
40.Wasteland
41.Open Space
42.Mobile Home Si
43.Condo Site
44.Lot Improvemen
45.Subdivision Lo
46.Heavy Ind Sit

Inspection Witnessed By:

X Date

No./Date	Description	Date Insp.

Notes:
*2-20-2019 MH HUD # PFS 319071.

Washburn

Washburn

Map Lot 007-038C | Account 402 | Location 71 EVERETT ROAD | Card 1 Of 1 | 8/23/2023

Building Style **0**		
1.Conv.	5.Garrison	9.Gambrel
2.Ranch	6.Salt Box	10.Other
3.R Ranch	7.Contemp	11.Split
4.Cape	8.Log	12.
Dwelling Units **0**		
Other Units **0**		
Stories **0**		
1.1	4.1.5	7.
2.2	5.1.75	8.
3.3	6.2.5	9.
Exterior Walls **0**		
1.Wood	5.Stucco	9.T-111
2.Vin/Al	6.Brick	10.Other
3.Compos.	7.Stone	11.
4.Asbestos	8.Concrete	12.
Roof Surface **0**		
1.Asphalt	4.Composit	7.
2.Slate	5.Wood	8.
3.Metal	6.Other	9.
SF Masonry Trim **0**		
OPEN-3-CUSTOM **0**		
OPEN-4-CUSTOM **0**		
Year Built **0**		
Year Remodeled **0**		
Foundation **0**		
1.Concrete	4.Wood	7.
2.C Block	5.Slab	8.
3.Br/Stone	6.Piers	9.
Basement **0**		
1.1/4 Bmt	4.Full Bmt	7.
2.1/2 Bmt	5.None	8.
3.3/4 Bmt	6.	9.None
Bsmt Gar # Cars **0**		
Wet Basement **0**		
1.Dry	4.	7.
2.Damp	5.	8.
3.Wet	6.	9.

SF Bsmt Living **0**		
Fin Bsmt Grade **0 0**		
OPEN 5 OPTIONAL **0**		
Heat Type **100%** **0**		
1.HWBB	5.FWA	9.No Heat
2.HWCI	6.GravWA	10.
3.H Pump	7.Electric	11.
4.Steam	8.Fl/Wall	12.
Cool Type **0%**	**9 None**	
1.Refrig	4.W&C Air	7.
2.Evapor	5.	8.
3.H Pump	6.	9.None
Kitchen Style **0**		
1.Modern	4.Obsolete	7.
2.Typical	5.	8.
3.Old Type	6.	9.None
Bath(s) Style **0**		
1.Modern	4.Obsolete	7.
2.Typical	5.	8.
3.Old Type	6.	9.None
# Rooms **0**		
# Bedrooms **0**		
# Full Baths **0**		
# Half Baths **0**		
# Addn Fixtures **0**		
# Fireplaces **0**		

TRIO Software
A Division of Harris Computer Systems

Layout **0**		
1.Typical	4.	7.
2.Inadeq	5.	8.
3.Poor	6.	9.
Attic **0**		
1.1/4 Fin	4.Full Fin	7.
2.1/2 Fin	5.Fl/Stair	8.
3.3/4 Fin	6.	9.None
Insulation **0**		
1.Full	4.Minimal	7.
2.Heavy	5.Partial	8.
3.Capped	6.	9.None
Unfinished % **0%**		
Grade & Factor **0 0%**		
1.E Grade	4.B Grade	7.
2.D Grade	5.A Grade	8.SC Grade
3.C Grade	6.AA Grade	9.Same
SQFT (Footprint) **0**		
Condition **0**		
1.Poor	4.Avg	7.V G
2.Fair	5.Avg+	8.Exc
3.Avg-	6.Good	9.Same
Phys. % Good **0%**		
Funct. % Good **100%**		
Functional Code **9 None**		
1.Incomp	4.Delap	7.No Power
2.O-Built	5.Bsmt	8.LongTerm
3.Damage	6.Common	9.None
Econ. % Good **100%**		
Economic Code **None**		
0.None	3.No Power	7.
1.Location	4.Generate	8.
2.Encroach	9.None	9.
Entrance Code **1 Interior Inspect**		
1.Interior	4.Vacant	7.
2.Refusal	5.Estimate	8.
3.Informed	6.Reviewed	9.
Information Code **1 Owner**		
1.Owner	4.Agent	7.
2.Relative	5.Estimate	8.
3.Tenant	6.Other	9.

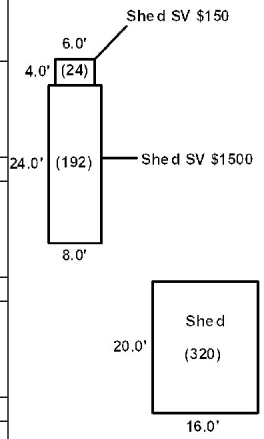

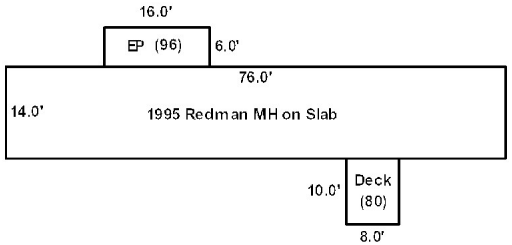

Date Inspected 10/18/2018

Additions, Outbuildings & Improvements

Type	Year	Units	Grade	Cond	Phys.	Funct.	Sound Value
903 Redman	1995	14x76	4 100	6	0 %	100 %	
48 Concrete Slab	1995	1064	3 100	4	0 %	100 %	
68 Wood Deck	2000	80	3 95	4	0 %	100 %	
22 Encl Frame Porch	1998	96	2 110	4	0 %	100 %	
24 Frame Shed	1995	320	2 105	4	0 %	100 %	
24 Frame Shed	0				%	%	1,500
24 Frame Shed	0				%	%	150
					%	%	
					%	%	
					%	%	

1.One Story Fram
2.Two Story Fram
3.Three Story Fr
4.1 & 1/2 Story
5.1 & 3/4 Story
6.2 & 1/2 Story
21.Open Frame Por
22.Encl Frame Por
23.Frame Garage
24.Frame Shed
25.Frame Bay Wind
26.1SFr Overhang
27.Unfin Basement
28.Unfinished Att
29.Finished Attic

Map Lot 007-038D | Account 405 | Location 101 EVERETT ROAD | Card 1 Of 1 | 8/23/2023

FARLEY, WESLEY A
FARLEY, MELINDA M
411 ELLINGTON ROAD
SOUTH WINDSOR CT 06074

B4885P53

Property Data

Neighborhood **1 Neighborhood One**

Tree Growth Year **0**

1ST MORTGAGE **0**

2ND MORTGAGE **0**

Zone/Land Use **1 Residential**

Secondary Zone

Topography **2 Rolling**

1.Level	4.Below St	7.LevelBog
2.Rolling	5.Low	8.
3.Above St	6.Swampy	9.

Utilities **4 Drilled Well** **6 Septic System**

1.Public	4.Dr Well	7.Cesspool
2.Water	5.Dug Well	8.
3.Sewer	6.Septic	9.None

Street **1 Paved**

1.Paved	4.Proposed	7.
2.Semi Imp	5.R/O/W	8.
3.Gravel	6.	9.None

TG PLAN YEAR **0**

Tif District # **0**

Sale Data

Sale Date **11/10/2010**

Price **6,500**

Sale Type **1 Land Only**

1.Land	4.Mobile	7.C/I L&B
2.L & B	5.Other	8.
3.Building	6.C/I Land	9.

Financing

1.Convent	4.Seller	7.
2.FHA/VA	5.Private	8.
3.Assumed	6.Cash	9.Unknown

Validity **1 Arms Length Sale**

1.Valid	4.Split	7.Renovate
2.Related	5.Partial	8.Other
3.Distress	6.Exempt	9.

Verified **5 Public Record**

1.Buyer	4.Agent	7.Family
2.Seller	5.Pub Rec	8.Other
3.Lender	6.MLS	9.

Assessment Record

Year	Land	Buildings	Exempt	Total
2012	13,600	0	0	13,600
2013	17,700	0	0	17,700
2015	17,700	0	0	17,700
2018	20,300	30,900	0	51,200
2019	41,500	41,400	0	82,900
2020	41,500	48,700	0	90,200
2021	41,500	56,900	0	98,400
2022	41,500	65,800	0	107,300
2023	48,300	78,300	0	126,600

Land Data

Front Foot	Type	Effective Frontage	Effective Depth	Influence Factor	Influence Code
11.Regular Lot				%	
12.Delta Triangle				%	
13.Nabla Triangle				%	
14.Rear Land				%	
15.Class I Road				%	
				%	
				%	
Square Foot		**Square Feet**			
16.Class II Road				%	
17.Municipal Rese				%	
18.Munic Sep Lago				%	
19.Gravel Pit				%	
20.Industrial Bas				%	
				%	
				%	
Fract. Acre		**Acreage/Sites**			
21.Developed Pave	21	1.00	100	%	0
22.Undev Paved (F	28	16.00	100	%	0
23.Developed Grav	31	17.00	100	%	0
Acres				%	
24.Undev Gravel (				%	
25.Comm Base Pave				%	
26.Comm Base Grav				%	
27.Backlot				%	
28.Rear Land				%	
29.Pavement				%	

Total Acreage 34.00

Influence Codes

1.Unimproved
2.Excess Frtg
3.Topography
4.Size/Shape
5.Access
6.Restriction
7.Open Space
8.View/Environ
9.Fract Share
Acres
30.Utility R O W
31.Tillable
32.Pasture
33.Orchard
34.Softwood F&O
35.Mixed Wood F&O
36.Hardwood F&O
37.Softwood TG
38.Mixed Wood TG
39.Hardwood TG
40.Wasteland
41.Open Space
42.Mobile Home Si
43.Condo Site
44.Lot Improvemen
45.Subdivision Lo
46.Heavy Ind Sit

Inspection Witnessed By:

X Date

No./Date	Description	Date Insp.

Notes:

Check 2024 for completion
* Added EP assessed at 90% complete for 2022. 5-13-2022 RD
* Dwelling assessed at 70% complete for 2021. 4-7-2021 ED
* Estimated 60% complete at time of inspection. Check completion in 2021.
* Dwelling was assessed at 50% complete at time of reval. Check for completion 2020.

Washburn

Washburn

Map Lot 007-038D | Account 405 | Location 101 EVERETT ROAD | Card 1 Of 1 | 8/23/2023

Building Style	**1 Conventional**	
1.Conv.	5.Garrison	9.Gambrel
2.Ranch	6.Salt Box	10.Other
3.R Ranch	7.Contemp	11.Split
4.Cape	8.Log	12.
Dwelling Units	**1**	
Other Units	**0**	
Stories	**2 Two Story**	
1.1	4.1.5	7.
2.2	5.1.75	8.
3.3	6.2.5	9.
Exterior Walls	**10 Other**	
1.Wood	5.Stucco	9.T-111
2.Vin/Al	6.Brick	10.Other
3.Compos.	7.Stone	11.
4.Asbestos	8.Concrete	12.
Roof Surface	**3 Sheet Metal**	
1.Asphalt	4.Composit	7.
2.Slate	5.Wood	8.
3.Metal	6.Other	9.
SF Masonry Trim	**0**	
OPEN-3-CUSTOM	**0**	
OPEN-4-CUSTOM	**0**	
Year Built	**2016**	
Year Remodeled	**0**	
Foundation	**5 Concrete Slab**	
1.Concrete	4.Wood	7.
2.C Block	5.Slab	8.
3.Br/Stone	6.Piers	9.
Basement	**9 No Basement**	
1.1/4 Bmt	4.Full Bmt	7.
2.1/2 Bmt	5.None	8.
3.3/4 Bmt	6.	9.None
Bsmt Gar # Cars	**0**	
Wet Basement	**9 No Basement**	
1.Dry	4.	7.
2.Damp	5.	8.
3.Wet	6.	9.

SF Bsmt Living	**0**	
Fin Bsmt Grade	**0 0**	
OPEN 5 OPTIONAL	**0**	
Heat Type	**100%**	**9 Not Heated**
1.HWBB	5.FWA	9.No Heat
2.HWCI	6.GravWA	10.
3.H Pump	7.Electric	11.
4.Steam	8.Fl/Wall	12.
Cool Type	**0%**	**9 None**
1.Refrig	4.W&C Air	7.
2.Evapor	5.	8.
3.H Pump	6.	9.None
Kitchen Style	**2 Typical**	
1.Modern	4.Obsolete	7.
2.Typical	5.	8.
3.Old Type	6.	9.None
Bath(s) Style	**2 Typical Bath(s)**	
1.Modern	4.Obsolete	7.
2.Typical	5.	8.
3.Old Type	6.	9.None
# Rooms	**2**	
# Bedrooms	**1**	
# Full Baths	**2**	
# Half Baths	**0**	
# Addn Fixtures	**0**	
# Fireplaces	**0**	

TRIO Software
A Division of Harris Computer Systems

Layout	**1 Typical**	
1.Typical	4.	7.
2.Inadeq	5.	8.
3.Poor	6.	9.
Attic	**9 None**	
1.1/4 Fin	4.Full Fin	7.
2.1/2 Fin	5.Fl/Stair	8.
3.3/4 Fin	6.	9.None
Insulation	**9 None**	
1.Full	4.Minimal	7.
2.Heavy	5.Partial	8.
3.Capped	6.	9.None
Unfinished %	**0%**	
Grade & Factor	**3 Average 100%**	
1.E Grade	4.B Grade	7.
2.D Grade	5.A Grade	8.SC Grade
3.C Grade	6.AA Grade	9.Same
SQFT (Footprint)	**1288**	
Condition	**4 Average**	
1.Poor	4.Avg	7.V G
2.Fair	5.Avg+	8.Exc
3.Avg-	6.Good	9.Same
Phys. % Good	**0%**	
Funct. % Good	**70%**	
Functional Code	**1 Incomplete**	
1.Incomp	4.Delap	7.No Power
2.O-Built	5.Bsmt	8.LongTerm
3.Damage	6.Common	9.None
Econ. % Good	**100%**	
Economic Code	**None**	
0.None	3.No Power	7.
1.Location	4.Generate	8.
2.Encroach	9.None	9.
Entrance Code	**1 Interior Inspect**	
1.Interior	4.Vacant	7.
2.Refusal	5.Estimate	8.
3.Informed	6.Reviewed	9.
Information Code	**2 Relative**	
1.Owner	4.Agent	7.
2.Relative	5.Estimate	8.
3.Tenant	6.Other	9.

Date Inspected 10/18/2018

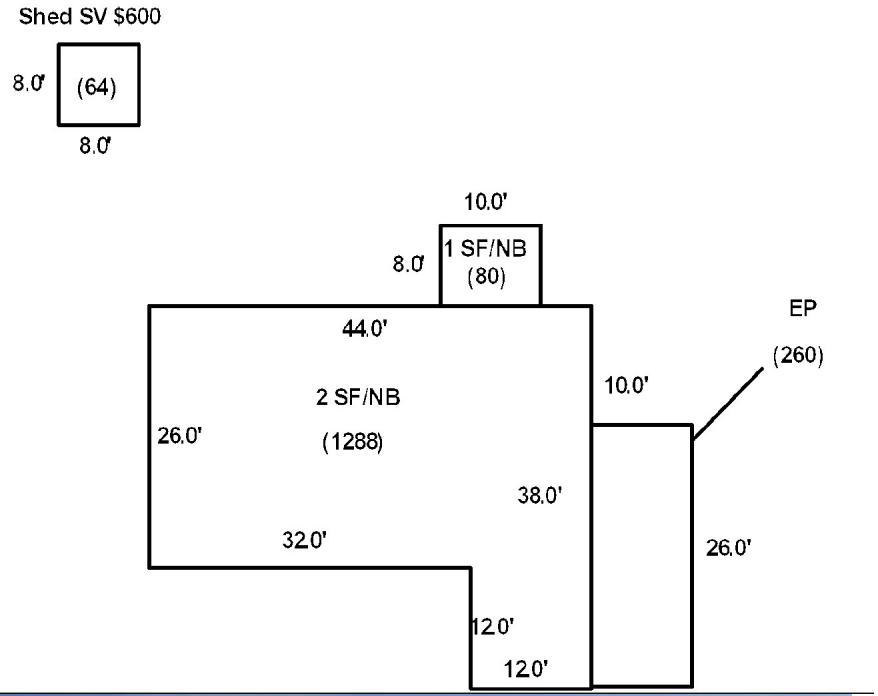

Additions, Outbuildings & Improvements

Type	Year	Units	Grade	Cond	Phys.	Funct.	Sound Value
1 One Story Frame	2016	80	9 100	9	0 %	50 %	
24 Frame Shed	0				%	%	600
22 Encl Frame Porch	2021	260	3 100	4	0 %	90 %	
					%	%	
					%	%	
					%	%	
					%	%	
					%	%	
					%	%	
					%	%	

1.One Story Fram
2.Two Story Fram
3.Three Story Fr
4.1 & 1/2 Story
5.1 & 3/4 Story
6.2 & 1/2 Story
21.Open Frame Por
22.Encl Frame Por
23.Frame Garage
24.Frame Shed
25.Frame Bay Wind
26.1SFr Overhang
27.Unfin Basement
28.Unfinished Att
29.Finished Attic

Map Lot 007-039 Account 786 Location EVERETT ROAD Card 1 Of 1 8/23/2023

FARLEY, MELINDA
FARLEY, WESLEY
411 ELLINGTON ROAD
SOUTH WINDSOR CT 06074

B6424P269

Previous Owner
O'CLAIR, JACQUELINE
P.O. BOX 204

WASHBURN ME 04786
Sale Date: 3/10/2023

Inspection Witnessed By:

X Date

No./Date	Description	Date Insp.

Notes:

Washburn

Property Data

Neighborhood	**1 Neighborhood One**
Tree Growth Year	**0**
1ST MORTGAGE	**0**
2ND MORTGAGE	**0**
Zone/Land Use	**1 Residential**
Secondary Zone	
Topography	**2 Rolling**

1.Level	4.Below St	7.LevelBog
2.Rolling	5.Low	8.
3.Above St	6.Swampy	9.

Utilities

1.Public	4.Dr Well	7.Cesspool
2.Water	5.Dug Well	8.
3.Sewer	6.Septic	9.None

Street **1 Paved**

1.Paved	4.Proposed	7.
2.Semi Imp	5.R/O/W	8.
3.Gravel	6.	9.None

TG PLAN YEAR	**0**
Tif District #	**0**

Sale Data

Sale Date	**3/10/2023**
Price	**10,000**
Sale Type	**1 Land Only**

1.Land	4.Mobile	7.C/I L&B
2.L & B	5.Other	8.
3.Building	6.C/I Land	9.

Financing **1 Conventional**

1.Convent	4.Seller	7.
2.FHA/VA	5.Private	8.
3.Assumed	6.Cash	9.Unknown

Validity **4 Split/Assemblage**

1.Valid	4.Split	7.Renovate
2.Related	5.Partial	8.Other
3.Distress	6.Exempt	9.

Verified **5 Public Record**

1.Buyer	4.Agent	7.Family
2.Seller	5.Pub Rec	8.Other
3.Lender	6.MLS	9.

Assessment Record

Year	Land	Buildings	Exempt	Total
2012	10,500	0	0	10,500
2013	13,700	0	0	13,700
2015	13,700	0	0	13,700
2018	13,700	0	0	13,700
2019	18,100	0	0	18,100
2020	18,100	0	0	18,100
2021	18,100	0	0	18,100
2022	18,100	0	0	18,100
2023	21,100	0	0	21,100

Land Data

Front Foot	Type	Effective Frontage	Effective Depth	Influence Factor	Influence Code
11.Regular Lot				%	
12.Delta Triangle				%	
13.Nabla Triangle				%	
14.Rear Land				%	
15.Class I Road				%	
				%	
				%	
Square Foot		**Square Feet**			
16.Class II Road				%	
17.Municipal Rese				%	
18.Munic Sep Lago				%	
19.Gravel Pit				%	
20.Industrial Bas				%	
				%	
				%	
Fract. Acre		**Acreage/Sites**			
21.Developed Pave	22	1.00	100	%	0
22.Undev Paved (F	31	3.00	100	%	0
23.Developed Grav	28	12.00	100	%	0
Acres	40	2.00	100	%	0
24.Undev Gravel (				%	
25.Comm Base Pave				%	
26.Comm Base Grav				%	
27.Backlot					
28.Rear Land					
29.Pavement					

Total Acreage 18.00

Influence Codes

1.Unimproved
2.Excess Frtg
3.Topography
4.Size/Shape
5.Access
6.Restriction
7.Open Space
8.View/Environ
9.Fract Share
Acres
30.Utility R O W
31.Tillable
32.Pasture
33.Orchard
34.Softwood F&O
35.Mixed Wood F&O
36.Hardwood F&O
37.Softwood TG
38.Mixed Wood TG
39.Hardwood TG
40.Wasteland
41.Open Space
42.Mobile Home Si
43.Condo Site
44.Lot Improvemen
45.Subdivision Lo
46.Heavy Ind Sit

Washburn

Map Lot 007-039 | Account 786 | Location EVERETT ROAD | Card 1 Of 1 | 8/23/2023

Building Style **0**		
1.Conv.	5.Garrison	9.Gambrel
2.Ranch	6.Salt Box	10.Other
3.R Ranch	7.Contemp	11.Split
4.Cape	8.Log	12.
Dwelling Units **0**		
Other Units **0**		
Stories **0**		
1.1	4.1.5	7.
2.2	5.1.75	8.
3.3	6.2.5	9.
Exterior Walls **0**		
1.Wood	5.Stucco	9.T-111
2.Vin/Al	6.Brick	10.Other
3.Compos.	7.Stone	11.
4.Asbestos	8.Concrete	12.
Roof Surface **0**		
1.Asphalt	4.Composit	7.
2.Slate	5.Wood	8.
3.Metal	6.Other	9.
SF Masonry Trim **0**		
OPEN-3-CUSTOM **0**		
OPEN-4-CUSTOM **0**		
Year Built **0**		
Year Remodeled **0**		
Foundation **0**		
1.Concrete	4.Wood	7.
2.C Block	5.Slab	8.
3.Br/Stone	6.Piers	9.
Basement **0**		
1.1/4 Bmt	4.Full Bmt	7.
2.1/2 Bmt	5.None	8.
3.3/4 Bmt	6.	9.None
Bsmt Gar # Cars **0**		
Wet Basement **0**		
1.Dry	4.	7.
2.Damp	5.	8.
3.Wet	6.	9.

SF Bsmt Living **0**		
Fin Bsmt Grade **0 0**		
OPEN 5 OPTIONAL **0**		
Heat Type **100%** **0**		
1.HWBB	5.FWA	9.No Heat
2.HWCI	6.GravWA	10.
3.H Pump	7.Electric	11.
4.Steam	8.Fl/Wall	12.
Cool Type **0%** **9 None**		
1.Refrig	4.W&C Air	7.
2.Evapor	5.	8.
3.H Pump	6.	9.None
Kitchen Style **0**		
1.Modern	4.Obsolete	7.
2.Typical	5.	8.
3.Old Type	6.	9.None
Bath(s) Style **0**		
1.Modern	4.Obsolete	7.
2.Typical	5.	8.
3.Old Type	6.	9.None
# Rooms **0**		
# Bedrooms **0**		
# Full Baths **0**		
# Half Baths **0**		
# Addn Fixtures **0**		
# Fireplaces **0**		

TRIO Software
A Division of Harris Computer Systems

Layout **0**		
1.Typical	4.	7.
2.Inadeq	5.	8.
3.Poor	6.	9.
Attic **0**		
1.1/4 Fin	4.Full Fin	7.
2.1/2 Fin	5.Fl/Stair	8.
3.3/4 Fin	6.	9.None
Insulation **0**		
1.Full	4.Minimal	7.
2.Heavy	5.Partial	8.
3.Capped	6.	9.None
Unfinished % **0%**		
Grade & Factor **0 0%**		
1.E Grade	4.B Grade	7.
2.D Grade	5.A Grade	8.SC Grade
3.C Grade	6.AA Grade	9.Same
SQFT (Footprint) **0**		
Condition **0**		
1.Poor	4.Avg	7.V G
2.Fair	5.Avg+	8.Exc
3.Avg-	6.Good	9.Same
Phys. % Good **0%**		
Funct. % Good **100%**		
Functional Code **9 None**		
1.Incomp	4.Delap	7.No Power
2.O-Built	5.Bsmt	8.LongTerm
3.Damage	6.Common	9.None
Econ. % Good **100%**		
Economic Code **None**		
0.None	3.No Power	7.
1.Location	4.Generate	8.
2.Encroach	9.None	9.
Entrance Code **0**		
1.Interior	4.Vacant	7.
2.Refusal	5.Estimate	8.
3.Informed	6.Reviewed	9.
Information Code **0**		
1.Owner	4.Agent	7.
2.Relative	5.Estimate	8.
3.Tenant	6.Other	9.

Date Inspected

Additions, Outbuildings & Improvements

Type	Year	Units	Grade	Cond	Phys.	Funct.	Sound Value
					%	%	
					%	%	
					%	%	
					%	%	
					%	%	
					%	%	
					%	%	
					%	%	
					%	%	
					%	%	

1.One Story Fram
2.Two Story Fram
3.Three Story Fr
4.1 & 1/2 Story
5.1 & 3/4 Story
6.2 & 1/2 Story
21.Open Frame Por
22.Encl Frame Por
23.Frame Garage
24.Frame Shed
25.Frame Bay Wind
26.1SFr Overhang
27.Unfin Basement
28.Unfinished Att
29.Finished Attic

Map Lot 007-040 Account 169 Location 53 EVERETT ROAD Card 1 Of 1 8/23/2023

BRAGDON, EUGENE H & ANDREA M (LE)
BRAGDON, JASMINE & EMMA
53 EVERETT RD
WASHBURN ME 04786

B6091P126 B6302P139

Previous Owner
BRAGDON, EUGENE H
BRAGDON, ANDREA M
53 EVERETT RD
WASHBURN ME 04786
Sale Date: 11/09/2020

Inspection Witnessed By:

X Date

No./Date	Description	Date Insp.

Notes:
* Life Estate Bk 6091-139 for benefit of Eugene and Andrea Bragdon

Washburn

Property Data

Neighborhood **1 Neighborhood One**

Tree Growth Year **0**

1ST MORTGAGE **0**

2ND MORTGAGE **0**

Zone/Land Use **1 Residential**

Secondary Zone

Topography **1 Level**

1.Level	4.Below St	7.LevelBog
2.Rolling	5.Low	8.
3.Above St	6.Swampy	9.

Utilities **4 Drilled Well** **6 Septic System**

1.Public	4.Dr Well	7.Cesspool
2.Water	5.Dug Well	8.
3.Sewer	6.Septic	9.None

Street **1 Paved**

1.Paved	4.Proposed	7.
2.Semi Imp	5.R/O/W	8.
3.Gravel	6.	9.None

TG PLAN YEAR **0**

Tif District # **0**

Sale Data

Sale Date **11/09/2020**

Price

Sale Type **2 Land & Buildings**

1.Land	4.Mobile	7.C/I L&B
2.L & B	5.Other	8.
3.Building	6.C/I Land	9.

Financing **9 Unknown**

1.Convent	4.Seller	7.
2.FHA/VA	5.Private	8.
3.Assumed	6.Cash	9.Unknown

Validity **2 Related Parties**

1.Valid	4.Split	7.Renovate
2.Related	5.Partial	8.Other
3.Distress	6.Exempt	9.

Verified **5 Public Record**

1.Buyer	4.Agent	7.Family
2.Seller	5.Pub Rec	8.Other
3.Lender	6.MLS	9.

Assessment Record

Year	Land	Buildings	Exempt	Total
2012	9,800	21,100	8,800	22,100
2013	12,700	21,100	8,800	25,000
2015	12,700	21,100	9,000	24,800
2018	12,700	21,100	18,400	15,400
2019	16,800	42,500	20,000	39,300
2020	16,800	30,200	25,000	22,000
2021	16,800	30,600	25,000	22,400
2022	16,800	32,100	25,000	23,900
2023	22,300	38,000	25,000	35,300

Land Data

Front Foot	Type	Effective Frontage	Effective Depth	Influence Factor	Influence Code
11.Regular Lot				%	
12.Delta Triangle				%	
13.Nabla Triangle				%	
14.Rear Land				%	
15.Class I Road				%	
				%	
				%	
Square Foot		**Square Feet**			
16.Class II Road				%	
17.Municipal Rese				%	
18.Munic Sep Lago				%	
19.Gravel Pit				%	
20.Industrial Bas				%	
				%	
				%	
Fract. Acre		**Acreage/Sites**			
21.Developed Pave	21	1.00	100	%	0
22.Undev Paved (F	28	0.60	100	%	0
23.Developed Grav				%	
Acres				%	
24.Undev Gravel (				%	
25.Comm Base Pave				%	
26.Comm Base Grav				%	
27.Backlot				%	
28.Rear Land				%	
29.Pavement				%	

Total Acreage 1.60

Influence Codes

1.Unimproved
2.Excess Frtg
3.Topography
4.Size/Shape
5.Access
6.Restriction
7.Open Space
8.View/Environ
9.Fract Share
Acres
30.Utility R O W
31.Tillable
32.Pasture
33.Orchard
34.Softwood F&O
35.Mixed Wood F&O
36.Hardwood F&O
37.Softwood TG
38.Mixed Wood TG
39.Hardwood TG
40.Wasteland
41.Open Space
42.Mobile Home Si
43.Condo Site
44.Lot Improvemen
45.Subdivision Lo
46.Heavy Ind Sit

Washburn

Map Lot 007-040 | Account 169 | Location 53 EVERETT ROAD | Card 1 Of 1 | 8/23/2023

Building Style	**2 Ranch**		
1.Conv.	5.Garrison	9.Gambrel	
2.Ranch	6.Salt Box	10.Other	
3.R Ranch	7.Contemp	11.Split	
4.Cape	8.Log	12.	
Dwelling Units	**1**		
Other Units	**0**		
Stories	**1 One Story**		
1.1	4.1.5	7.	
2.2	5.1.75	8.	
3.3	6.2.5	9.	
Exterior Walls	**2 Vinyl/Aluminum**		
1.Wood	5.Stucco	9.T-111	
2.Vin/Al	6.Brick	10.Other	
3.Compos.	7.Stone	11.	
4.Asbestos	8.Concrete	12.	
Roof Surface	**1 Asphalt Shingles**		
1.Asphalt	4.Composit	7.	
2.Slate	5.Wood	8.	
3.Metal	6.Other	9.	
SF Masonry Trim	**0**		
OPEN-3-CUSTOM	**0**		
OPEN-4-CUSTOM	**0**		
Year Built	**1950**		
Year Remodeled	**0**		
Foundation	**1 Concrete**		
1.Concrete	4.Wood	7.	
2.C Block	5.Slab	8.	
3.Br/Stone	6.Piers	9.	
Basement	**4 Full Basement**		
1.1/4 Bmt	4.Full Bmt	7.	
2.1/2 Bmt	5.None	8.	
3.3/4 Bmt	6.	9.None	
Bsmt Gar # Cars	**0**		
Wet Basement	**3 Wet Basement**		
1.Dry	4.	7.	
2.Damp	5.	8.	
3.Wet	6.	9.	

SF Bsmt Living	**0**		
Fin Bsmt Grade	**0 0**		
OPEN 5 OPTIONAL	**0**		
Heat Type	**100%**	**5 Forced Warm Air**	
1.HWBB	5.FWA	9.No Heat	
2.HWCI	6.GravWA	10.	
3.H Pump	7.Electric	11.	
4.Steam	8.Fl/Wall	12.	
Cool Type	**0%**	**9 None**	
1.Refrig	4.W&C Air	7.	
2.Evapor	5.	8.	
3.H Pump	6.	9.None	
Kitchen Style	**3 Old Style**		
1.Modern	4.Obsolete	7.	
2.Typical	5.	8.	
3.Old Type	6.	9.None	
Bath(s) Style	**2 Typical Bath(s)**		
1.Modern	4.Obsolete	7.	
2.Typical	5.	8.	
3.Old Type	6.	9.None	
# Rooms	**6**		
# Bedrooms	**3**		
# Full Baths	**1**		
# Half Baths	**0**		
# Addn Fixtures	**0**		
# Fireplaces	**0**		

TRIO Software
A Division of Harris Computer Systems

Layout	**1 Typical**		
1.Typical	4.	7.	
2.Inadeq	5.	8.	
3.Poor	6.	9.	
Attic	**9 None**		
1.1/4 Fin	4.Full Fin	7.	
2.1/2 Fin	5.Fl/Stair	8.	
3.3/4 Fin	6.	9.None	
Insulation	**1 Full**		
1.Full	4.Minimal	7.	
2.Heavy	5.Partial	8.	
3.Capped	6.	9.None	
Unfinished %	**0%**		
Grade & Factor	**1 Low 110%**		
1.E Grade	4.B Grade	7.	
2.D Grade	5.A Grade	8.SC Grade	
3.C Grade	6.AA Grade	9.Same	
SQFT (Footprint)	**832**		
Condition	**4 Average**		
1.Poor	4.Avg	7.V G	
2.Fair	5.Avg+	8.Exc	
3.Avg-	6.Good	9.Same	
Phys. % Good	**0%**		
Funct. % Good	**100%**		
Functional Code	**4 Delapidation**		
1.Incomp	4.Delap	7.No Power	
2.O-Built	5.Bsmt	8.LongTerm	
3.Damage	6.Common	9.None	
Econ. % Good	**100%**		
Economic Code	**None**		
0.None	3.No Power	7.	
1.Location	4.Generate	8.	
2.Encroach	9.None	9.	
Entrance Code	**1 Interior Inspect**		
1.Interior	4.Vacant	7.	
2.Refusal	5.Estimate	8.	
3.Informed	6.Reviewed	9.	
Information Code	**1 Owner**		
1.Owner	4.Agent	7.	
2.Relative	5.Estimate	8.	
3.Tenant	6.Other	9.	

Date Inspected 10/18/2018

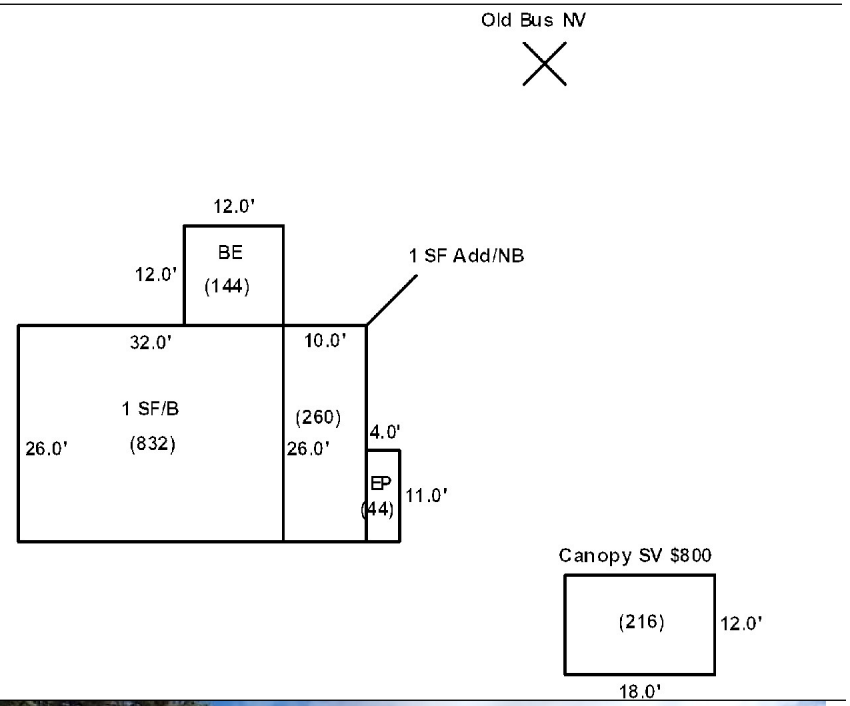

Additions, Outbuildings & Improvements

Type	Year	Units	Grade	Cond	Phys.	Funct.	Sound Value
40 Basement Entry	1950	144	2 110	4	0 %	100 %	
1 One Story Frame	1965	260	2 110	4	0 %	100 %	
22 Encl Frame Porch	1975	44	2 105	3	0 %	100 %	
61 Canopy	0				%	%	800
					%	%	
					%	%	
					%	%	
					%	%	
					%	%	
					%	%	

1.One Story Fram
2.Two Story Fram
3.Three Story Fr
4.1 & 1/2 Story
5.1 & 3/4 Story
6.2 & 1/2 Story
21.Open Frame Por
22.Encl Frame Por
23.Frame Garage
24.Frame Shed
25.Frame Bay Wind
26.1SFr Overhang
27.Unfin Basement
28.Unfinished Att
29.Finished Attic

Map Lot 007-041 | Account 400 | Location EVERETT ROAD | Card 1 Of 1 | 8/23/2023

FARLEY, MELINDA
FARLEY, WESLEY
411 ELLINGTON ROAD
SOUTH WINDSOR CT 06074

B6424P269

Previous Owner
O'CLAIR, JACQLIN
P.O. BOX 204

WASHBURN ME 04786
Sale Date: 3/10/2023

Previous Owner
Drost, Leland
42 Everett Road

Washburn ME
Sale Date: 4/01/2007

Previous Owner
Boyce, David
89 Eight Iron Circle

Mulberry FL 33860
Sale Date: 1/19/2007

Inspection Witnessed By:

X Date

No./Date	Description	Date Insp.

Notes:

Washburn

Property Data

Neighborhood	**1 Neighborhood One**
Tree Growth Year	**0**
1ST MORTGAGE	**0**
2ND MORTGAGE	**0**
Zone/Land Use	**1 Residential**
Secondary Zone	
Topography	**2 Rolling**

1.Level	4.Below St	7.LevelBog
2.Rolling	5.Low	8.
3.Above St	6.Swampy	9.

Utilities

1.Public	4.Dr Well	7.Cesspool
2.Water	5.Dug Well	8.
3.Sewer	6.Septic	9.None

Street **1 Paved**

1.Paved	4.Proposed	7.
2.Semi Imp	5.R/O/W	8.
3.Gravel	6.	9.None

TG PLAN YEAR	**0**
Tif District #	**0**

Sale Data

Sale Date	**3/10/2023**
Price	**10,000**
Sale Type	**1 Land Only**

1.Land	4.Mobile	7.C/I L&B
2.L & B	5.Other	8.
3.Building	6.C/I Land	9.

Financing **9 Unknown**

1.Convent	4.Seller	7.
2.FHA/VA	5.Private	8.
3.Assumed	6.Cash	9.Unknown

Validity **4 Split/Assemblage**

1.Valid	4.Split	7.Renovate
2.Related	5.Partial	8.Other
3.Distress	6.Exempt	9.

Verified **5 Public Record**

1.Buyer	4.Agent	7.Family
2.Seller	5.Pub Rec	8.Other
3.Lender	6.MLS	9.

Assessment Record

Year	Land	Buildings	Exempt	Total
2012	3,400	0	0	3,400
2013	4,400	0	0	4,400
2015	4,400	0	0	4,400
2018	4,400	0	0	4,400
2019	10,500	0	0	10,500
2020	10,500	0	0	10,500
2021	10,500	0	0	10,500
2022	10,500	0	0	10,500
2023	12,700	0	0	12,700

Land Data

Front Foot	Type	Effective Frontage	Effective Depth	Influence Factor	Influence Code
11.Regular Lot				%	
12.Delta Triangle				%	
13.Nabla Triangle				%	
14.Rear Land				%	
15.Class I Road				%	
				%	
				%	
Square Foot		**Square Feet**			
16.Class II Road				%	
17.Municipal Rese				%	
18.Munic Sep Lago				%	
19.Gravel Pit				%	
20.Industrial Bas				%	
				%	
				%	
Fract. Acre		**Acreage/Sites**			
21.Developed Pave	22	1.00	100	%	0
22.Undev Paved (F	28	3.00	100	%	0
23.Developed Grav				%	
Acres				%	
24.Undev Gravel (				%	
25.Comm Base Pave				%	
26.Comm Base Grav				%	
27.Backlot				%	
28.Rear Land				%	
29.Pavement				%	

Total Acreage 4.00

Influence Codes

1.Unimproved
2.Excess Frtg
3.Topography
4.Size/Shape
5.Access
6.Restriction
7.Open Space
8.View/Environ
9.Fract Share
Acres
30.Utility R O W
31.Tillable
32.Pasture
33.Orchard
34.Softwood F&O
35.Mixed Wood F&O
36.Hardwood F&O
37.Softwood TG
38.Mixed Wood TG
39.Hardwood TG
40.Wasteland
41.Open Space
42.Mobile Home Si
43.Condo Site
44.Lot Improvemen
45.Subdivision Lo
46.Heavy Ind Sit

Washburn

Map Lot 007-041 | Account 400 | Location EVERETT ROAD | Card 1 Of 1 | 8/23/2023

Building Style **0**		
1.Conv.	5.Garrison	9.Gambrel
2.Ranch	6.Salt Box	10.Other
3.R Ranch	7.Contemp	11.Split
4.Cape	8.Log	12.
Dwelling Units **0**		
Other Units **0**		
Stories **0**		
1.1	4.1.5	7.
2.2	5.1.75	8.
3.3	6.2.5	9.
Exterior Walls **0**		
1.Wood	5.Stucco	9.T-111
2.Vin/Al	6.Brick	10.Other
3.Compos.	7.Stone	11.
4.Asbestos	8.Concrete	12.
Roof Surface **0**		
1.Asphalt	4.Composit	7.
2.Slate	5.Wood	8.
3.Metal	6.Other	9.
SF Masonry Trim **0**		
OPEN-3-CUSTOM **0**		
OPEN-4-CUSTOM **0**		
Year Built **0**		
Year Remodeled **0**		
Foundation **0**		
1.Concrete	4.Wood	7.
2.C Block	5.Slab	8.
3.Br/Stone	6.Piers	9.
Basement **0**		
1.1/4 Bmt	4.Full Bmt	7.
2.1/2 Bmt	5.None	8.
3.3/4 Bmt	6.	9.None
Bsmt Gar # Cars **0**		
Wet Basement **0**		
1.Dry	4.	7.
2.Damp	5.	8.
3.Wet	6.	9.

SF Bsmt Living **0**		
Fin Bsmt Grade **0 0**		
OPEN 5 OPTIONAL **0**		
Heat Type **100%** **0**		
1.HWBB	5.FWA	9.No Heat
2.HWCI	6.GravWA	10.
3.H Pump	7.Electric	11.
4.Steam	8.Fl/Wall	12.
Cool Type **0%** **9 None**		
1.Refrig	4.W&C Air	7.
2.Evapor	5.	8.
3.H Pump	6.	9.None
Kitchen Style **0**		
1.Modern	4.Obsolete	7.
2.Typical	5.	8.
3.Old Type	6.	9.None
Bath(s) Style **0**		
1.Modern	4.Obsolete	7.
2.Typical	5.	8.
3.Old Type	6.	9.None
# Rooms **0**		
# Bedrooms **0**		
# Full Baths **0**		
# Half Baths **0**		
# Addn Fixtures **0**		
# Fireplaces **0**		

TRIO Software
A Division of Harris Computer Systems

Layout **0**		
1.Typical	4.	7.
2.Inadeq	5.	8.
3.Poor	6.	9.
Attic **0**		
1.1/4 Fin	4.Full Fin	7.
2.1/2 Fin	5.Fl/Stair	8.
3.3/4 Fin	6.	9.None
Insulation **0**		
1.Full	4.Minimal	7.
2.Heavy	5.Partial	8.
3.Capped	6.	9.None
Unfinished % **0%**		
Grade & Factor **0 0%**		
1.E Grade	4.B Grade	7.
2.D Grade	5.A Grade	8.SC Grade
3.C Grade	6.AA Grade	9.Same
SQFT (Footprint) **0**		
Condition **0**		
1.Poor	4.Avg	7.V G
2.Fair	5.Avg+	8.Exc
3.Avg-	6.Good	9.Same
Phys. % Good **0%**		
Funct. % Good **100%**		
Functional Code **9 None**		
1.Incomp	4.Delap	7.No Power
2.O-Built	5.Bsmt	8.LongTerm
3.Damage	6.Common	9.None
Econ. % Good **100%**		
Economic Code **None**		
0.None	3.No Power	7.
1.Location	4.Generate	8.
2.Encroach	9.None	9.
Entrance Code **0**		
1.Interior	4.Vacant	7.
2.Refusal	5.Estimate	8.
3.Informed	6.Reviewed	9.
Information Code **0**		
1.Owner	4.Agent	7.
2.Relative	5.Estimate	8.
3.Tenant	6.Other	9.

Date Inspected

Additions, Outbuildings & Improvements

Type	Year	Units	Grade	Cond	Phys.	Funct.	Sound Value
					%	%	
					%	%	
					%	%	
					%	%	
					%	%	
					%	%	
					%	%	
					%	%	
					%	%	
					%	%	

1.One Story Fram
2.Two Story Fram
3.Three Story Fr
4.1 & 1/2 Story
5.1 & 3/4 Story
6.2 & 1/2 Story
21.Open Frame Por
22.Encl Frame Por
23.Frame Garage
24.Frame Shed
25.Frame Bay Wind
26.1SFr Overhang
27.Unfin Basement
28.Unfinished Att
29.Finished Attic

Map Lot 007-041A | Account 1098 | Location EVERETT ROAD | Card 1 Of 1 | 8/23/2023

FARLEY, MELINDA
FARLEY, WESLEY
411 ELLINGTON ROAD
SOUTH WINDSOR CT 06074

B6424P269

Previous Owner
O'CLAIR, JACQLIN
P.O. BOX 204

WASHBURN ME 04786
Sale Date: 3/10/2023

Previous Owner
Drost, Rena
42 Everett Road

Wasburn ME 04786
Sale Date: 5/01/2007

Inspection Witnessed By:

X Date

No./Date	Description	Date Insp.

Notes:

Washburn

Property Data

Neighborhood	**1 Neighborhood One**
Tree Growth Year	**0**
1ST MORTGAGE	**0**
2ND MORTGAGE	**0**
Zone/Land Use	**1 Residential**
Secondary Zone	
Topography	**1 Level**

1.Level	4.Below St	7.LevelBog
2.Rolling	5.Low	8.
3.Above St	6.Swampy	9.

Utilities

1.Public	4.Dr Well	7.Cesspool
2.Water	5.Dug Well	8.
3.Sewer	6.Septic	9.None

Street **1 Paved**

1.Paved	4.Proposed	7.
2.Semi Imp	5.R/O/W	8.
3.Gravel	6.	9.None

TG PLAN YEAR	**0**
Tif District #	**0**

Sale Data

Sale Date	**3/10/2023**
Price	**10,000**
Sale Type	**1 Land Only**

1.Land	4.Mobile	7.C/I L&B
2.L & B	5.Other	8.
3.Building	6.C/I Land	9.

Financing **9 Unknown**

1.Convent	4.Seller	7.
2.FHA/VA	5.Private	8.
3.Assumed	6.Cash	9.Unknown

Validity **4 Split/Assemblage**

1.Valid	4.Split	7.Renovate
2.Related	5.Partial	8.Other
3.Distress	6.Exempt	9.

Verified **5 Public Record**

1.Buyer	4.Agent	7.Family
2.Seller	5.Pub Rec	8.Other
3.Lender	6.MLS	9.

Assessment Record

Year	Land	Buildings	Exempt	Total
2012	1,000	0	0	1,000
2013	1,300	0	0	1,300
2015	1,300	0	0	1,300
2018	1,300	0	0	1,300
2019	4,100	0	0	4,100
2020	1,000	0	0	1,000
2021	1,000	0	0	1,000
2022	1,000	0	0	1,000
2023	1,300	0	0	1,300

Land Data

Front Foot	Type	Effective Frontage	Effective Depth	Influence Factor	Influence Code
11.Regular Lot				%	
12.Delta Triangle				%	
13.Nabla Triangle				%	
14.Rear Land				%	
15.Class I Road				%	
				%	
				%	
Square Foot		**Square Feet**			
16.Class II Road				%	
17.Municipal Rese				%	
18.Munic Sep Lago				%	
19.Gravel Pit				%	
20.Industrial Bas				%	
				%	
				%	
Fract. Acre		**Acreage/Sites**			
21.Developed Pave	22	0.21		25 %	4
22.Undev Paved (F				%	
23.Developed Grav				%	
Acres				%	
24.Undev Gravel (				%	
25.Comm Base Pave				%	
26.Comm Base Grav				%	
27.Backlot				%	
28.Rear Land				%	
29.Pavement				%	

Total Acreage 0.21

Influence Codes

1.Unimproved
2.Excess Frtg
3.Topography
4.Size/Shape
5.Access
6.Restriction
7.Open Space
8.View/Environ
9.Fract Share
Acres
30.Utility R O W
31.Tillable
32.Pasture
33.Orchard
34.Softwood F&O
35.Mixed Wood F&O
36.Hardwood F&O
37.Softwood TG
38.Mixed Wood TG
39.Hardwood TG
40.Wasteland
41.Open Space
42.Mobile Home Si
43.Condo Site
44.Lot Improvemen
45.Subdivision Lo
46.Heavy Ind Sit

Washburn

Map Lot 007-041A | Account 1098 | Location EVERETT ROAD | Card 1 Of 1 | 8/23/2023

Building Style		
1.Conv.	5.Garrison	9.Gambrel
2.Ranch	6.Salt Box	10.Other
3.R Ranch	7.Contemp	11.Split
4.Cape	8.Log	12.

Dwelling Units

Other Units

Stories		
1.1	4.1.5	7.
2.2	5.1.75	8.
3.3	6.2.5	9.

Exterior Walls		
1.Wood	5.Stucco	9.T-111
2.Vin/Al	6.Brick	10.Other
3.Compos.	7.Stone	11.
4.Asbestos	8.Concrete	12.

Roof Surface		
1.Asphalt	4.Composit	7.
2.Slate	5.Wood	8.
3.Metal	6.Other	9.

SF Masonry Trim

OPEN-3-CUSTOM

OPEN-4-CUSTOM

Year Built

Year Remodeled

Foundation		
1.Concrete	4.Wood	7.
2.C Block	5.Slab	8.
3.Br/Stone	6.Piers	9.

Basement		
1.1/4 Bmt	4.Full Bmt	7.
2.1/2 Bmt	5.None	8.
3.3/4 Bmt	6.	9.None

Bsmt Gar # Cars

Wet Basement		
1.Dry	4.	7.
2.Damp	5.	8.
3.Wet	6.	9.

SF Bsmt Living

Fin Bsmt Grade

OPEN 5 OPTIONAL

Heat Type **100%**		
1.HWBB	5.FWA	9.No Heat
2.HWCI	6.GravWA	10.
3.H Pump	7.Electric	11.
4.Steam	8.Fl/Wall	12.

Cool Type **0%**		
1.Refrig	4.W&C Air	7.
2.Evapor	5.	8.
3.H Pump	6.	9.None

Kitchen Style		
1.Modern	4.Obsolete	7.
2.Typical	5.	8.
3.Old Type	6.	9.None

Bath(s) Style		
1.Modern	4.Obsolete	7.
2.Typical	5.	8.
3.Old Type	6.	9.None

Rooms

Bedrooms

Full Baths

Half Baths

Addn Fixtures

Fireplaces

TRIO Software
A Division of Harris Computer Systems

Layout		
1.Typical	4.	7.
2.Inadeq	5.	8.
3.Poor	6.	9.

Attic		
1.1/4 Fin	4.Full Fin	7.
2.1/2 Fin	5.Fl/Stair	8.
3.3/4 Fin	6.	9.None

Insulation		
1.Full	4.Minimal	7.
2.Heavy	5.Partial	8.
3.Capped	6.	9.None

Unfinished %

Grade & Factor		
1.E Grade	4.B Grade	7.
2.D Grade	5.A Grade	8.SC Grade
3.C Grade	6.AA Grade	9.Same

SQFT (Footprint)

Condition		
1.Poor	4.Avg	7.V G
2.Fair	5.Avg+	8.Exc
3.Avg-	6.Good	9.Same

Phys. % Good

Funct. % Good

Functional Code		
1.Incomp	4.Delap	7.No Power
2.O-Built	5.Bsmt	8.LongTerm
3.Damage	6.Common	9.None

Econ. % Good

Economic Code		
0.None	3.No Power	7.
1.Location	4.Generate	8.
2.Encroach	9.None	9.

Entrance Code **0**		
1.Interior	4.Vacant	7.
2.Refusal	5.Estimate	8.
3.Informed	6.Reviewed	9.

Information Code **0**		
1.Owner	4.Agent	7.
2.Relative	5.Estimate	8.
3.Tenant	6.Other	9.

Date Inspected

Additions, Outbuildings & Improvements

Type	Year	Units	Grade	Cond	Phys.	Funct.	Sound Value
					%	%	
					%	%	
					%	%	
					%	%	
					%	%	
					%	%	
					%	%	
					%	%	
					%	%	
					%	%	

1.One Story Fram
2.Two Story Fram
3.Three Story Fr
4.1 & 1/2 Story
5.1 & 3/4 Story
6.2 & 1/2 Story
21.Open Frame Por
22.Encl Frame Por
23.Frame Garage
24.Frame Shed
25.Frame Bay Wind
26.1SFr Overhang
27.Unfin Basement
28.Unfinished Att
29.Finished Attic

Map Lot 007-042 Account 787 Location 33 EVERETT ROAD Card 1 Of 1 8/23/2023

O'CLAIR, JACQUELINE G
P.O. BOX 204
WASHBURN ME 04786

B2157P178

Property Data

Neighborhood **1 Neighborhood One**

Tree Growth Year **0**

1ST MORTGAGE **0**

2ND MORTGAGE **0**

Zone/Land Use **1 Residential**

Secondary Zone

Topography **1 Level**

1.Level	4.Below St	7.LevelBog
2.Rolling	5.Low	8.
3.Above St	6.Swampy	9.

Utilities **4 Drilled Well** **6 Septic System**

1.Public	4.Dr Well	7.Cesspool
2.Water	5.Dug Well	8.
3.Sewer	6.Septic	9.None

Street **1 Paved**

1.Paved	4.Proposed	7.
2.Semi Imp	5.R/O/W	8.
3.Gravel	6.	9.None

TG PLAN YEAR **0**

Tif District # **0**

Sale Data

Sale Date **2/03/1989**

Price

Sale Type **2 Land & Buildings**

1.Land	4.Mobile	7.C/I L&B
2.L & B	5.Other	8.
3.Building	6.C/I Land	9.

Financing

1.Convent	4.Seller	7.
2.FHA/VA	5.Private	8.
3.Assumed	6.Cash	9.Unknown

Validity **1 Arms Length Sale**

1.Valid	4.Split	7.Renovate
2.Related	5.Partial	8.Other
3.Distress	6.Exempt	9.

Verified **5 Public Record**

1.Buyer	4.Agent	7.Family
2.Seller	5.Pub Rec	8.Other
3.Lender	6.MLS	9.

Assessment Record

Year	Land	Buildings	Exempt	Total
2012	4,300	25,100	14,080	15,320
2013	5,600	25,100	14,080	16,620
2015	5,600	25,100	14,400	16,300
2018	5,600	25,100	23,920	6,780
2019	10,900	64,600	26,000	49,500
2020	10,900	64,400	31,000	44,300
2021	10,900	64,600	31,000	44,500
2022	10,900	67,800	31,000	47,700
2023	14,600	80,700	31,000	64,300

Land Data

Front Foot	Type	Effective Frontage	Effective Depth	Influence Factor	Influence Code
11.Regular Lot				%	
12.Delta Triangle				%	
13.Nabla Triangle				%	
14.Rear Land				%	
15.Class I Road				%	
				%	
				%	
Square Foot		**Square Feet**			
16.Class II Road				%	
17.Municipal Rese				%	
18.Munic Sep Lago				%	
19.Gravel Pit				%	
20.Industrial Bas				%	
				%	
				%	
Fract. Acre		**Acreage/Sites**			
21.Developed Pave	21	0.44		100 %	0
22.Undev Paved (F				%	
23.Developed Grav				%	
Acres				%	
24.Undev Gravel (				%	
25.Comm Base Pave				%	
26.Comm Base Grav				%	
27.Backlot				%	
28.Rear Land				%	
29.Pavement				%	

Total Acreage 0.44

Influence Codes

1.Unimproved
2.Excess Frtg
3.Topography
4.Size/Shape
5.Access
6.Restriction
7.Open Space
8.View/Environ
9.Fract Share
Acres
30.Utility R O W
31.Tillable
32.Pasture
33.Orchard
34.Softwood F&O
35.Mixed Wood F&O
36.Hardwood F&O
37.Softwood TG
38.Mixed Wood TG
39.Hardwood TG
40.Wasteland
41.Open Space
42.Mobile Home Si
43.Condo Site
44.Lot Improvemen
45.Subdivision Lo
46.Heavy Ind Sit

Inspection Witnessed By:

X Date

No./Date	Description	Date Insp.

Notes:
*2-20-2019 -15% for attached garage.

Washburn

Washburn

Map Lot 007-042 | Account 787 | Location 33 EVERETT ROAD | Card 1 Of 1 | 8/23/2023

Building Style	**4 Cape Cod**		
1.Conv.	5.Garrison	9.Gambrel	
2.Ranch	6.Salt Box	10.Other	
3.R Ranch	7.Contemp	11.Split	
4.Cape	8.Log	12.	
Dwelling Units	**1**		
Other Units	**0**		
Stories	**4 One & 1/2 Story**		
1.1	4.1.5	7.	
2.2	5.1.75	8.	
3.3	6.2.5	9.	
Exterior Walls	**2 Vinyl/Aluminum**		
1.Wood	5.Stucco	9.T-111	
2.Vin/Al	6.Brick	10.Other	
3.Compos.	7.Stone	11.	
4.Asbestos	8.Concrete	12.	
Roof Surface	**3 Sheet Metal**		
1.Asphalt	4.Composit	7.	
2.Slate	5.Wood	8.	
3.Metal	6.Other	9.	
SF Masonry Trim	**0**		
OPEN-3-CUSTOM	**0**		
OPEN-4-CUSTOM	**0**		
Year Built	**1950**		
Year Remodeled	**0**		
Foundation	**1 Concrete**		
1.Concrete	4.Wood	7.	
2.C Block	5.Slab	8.	
3.Br/Stone	6.Piers	9.	
Basement	**4 Full Basement**		
1.1/4 Bmt	4.Full Bmt	7.	
2.1/2 Bmt	5.None	8.	
3.3/4 Bmt	6.	9.None	
Bsmt Gar # Cars	**0**		
Wet Basement	**2 Damp Basement**		
1.Dry	4.	7.	
2.Damp	5.	8.	
3.Wet	6.	9.	

SF Bsmt Living	**0**		
Fin Bsmt Grade	**0 0**		
OPEN 5 OPTIONAL	**0**		
Heat Type	**100%**	**1 Hot Water BB**	
1.HWBB	5.FWA	9.No Heat	
2.HWCI	6.GravWA	10.	
3.H Pump	7.Electric	11.	
4.Steam	8.Fl/Wall	12.	
Cool Type	**0%**	**9 None**	
1.Refrig	4.W&C Air	7.	
2.Evapor	5.	8.	
3.H Pump	6.	9.None	
Kitchen Style	**2 Typical**		
1.Modern	4.Obsolete	7.	
2.Typical	5.	8.	
3.Old Type	6.	9.None	
Bath(s) Style	**2 Typical Bath(s)**		
1.Modern	4.Obsolete	7.	
2.Typical	5.	8.	
3.Old Type	6.	9.None	
# Rooms	**7**		
# Bedrooms	**4**		
# Full Baths	**1**		
# Half Baths	**0**		
# Addn Fixtures	**0**		
# Fireplaces	**0**		

TRIO Software
A Division of Harris Computer Systems

Layout	**1 Typical**		
1.Typical	4.	7.	
2.Inadeq	5.	8.	
3.Poor	6.	9.	
Attic	**9 None**		
1.1/4 Fin	4.Full Fin	7.	
2.1/2 Fin	5.Fl/Stair	8.	
3.3/4 Fin	6.	9.None	
Insulation	**1 Full**		
1.Full	4.Minimal	7.	
2.Heavy	5.Partial	8.	
3.Capped	6.	9.None	
Unfinished %	**0%**		
Grade & Factor	**2 Fair 110%**		
1.E Grade	4.B Grade	7.	
2.D Grade	5.A Grade	8.SC Grade	
3.C Grade	6.AA Grade	9.Same	
SQFT (Footprint)	**650**		
Condition	**5 Above Average**		
1.Poor	4.Avg	7.V G	
2.Fair	5.Avg+	8.Exc	
3.Avg-	6.Good	9.Same	
Phys. % Good	**0%**		
Funct. % Good	**100%**		
Functional Code	**9 None**		
1.Incomp	4.Delap	7.No Power	
2.O-Built	5.Bsmt	8.LongTerm	
3.Damage	6.Common	9.None	
Econ. % Good	**100%**		
Economic Code	**None**		
0.None	3.No Power	7.	
1.Location	4.Generate	8.	
2.Encroach	9.None	9.	
Entrance Code	**1 Interior Inspect**		
1.Interior	4.Vacant	7.	
2.Refusal	5.Estimate	8.	
3.Informed	6.Reviewed	9.	
Information Code	**1 Owner**		
1.Owner	4.Agent	7.	
2.Relative	5.Estimate	8.	
3.Tenant	6.Other	9.	

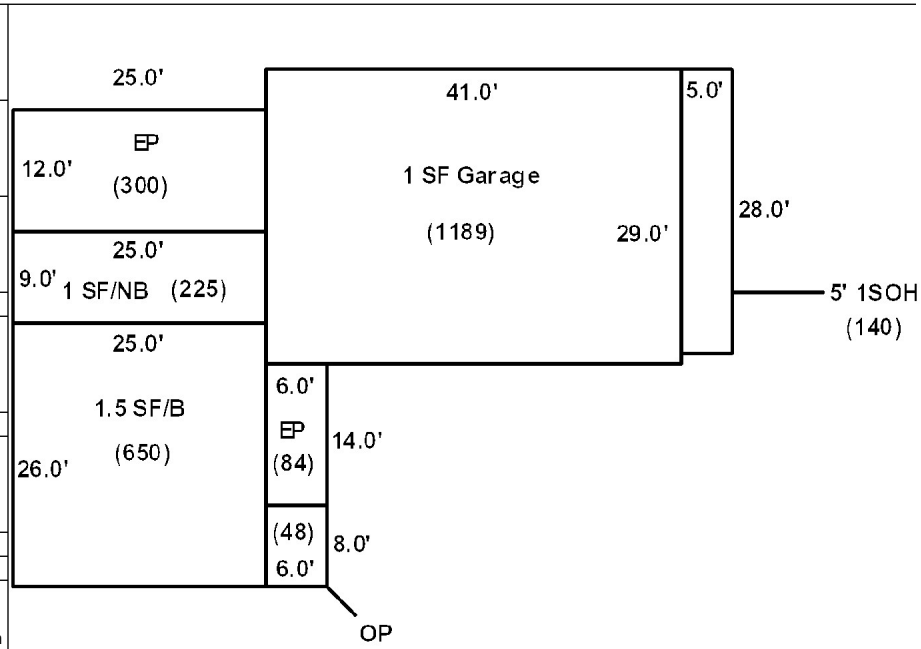

Date Inspected 10/18/2018

Additions, Outbuildings & Improvements

Type	Year	Units	Grade	Cond	Phys.	Funct.	Sound Value
21 Open Frame	1970	48	2 105	4	0 %	100 %	
22 Encl Frame Porch	1960	84	2 105	4	0 %	100 %	
1 One Story Frame	1950	225	2 110	4	0 %	100 %	
22 Encl Frame Porch	2004	300	2 90	3	0 %	100 %	
23 Frame Garage	1970	1189	2 110	3	0 %	85 %	
26 1SFr Overhang	1970	140	2 90	2	0 %	100 %	
					%	%	
					%	%	
					%	%	
					%	%	

1.One Story Fram
2.Two Story Fram
3.Three Story Fr
4.1 & 1/2 Story
5.1 & 3/4 Story
6.2 & 1/2 Story
21.Open Frame Por
22.Encl Frame Por
23.Frame Garage
24.Frame Shed
25.Frame Bay Wind
26.1SFr Overhang
27.Unfin Basement
28.Unfinished Att
29.Finished Attic