Map Lot 003-001 Account 163 Location 46 Reed Lane Card 1 Of 1 8/29/2023

Reed, Jackie
REED, JARED
46 Reed Lane
Wade ME 04786

B6430P99

## Property Data

Neighborhood **1 Rural**

Tree Growth Year **0**

X Coordinate

Y Coordinate

Zone/Land Use **1 Residential**

Secondary Zone

Topography **2 Rolling**

| | | |
|---|---|---|
| 1.Level | 4.Below Stre | 7.Steep |
| 2.Rolling | 5.Low | 8.Rough |
| 3.Above Stre | 6.Swampy | 9. |

Utilities **1 Drilled Well / Septic**

| | | |
|---|---|---|
| 1.Well+Septi | 4.Public Wat | 7.Cess Pool |
| 2.Drilled We | 5.Public Sew | 8.Holding Ta |
| 3.Septic Sys | 6.Dug Well | 9.NoW/NoSew |

Street **3 Gravel**

| | | |
|---|---|---|
| 1.Paved | 4.Proposed | 7. |
| 2.Semi-Impro | 5.Private | 8. |
| 3.Gravel | 6. | 9.No Street |

LAND USE **0**

Building Use **0**

## Sale Data

Sale Date

Price

Sale Type **2 Land & Building**

| | | |
|---|---|---|
| 1.Land | 4.Mobile | 7.C/I L&B |
| 2.L & B | 5.Other | 8. |
| 3.Building | 6.C/I Land | 9. |

Financing

| | | |
|---|---|---|
| 1.Convent | 4.Seller | 7. |
| 2.FHA/VA | 5.Private | 8. |
| 3.Assumed | 6.Cash | 9.Unknown |

Validity **2 Related Parties**

| | | |
|---|---|---|
| 1.Valid | 4.Split | 7.Renovate |
| 2.Related | 5.Partial | 8.Other |
| 3.Distress | 6.Exempt | 9. |

Verified

| | | |
|---|---|---|
| 1.Buyer | 4.Agent | 7.Family |
| 2.Seller | 5.Pub Rec | 8.Other |
| 3.Lender | 6.MLS | 9. |

## Assessment Record

| Year | Land | Buildings | Exempt | Total |
|---|---|---|---|---|
| 2017 | 11,900 | 46,700 | 26,000 | 32,600 |
| 2018 | 11,900 | 46,700 | 26,000 | 32,600 |
| 2020 | 11,900 | 46,700 | 31,000 | 27,600 |
| 2021 | 12,900 | 46,700 | 31,000 | 28,600 |
| 2022 | 19,500 | 69,700 | 31,000 | 58,200 |
| 2023 | 19,500 | 69,700 | 31,000 | 58,200 |

## Land Data

| Front Foot | Type | Effective Frontage | Effective Depth | Influence Factor | Influence Code |
|---|---|---|---|---|---|
| 11.Regular Lot | | | | % | |
| 12.Delta Triangle | | | | % | |
| 13.Nabla Triangle | | | | % | |
| 14.Rear Land | | | | % | |
| 15.Class I Road | | | | % | |
| | | | | % | |
| | | | | % | |
| **Square Foot** | | **Square Feet** | | | |
| 16.Class II Road | | | | % | |
| 17.Municipal Rese | | | | % | |
| 18.Munic Sep Lago | | | | % | |
| 19.Gravel Pit | | | | % | |
| 20.Industrial Bas | | | | % | |
| | | | | % | |
| | | | | % | |
| **Fract. Acre** | | **Acreage/Sites** | | | |
| 21.Developed Pave | 23 | | 1.00 | 100 % | 0 |
| 22.Undev Paved (F | | | | % | |
| 23.Developed Grav | | | | % | |
| **Acres** | | | | % | |
| 24.Undev Gravel ( | | | | % | |
| 26.Rear Land | | | | % | |
| 27.Backlot | | | | % | |
| 29.Pavement | | | | % | |
| 30.Utility R O W | | | | % | |
| 31.Tillable | | | | % | |

**Total Acreage** 1.00

### Influence Codes

1.Vacancy
2.Unimproved
3.Topography
4.Size/Shape
5.Access
6.Restriction
7.Corner/Locatio
8.View/Environme
9.Fractional Sha
**Acres**
32.Pasture
33.Orchard
34.Softwood (FL)
35.Mixed Wood (FL
36.Hardwood (FL)
37.Softwood (TG)
38.Mixed Wood (TG
39.Hardwood (TG)
40.Wasteland
41.Open Space
42.Mobile Home Si
43.Condo Site
44.Lot Improvemen
45.Subdivision Lo
46.Heavy Ind Sit

Inspection Witnessed By:

X Date

| No./Date | Description | Date Insp. |
|---|---|---|
| | | |
| | | |
| | | |

Notes:

**Wade**

# Wade

Map Lot 003-001 | Account 163 | Location 46 Reed Lane | Card 1 Of 1 | 8/29/2023

| | | |
|---|---|---|
| Building Style | **1 CONVENTIONAL** | |
| 1.CONVENTI | 5.GARRISON | 9.GAMBREL |
| 2.RANCH | 6.SALT BOX | 10.OTHER |
| 3.RAISED R | 7.CONTEMP | 11.SPLIT |
| 4.CAPE | 8.LOG | 12.NE |
| Dwelling Units | **1** | |
| Other Units | **0** | |
| Stories | **4 ONE & 1/2 STORY** | |
| 1.ONE STOR | 4.1.5 STOR | 7.1.25 STO |
| 2.TWO STOR | 5.1.75 STO | 8. |
| 3.THREE ST | 6.2.5 STOR | 9. |
| Exterior Walls | **2 VINYL/ALUMINUM** | |
| 1.WOOD | 5.STUCKO | 9.T-111 |
| 2.VIN/AL | 6.BRICK | 10.OTHER |
| 3.COMPOS. | 7.STONE | 11.LOG |
| 4.ASBESTOS | 8.CONCRETE | 12. |
| Roof Surface | **1 ASPHALT SHINGLES** | |
| 1.ASPHALT | 4.COMPOSIT | 7. |
| 2.SLATE | 5.WOOD | 8. |
| 3.METAL | 6.OTHER | 9. |
| SF Masonry Trim | **0** | |
| | **0** | |
| | **0** | |
| Year Built | **1950** | |
| Year Remodeled | **0** | |
| Foundation | **1 CONCRETE** | |
| 1.CONCRETE | 4.WOOD | 7. |
| 2.CONCRETE | 5.SLAB | 8. |
| 3.BRICK/ST | 6.PIERS | 9. |
| Basement | **4 FULL BASEMENT** | |
| 1.1/4 BASE | 4.FULL BAS | 7. |
| 2.1/2 BASE | 5.CRAWL | 8. |
| 3.3/4 BASE | 6. | 9.NO BASEM |
| Bsmt Gar # Cars | **0** | |
| Wet Basement | **2 DAMP BASEMENT** | |
| 1.DRY BASE | 4. | 7. |
| 2.DAMP BAS | 5. | 8. |
| 3.WET BASE | 6. | 9.NO BASEM |

| | | |
|---|---|---|
| SF Bsmt Living | **0** | |
| Fin Bsmt Grade | **0 0** | |
| DIRT FLOOR | **0** | |
| Heat Type | **100%** | **5 FORCED WARM AIR** |
| 1.HWBB | 5.FWA | 9.NOT HEAT |
| 2.HWCI | 6.GRAVWA | 10. |
| 3.HP | 7.ELECTRIC | 11. |
| 4.STEAM | 8.FL/WALL | 12. |
| Cool Type | **0%** | **9 NONE** |
| 1.REFRIG A | 4.W&C AIR | 7. |
| 2.EVAPORAT | 5. | 8. |
| 3.HEAT PUM | 6. | 9.NONE |
| Kitchen Style | **2 TYPICAL** | |
| 1.GOOD | 4.OBSOLETE | 7. |
| 2.TYPICAL | 5. | 8. |
| 3.OLD STYL | 6. | 9.NONE |
| Bath(s) Style | **2 TYPICAL** | |
| 1.GOOD | 4.OBSOLETE | 7. |
| 2.TYPICAL | 5. | 8. |
| 3.OLD STYL | 6. | 9.NONE |
| # Rooms | **6** | |
| # Bedrooms | **2** | |
| # Full Baths | **2** | |
| # Half Baths | **0** | |
| # Addn Fixtures | **0** | |
| # Fireplaces | **0** | |

TRIO Software
A Division of Harris Computer Systems

| | | |
|---|---|---|
| Layout | **1 TYPICAL** | |
| 1.TYPICAL | 4. | 7. |
| 2.INADEQUA | 5. | 8. |
| 3.POOR | 6. | 9. |
| Attic | **9 NONE** | |
| 1.1/4 FINI | 4.FULL FIN | 7. |
| 2.1/2 FINI | 5.FL / STA | 8. |
| 3.3/4 FINI | 6. | 9.NONE |
| Insulation | **1 FULLY INSULATED** | |
| 1.FULLY IN | 4.MINIMAL | 7. |
| 2.HEAVY | 5.UNKNOWN | 8. |
| 3.CAPPED O | 6. | 9.NONE |
| Unfinished % | **0%** | |
| Grade & Factor | **3 AVERAGE QUALITY** | |
| 1.E GRADE | 4.B GRADE | 7. |
| 2.D GRADE | 5.A GRADE | 8. |
| 3.C GRADE | 6.AA GRADE | 9.SAME |
| SQFT (Footprint) | **440** | |
| Condition | **4 AVERAGE** | |
| 1.POOR | 4.AVERAGE | 7.VERY GOO |
| 2.FAIR | 5.ABOVE AV | 8.EXCELLEN |
| 3.BELOW AV | 6.GOOD | 9.SAME |
| Phys. % Good | **0%** | |
| Funct. % Good | **100%** | |
| Functional Code | **9 None** | |
| 1.Incomp | 4.LongTerm | 7.Layout |
| 2.Overbuil | 5.Utility | 8.Other |
| 3.Delap | 6.Style | 9.None |
| Econ. % Good | **100%** | |
| Economic Code | **NONE** | |
| 0.None | 3.NO ELECT | 6. |
| 1.LOCATION | 4.GENERATC | 7. |
| 2.ENCROACH | 5. | 8.OTHER |
| Entrance Code | **5 ESTIMATED** | |
| 1.INTERIOR | 4.UNOCCUPI | 7. |
| 2.REFUSED | 5.ESTIMATE | 8. |
| 3.INFO ONL | 6. | 9. |
| Information Code | **5 ESTIMATE** | |
| 1.OWNER | 4.AGENT | 7. |
| 2.RELATIVE | 5.ESTIMATE | 8. |
| 3.TENANT | 6.OTHER | 9. |

Date Inspected 7/11/2022

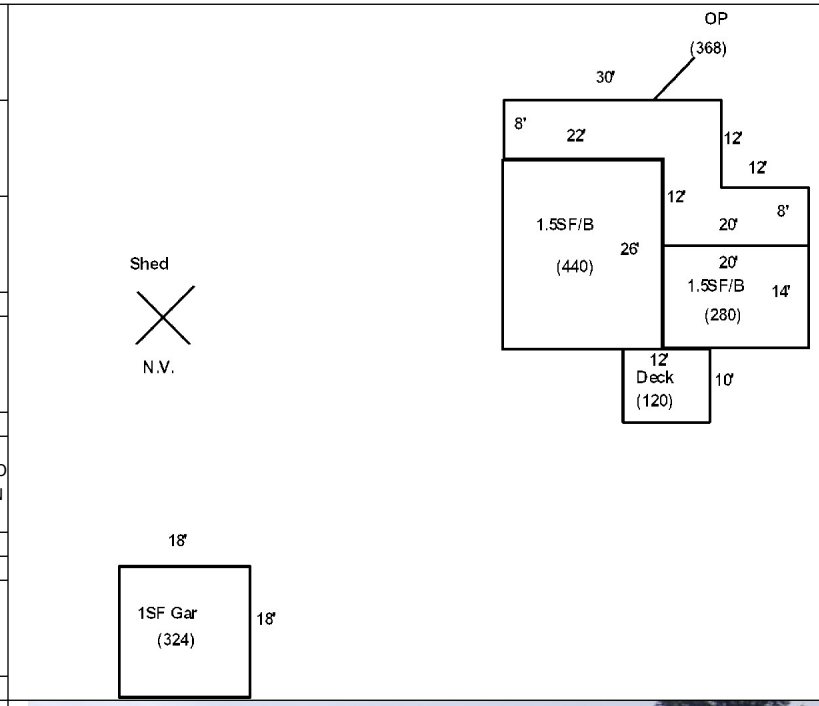

## Additions, Outbuildings & Improvements

| Type | Year | Units | Grade | Cond | Phys. | Funct. | Sound Value |
|---|---|---|---|---|---|---|---|
| 68 Deck | 1990 | 120 | 3 100 | 4 | 0 % | 100 % | |
| 14 1 & 1/2 Story w/ | 1950 | 280 | 3 100 | 4 | 0 % | 100 % | |
| 21 Open Porch | 1950 | 368 | 3 100 | 4 | 0 % | 100 % | |
| 23 Frame Garage | 1980 | 324 | 3 100 | 4 | 0 % | 100 % | |
| | | | | | % | % | |
| | | | | | % | % | |
| | | | | | % | % | |
| | | | | | % | % | |
| | | | | | % | % | |
| | | | | | % | % | |

1.One Story Fram
2.Two Story Fram
3.Three Story Fr
4.1 & 1/2 Story
5.1 & 3/4 Story
6.2 & 1/2 Story
21.Open Porch
22.Enclosed Porch
23.Frame Garage
24.Frame Shed
25.1SF Bay Window
26.1SF Over Hang
27.Unfinished Bas
28.Unfinished Att
29.Finished Basem

Map Lot 003-001A | Account 164 | Location 53 Reed Lane | Card 1 Of 1 | 8/29/2023

Reed, James
Reed, Patricia
53 Reed Lane
Wade ME 04786

B2864P83

Inspection Witnessed By:

X Date

| No./Date | Description | Date Insp. |
|---|---|---|
| | | |
| | | |
| | | |

Notes:

**Wade**

## Property Data

Neighborhood **1 Rural**

Tree Growth Year **0**

X Coordinate

Y Coordinate

Zone/Land Use **1 Residential**

Secondary Zone

Topography **2 Rolling**

| | | |
|---|---|---|
| 1.Level | 4.Below Stre | 7.Steep |
| 2.Rolling | 5.Low | 8.Rough |
| 3.Above Stre | 6.Swampy | 9. |

Utilities **1 Drilled Well / Septic**

| | | |
|---|---|---|
| 1.Well+Septi | 4.Public Wat | 7.Cess Pool |
| 2.Drilled We | 5.Public Sew | 8.Holding Ta |
| 3.Septic Sys | 6.Dug Well | 9.NoW/NoSew |

Street **3 Gravel**

| | | |
|---|---|---|
| 1.Paved | 4.Proposed | 7. |
| 2.Semi-Impro | 5.Private | 8. |
| 3.Gravel | 6. | 9.No Street |

LAND USE **0**

Building Use **0**

## Sale Data

Sale Date

Price

Sale Type

| | | |
|---|---|---|
| 1.Land | 4.Mobile | 7.C/I L&B |
| 2.L & B | 5.Other | 8. |
| 3.Building | 6.C/I Land | 9. |

Financing

| | | |
|---|---|---|
| 1.Convent | 4.Seller | 7. |
| 2.FHA/VA | 5.Private | 8. |
| 3.Assumed | 6.Cash | 9.Unknown |

Validity

| | | |
|---|---|---|
| 1.Valid | 4.Split | 7.Renovate |
| 2.Related | 5.Partial | 8.Other |
| 3.Distress | 6.Exempt | 9. |

Verified

| | | |
|---|---|---|
| 1.Buyer | 4.Agent | 7.Family |
| 2.Seller | 5.Pub Rec | 8.Other |
| 3.Lender | 6.MLS | 9. |

## Assessment Record

| Year | Land | Buildings | Exempt | Total |
|---|---|---|---|---|
| 2017 | 15,600 | 57,100 | 20,000 | 52,700 |
| 2018 | 15,600 | 57,100 | 20,000 | 52,700 |
| 2020 | 15,600 | 57,100 | 25,000 | 47,700 |
| 2021 | 16,600 | 57,100 | 25,000 | 48,700 |
| 2022 | 23,800 | 65,000 | 25,000 | 63,800 |
| 2023 | 23,800 | 65,000 | 25,000 | 63,800 |

## Land Data

| Front Foot | Type | Effective Frontage | Effective Depth | Influence Factor | Influence Code |
|---|---|---|---|---|---|
| 11.Regular Lot | | | | % | |
| 12.Delta Triangle | | | | % | |
| 13.Nabla Triangle | | | | % | |
| 14.Rear Land | | | | % | |
| 15.Class I Road | | | | % | |
| | | | | % | |
| | | | | % | |
| **Square Foot** | | **Square Feet** | | | |
| 16.Class II Road | | | | % | |
| 17.Municipal Rese | | | | % | |
| 18.Munic Sep Lago | | | | % | |
| 19.Gravel Pit | | | | % | |
| 20.Industrial Bas | | | | % | |
| | | | | % | |
| | | | | % | |
| **Fract. Acre** | | **Acreage/Sites** | | | |
| 21.Developed Pave | 23 | 1.00 | 100 | % | 0 |
| 22.Undev Paved (F | 26 | 7.80 | 100 | % | 0 |
| 23.Developed Grav | | | | % | |
| **Acres** | | | | % | |
| 24.Undev Gravel ( | | | | % | |
| 26.Rear Land | | | | % | |
| 27.Backlot | | | | % | |
| 29.Pavement | | | | % | |
| 30.Utility R O W | | | | | |
| 31.Tillable | | | | | |

**Total Acreage** 8.80

### Influence Codes

1.Vacancy
2.Unimproved
3.Topography
4.Size/Shape
5.Access
6.Restriction
7.Corner/Locatio
8.View/Environme
9.Fractional Sha
**Acres**
32.Pasture
33.Orchard
34.Softwood (FL)
35.Mixed Wood (FL
36.Hardwood (FL)
37.Softwood (TG)
38.Mixed Wood (TG
39.Hardwood (TG)
40.Wasteland
41.Open Space
42.Mobile Home Si
43.Condo Site
44.Lot Improvemen
45.Subdivision Lo
46.Heavy Ind Sit

# Wade

Map Lot 003-001A | Account 164 | Location 53 Reed Lane | Card 1 Of 1 | 8/29/2023

| | | |
|---|---|---|
| Building Style | **2 RANCH** | |
| 1.CONVENTI | 5.GARRISON | 9.GAMBREL |
| 2.RANCH | 6.SALT BOX | 10.OTHER |
| 3.RAISED R | 7.CONTEMP | 11.SPLIT |
| 4.CAPE | 8.LOG | 12.NE |
| Dwelling Units | **1** | |
| Other Units | **0** | |
| Stories | **1 ONE STORY** | |
| 1.ONE STOR | 4.1.5 STOR | 7.1.25 STO |
| 2.TWO STOR | 5.1.75 STO | 8. |
| 3.THREE ST | 6.2.5 STOR | 9. |
| Exterior Walls | **2 VINYL/ALUMINUM** | |
| 1.WOOD | 5.STUCKO | 9.T-111 |
| 2.VIN/AL | 6.BRICK | 10.OTHER |
| 3.COMPOS. | 7.STONE | 11.LOG |
| 4.ASBESTOS | 8.CONCRETE | 12. |
| Roof Surface | **1 ASPHALT SHINGLES** | |
| 1.ASPHALT | 4.COMPOSIT | 7. |
| 2.SLATE | 5.WOOD | 8. |
| 3.METAL | 6.OTHER | 9. |
| SF Masonry Trim | **0** | |
| | **0** | |
| | **0** | |
| Year Built | **1995** | |
| Year Remodeled | **0** | |
| Foundation | **1 CONCRETE** | |
| 1.CONCRETE | 4.WOOD | 7. |
| 2.CONCRETE | 5.SLAB | 8. |
| 3.BRICK/ST | 6.PIERS | 9. |
| Basement | **4 FULL BASEMENT** | |
| 1.1/4 BASE | 4.FULL BAS | 7. |
| 2.1/2 BASE | 5.CRAWL | 8. |
| 3.3/4 BASE | 6. | 9.NO BASEM |
| Bsmt Gar # Cars | **0** | |
| Wet Basement | **1 DRY BASEMENT** | |
| 1.DRY BASE | 4. | 7. |
| 2.DAMP BAS | 5. | 8. |
| 3.WET BASE | 6. | 9.NO BASEM |

| | | |
|---|---|---|
| SF Bsmt Living | **0** | |
| Fin Bsmt Grade | **0 0** | |
| DIRT FLOOR | **0** | |
| Heat Type | **100%** | **1 HOT WATER BB** |
| 1.HWBB | 5.FWA | 9.NOT HEAT |
| 2.HWCI | 6.GRAVWA | 10. |
| 3.HP | 7.ELECTRIC | 11. |
| 4.STEAM | 8.FL/WALL | 12. |
| Cool Type | **100%** | **3 HEAT PUMP** |
| 1.REFRIG A | 4.W&C AIR | 7. |
| 2.EVAPORAT | 5. | 8. |
| 3.HEAT PUM | 6. | 9.NONE |
| Kitchen Style | **2 TYPICAL** | |
| 1.GOOD | 4.OBSOLETE | 7. |
| 2.TYPICAL | 5. | 8. |
| 3.OLD STYL | 6. | 9.NONE |
| Bath(s) Style | **2 TYPICAL** | |
| 1.GOOD | 4.OBSOLETE | 7. |
| 2.TYPICAL | 5. | 8. |
| 3.OLD STYL | 6. | 9.NONE |
| # Rooms | **5** | |
| # Bedrooms | **2** | |
| # Full Baths | **1** | |
| # Half Baths | **0** | |
| # Addn Fixtures | **0** | |
| # Fireplaces | **0** | |

TRIO Software
A Division of Harris Computer Systems

| | | |
|---|---|---|
| Layout | **1 TYPICAL** | |
| 1.TYPICAL | 4. | 7. |
| 2.INADEQUA | 5. | 8. |
| 3.POOR | 6. | 9. |
| Attic | **9 NONE** | |
| 1.1/4 FINI | 4.FULL FIN | 7. |
| 2.1/2 FINI | 5.FL / STA | 8. |
| 3.3/4 FINI | 6. | 9.NONE |
| Insulation | **1 FULLY INSULATED** | |
| 1.FULLY IN | 4.MINIMAL | 7. |
| 2.HEAVY | 5.UNKNOWN | 8. |
| 3.CAPPED O | 6. | 9.NONE |
| Unfinished % | **0%** | |
| Grade & Factor | **3 AVERAGE QUALITY** | |
| 1.E GRADE | 4.B GRADE | 7. |
| 2.D GRADE | 5.A GRADE | 8. |
| 3.C GRADE | 6.AA GRADE | 9.SAME |
| SQFT (Footprint) | **1040** | |
| Condition | **4 AVERAGE** | |
| 1.POOR | 4.AVERAGE | 7.VERY GOO |
| 2.FAIR | 5.ABOVE AV | 8.EXCELLEN |
| 3.BELOW AV | 6.GOOD | 9.SAME |
| Phys. % Good | **0%** | |
| Funct. % Good | **100%** | |
| Functional Code | **9 None** | |
| 1.Incomp | 4.LongTerm | 7.Layout |
| 2.Overbuil | 5.Utility | 8.Other |
| 3.Delap | 6.Style | 9.None |
| Econ. % Good | **100%** | |
| Economic Code | **NONE** | |
| 0.None | 3.NO ELECT | 6. |
| 1.LOCATION | 4.GENERATC | 7. |
| 2.ENCROACH | 5. | 8.OTHER |
| Entrance Code | **1 INTERIOR INSPECT** | |
| 1.INTERIOR | 4.UNOCCUPI | 7. |
| 2.REFUSED | 5.ESTIMATE | 8. |
| 3.INFO ONL | 6. | 9. |
| Information Code | **1 OWNER** | |
| 1.OWNER | 4.AGENT | 7. |
| 2.RELATIVE | 5.ESTIMATE | 8. |
| 3.TENANT | 6.OTHER | 9. |

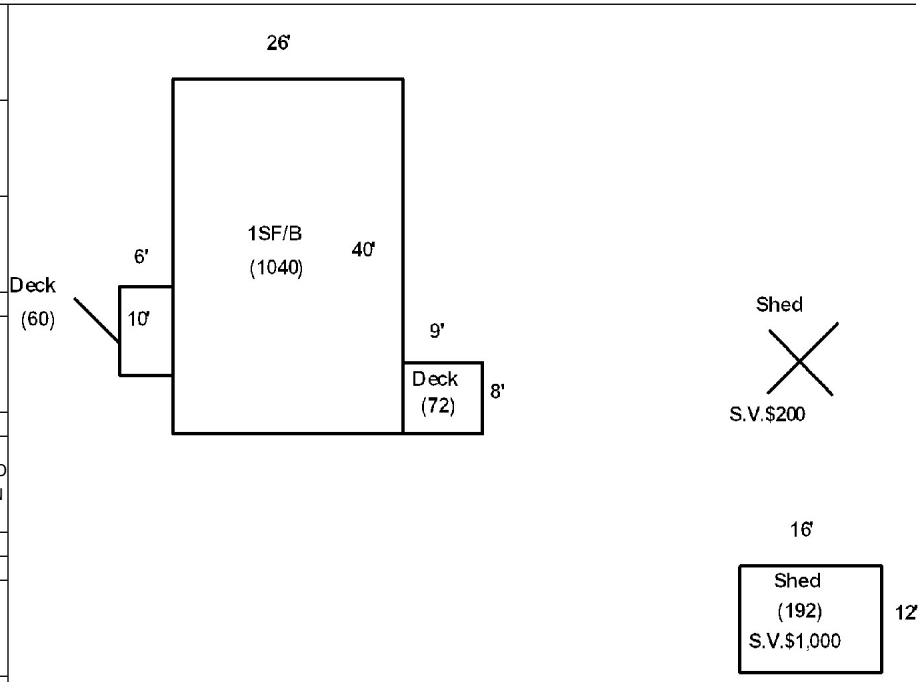


Date Inspected 8/29/2022

## Additions, Outbuildings & Improvements

| Type | Year | Units | Grade | Cond | Phys. | Funct. | Sound Value |
|---|---|---|---|---|---|---|---|
| 68 Deck | 2000 | 72 | 3 100 | 4 | 0 % | 100 % | |
| 68 Deck | 2000 | 60 | 3 100 | 4 | 0 % | 100 % | |
| 24 Frame Shed | 2000 | | | | % | % | 1,000 |
| 24 Frame Shed | 0 | | | | % | % | 200 |
| | | | | | % | % | |
| | | | | | % | % | |
| | | | | | % | % | |
| | | | | | % | % | |
| | | | | | % | % | |
| | | | | | % | % | |

1.One Story Fram
2.Two Story Fram
3.Three Story Fr
4.1 & 1/2 Story
5.1 & 3/4 Story
6.2 & 1/2 Story
21.Open Porch
22.Enclosed Porch
23.Frame Garage
24.Frame Shed
25.1SF Bay Window
26.1SF Over Hang
27.Unfinished Bas
28.Unfinished Att
29.Finished Basem

Map Lot 003-002 Account 91 Location Card 1 Of 1 8/29/2023

Porter Farms LLC
601 Griffin Ridge Road
Mapleton ME 04757

B3776P290

Previous Owner
Irving & Marr Farms
221 Davis Rd

Woodland ME 04736
Sale Date: 4/01/2016

Inspection Witnessed By:

X Date

| No./Date | Description | Date Insp. |
|---|---|---|
| | | |
| | | |
| | | |

Notes:

**Wade**

## Property Data

Neighborhood **1 Rural**

Tree Growth Year **0**

X Coordinate

Y Coordinate

Zone/Land Use **1 Residential**

Secondary Zone

Topography **2 Rolling**

1.Level 4.Below Stre 7.Steep
2.Rolling 5.Low 8.Rough
3.Above Stre 6.Swampy 9.

Utilities **9 NoWater/NoSewer**

1.Well+Septi 4.Public Wat 7.Cess Pool
2.Drilled We 5.Public Sew 8.Holding Ta
3.Septic Sys 6.Dug Well 9.NoW/NoSew

Street **1 Paved**

1.Paved 4.Proposed 7.
2.Semi-Impro 5.Private 8.
3.Gravel 6. 9.No Street

LAND USE **0**

Building Use **0**

## Sale Data

Sale Date **4/01/2016**

Price

Sale Type **1 Land Only**

1.Land 4.Mobile 7.C/I L&B
2.L & B 5.Other 8.
3.Building 6.C/I Land 9.

Financing **1 Conventional**

1.Convent 4.Seller 7.
2.FHA/VA 5.Private 8.
3.Assumed 6.Cash 9.Unknown

Validity **1 Arms Length Sale**

1.Valid 4.Split 7.Renovate
2.Related 5.Partial 8.Other
3.Distress 6.Exempt 9.

Verified **1 Buyer**

1.Buyer 4.Agent 7.Family
2.Seller 5.Pub Rec 8.Other
3.Lender 6.MLS 9.

## Assessment Record

| Year | Land | Buildings | Exempt | Total |
|---|---|---|---|---|
| 2017 | 84,400 | 0 | 0 | 84,400 |
| 2018 | 84,400 | 0 | 0 | 84,400 |
| 2020 | 84,400 | 0 | 0 | 84,400 |
| 2021 | 92,000 | 0 | 0 | 92,000 |
| 2022 | 109,100 | 0 | 0 | 109,100 |
| 2023 | 109,100 | 0 | 0 | 109,100 |

## Land Data

**Front Foot**

11.Regular Lot
12.Delta Triangle
13.Nabla Triangle
14.Rear Land
15.Class I Road

**Square Foot**

16.Class II Road
17.Municipal Rese
18.Munic Sep Lago
19.Gravel Pit
20.Industrial Bas

**Fract. Acre**

21.Developed Pave
22.Undev Paved (F
23.Developed Grav
**Acres**
24.Undev Gravel (
26.Rear Land
27.Backlot
29.Pavement
30.Utility R O W
31.Tillable

| Type | Effective Frontage | Effective Depth | Influence Factor | Influence Code |
|---|---|---|---|---|
| | | | % | |
| | | | % | |
| | | | % | |
| | | | % | |
| | | | % | |
| | | | % | |
| | | | % | |
| **Square Feet** | | | | |
| | | | % | |
| | | | % | |
| | | | % | |
| | | | % | |
| | | | % | |
| | | | % | |
| | | | % | |
| **Acreage/Sites** | | | | |
| 22 | 1.00 | 100 | % | 0 |
| 26 | 68.00 | 100 | % | 0 |
| 31 | 57.00 | 100 | % | 0 |
| 32 | 7.00 | 100 | % | 0 |
| 40 | 10.00 | 100 | % | 0 |
| | | | % | |
| | | | % | |

**Total Acreage** 143.00

**Influence Codes**

1.Vacancy
2.Unimproved
3.Topography
4.Size/Shape
5.Access
6.Restriction
7.Corner/Locatio
8.View/Environme
9.Fractional Sha
**Acres**
32.Pasture
33.Orchard
34.Softwood (FL)
35.Mixed Wood (FL
36.Hardwood (FL)
37.Softwood (TG)
38.Mixed Wood (TG
39.Hardwood (TG)
40.Wasteland
41.Open Space
42.Mobile Home Si
43.Condo Site
44.Lot Improvemen
45.Subdivision Lo
46.Heavy Ind Sit

# Wade

Map Lot 003-002 | Account 91 | Location | Card 1 Of 1 | 8/29/2023

| | | |
|---|---|---|
| Building Style **0** | | |
| 1.CONVENTI | 5.GARRISON | 9.GAMBREL |
| 2.RANCH | 6.SALT BOX | 10.OTHER |
| 3.RAISED R | 7.CONTEMP | 11.SPLIT |
| 4.CAPE | 8.LOG | 12.NE |
| Dwelling Units **0** | | |
| Other Units **0** | | |
| Stories **0** | | |
| 1.ONE STOR | 4.1.5 STOR | 7.1.25 STO |
| 2.TWO STOR | 5.1.75 STO | 8. |
| 3.THREE ST | 6.2.5 STOR | 9. |
| Exterior Walls **0** | | |
| 1.WOOD | 5.STUCKO | 9.T-111 |
| 2.VIN/AL | 6.BRICK | 10.OTHER |
| 3.COMPOS. | 7.STONE | 11.LOG |
| 4.ASBESTOS | 8.CONCRETE | 12. |
| Roof Surface **0** | | |
| 1.ASPHALT | 4.COMPOSIT | 7. |
| 2.SLATE | 5.WOOD | 8. |
| 3.METAL | 6.OTHER | 9. |
| SF Masonry Trim **0** | | |
| **0** | | |
| **0** | | |
| Year Built **0** | | |
| Year Remodeled **0** | | |
| Foundation **0** | | |
| 1.CONCRETE | 4.WOOD | 7. |
| 2.CONCRETE | 5.SLAB | 8. |
| 3.BRICK/ST | 6.PIERS | 9. |
| Basement **0** | | |
| 1.1/4 BASE | 4.FULL BAS | 7. |
| 2.1/2 BASE | 5.CRAWL | 8. |
| 3.3/4 BASE | 6. | 9.NO BASEM |
| Bsmt Gar # Cars **0** | | |
| Wet Basement **0** | | |
| 1.DRY BASE | 4. | 7. |
| 2.DAMP BAS | 5. | 8. |
| 3.WET BASE | 6. | 9.NO BASEM |

| | | |
|---|---|---|
| SF Bsmt Living **0** | | |
| Fin Bsmt Grade **0 0** | | |
| DIRT FLOOR **0** | | |
| Heat Type **100%** **0** | | |
| 1.HWBB | 5.FWA | 9.NOT HEAT |
| 2.HWCI | 6.GRAVWA | 10. |
| 3.HP | 7.ELECTRIC | 11. |
| 4.STEAM | 8.FL/WALL | 12. |
| Cool Type **0%** **9 NONE** | | |
| 1.REFRIG A | 4.W&C AIR | 7. |
| 2.EVAPORAT | 5. | 8. |
| 3.HEAT PUM | 6. | 9.NONE |
| Kitchen Style **0** | | |
| 1.GOOD | 4.OBSOLETE | 7. |
| 2.TYPICAL | 5. | 8. |
| 3.OLD STYL | 6. | 9.NONE |
| Bath(s) Style **0** | | |
| 1.GOOD | 4.OBSOLETE | 7. |
| 2.TYPICAL | 5. | 8. |
| 3.OLD STYL | 6. | 9.NONE |
| # Rooms **0** | | |
| # Bedrooms **0** | | |
| # Full Baths **0** | | |
| # Half Baths **0** | | |
| # Addn Fixtures **0** | | |
| # Fireplaces **0** | | |

TRIO Software
A Division of Harris Computer Systems

| | | |
|---|---|---|
| Layout **0** | | |
| 1.TYPICAL | 4. | 7. |
| 2.INADEQUA | 5. | 8. |
| 3.POOR | 6. | 9. |
| Attic **0** | | |
| 1.1/4 FINI | 4.FULL FIN | 7. |
| 2.1/2 FINI | 5.FL / STA | 8. |
| 3.3/4 FINI | 6. | 9.NONE |
| Insulation **0** | | |
| 1.FULLY IN | 4.MINIMAL | 7. |
| 2.HEAVY | 5.UNKNOWN | 8. |
| 3.CAPPED O | 6. | 9.NONE |
| Unfinished % **0%** | | |
| Grade & Factor **0 0%** | | |
| 1.E GRADE | 4.B GRADE | 7. |
| 2.D GRADE | 5.A GRADE | 8. |
| 3.C GRADE | 6.AA GRADE | 9.SAME |
| SQFT (Footprint) **0** | | |
| Condition **0** | | |
| 1.POOR | 4.AVERAGE | 7.VERY GOO |
| 2.FAIR | 5.ABOVE AV | 8.EXCELLEN |
| 3.BELOW AV | 6.GOOD | 9.SAME |
| Phys. % Good **0%** | | |
| Funct. % Good **100%** | | |
| Functional Code **9 None** | | |
| 1.Incomp | 4.LongTerm | 7.Layout |
| 2.Overbuil | 5.Utility | 8.Other |
| 3.Delap | 6.Style | 9.None |
| Econ. % Good **100%** | | |
| Economic Code **NONE** | | |
| 0.None | 3.NO ELECT | 6. |
| 1.LOCATION | 4.GENERATC | 7. |
| 2.ENCROACH | 5. | 8.OTHER |
| Entrance Code **5 ESTIMATED** | | |
| 1.INTERIOR | 4.UNOCCUPI | 7. |
| 2.REFUSED | 5.ESTIMATE | 8. |
| 3.INFO ONL | 6. | 9. |
| Information Code **5 ESTIMATE** | | |
| 1.OWNER | 4.AGENT | 7. |
| 2.RELATIVE | 5.ESTIMATE | 8. |
| 3.TENANT | 6.OTHER | 9. |

Date Inspected 7/14/2022

## Additions, Outbuildings & Improvements

| Type | Year | Units | Grade | Cond | Phys. | Funct. | Sound Value |
|---|---|---|---|---|---|---|---|
| | | | | | % | % | |
| | | | | | % | % | |
| | | | | | % | % | |
| | | | | | % | % | |
| | | | | | % | % | |
| | | | | | % | % | |
| | | | | | % | % | |
| | | | | | % | % | |
| | | | | | % | % | |
| | | | | | % | % | |

1.One Story Fram
2.Two Story Fram
3.Three Story Fr
4.1 & 1/2 Story
5.1 & 3/4 Story
6.2 & 1/2 Story
21.Open Porch
22.Enclosed Porch
23.Frame Garage
24.Frame Shed
25.1SF Bay Window
26.1SF Over Hang
27.Unfinished Bas
28.Unfinished Att
29.Finished Basem

Map Lot 003-002-1 & 005-2 Account 109 Location 287 South Wade Rd Card 1 Of 1 8/29/2023

Klei, Jr., Herbert E.
76 Turnpike Road
Willington CT 06279

B3077P333

## Property Data

Neighborhood **1 Rural**

Tree Growth Year **0**

X Coordinate

Y Coordinate

Zone/Land Use **1 Residential**

Secondary Zone

Topography **2 Rolling**

| | | |
|---|---|---|
| 1.Level | 4.Below Stre | 7.Steep |
| 2.Rolling | 5.Low | 8.Rough |
| 3.Above Stre | 6.Swampy | 9. |

Utilities

| | | |
|---|---|---|
| 1.Well+Septi | 4.Public Wat | 7.Cess Pool |
| 2.Drilled We | 5.Public Sew | 8.Holding Ta |
| 3.Septic Sys | 6.Dug Well | 9.NoW/NoSew |

Street **3 Gravel**

| | | |
|---|---|---|
| 1.Paved | 4.Proposed | 7. |
| 2.Semi-Impro | 5.Private | 8. |
| 3.Gravel | 6. | 9.No Street |

LAND USE **0**

Building Use **0**

## Sale Data

Sale Date

Price

Sale Type

| | | |
|---|---|---|
| 1.Land | 4.Mobile | 7.C/I L&B |
| 2.L & B | 5.Other | 8. |
| 3.Building | 6.C/I Land | 9. |

Financing

| | | |
|---|---|---|
| 1.Convent | 4.Seller | 7. |
| 2.FHA/VA | 5.Private | 8. |
| 3.Assumed | 6.Cash | 9.Unknown |

Validity

| | | |
|---|---|---|
| 1.Valid | 4.Split | 7.Renovate |
| 2.Related | 5.Partial | 8.Other |
| 3.Distress | 6.Exempt | 9. |

Verified

| | | |
|---|---|---|
| 1.Buyer | 4.Agent | 7.Family |
| 2.Seller | 5.Pub Rec | 8.Other |
| 3.Lender | 6.MLS | 9. |

## Assessment Record

| Year | Land | Buildings | Exempt | Total |
|---|---|---|---|---|
| 2017 | 24,300 | 0 | 0 | 24,300 |
| 2018 | 24,200 | 0 | 0 | 24,200 |
| 2020 | 20,700 | 0 | 0 | 20,700 |
| 2021 | 21,300 | 0 | 0 | 21,300 |
| 2022 | 22,800 | 0 | 0 | 22,800 |
| 2023 | 23,000 | 0 | 0 | 23,000 |

## Land Data

| Front Foot | Type | Effective Frontage | Effective Depth | Influence Factor | Influence Code |
|---|---|---|---|---|---|
| 11.Regular Lot | | | | % | |
| 12.Delta Triangle | | | | % | |
| 13.Nabla Triangle | | | | % | |
| 14.Rear Land | | | | % | |
| 15.Class I Road | | | | % | |
| | | | | % | |
| | | | | % | |
| **Square Foot** | | **Square Feet** | | | |
| 16.Class II Road | | | | % | |
| 17.Municipal Rese | | | | % | |
| 18.Munic Sep Lago | | | | % | |
| 19.Gravel Pit | | | | % | |
| 20.Industrial Bas | | | | % | |
| | | | | % | |
| | | | | % | |
| **Fract. Acre** | | **Acreage/Sites** | | | |
| 21.Developed Pave | 22 | 1.00 | 100 | % | 0 |
| 22.Undev Paved (F | 26 | 14.00 | 100 | % | 0 |
| 23.Developed Grav | 39 | 12.00 | 100 | % | 0 |
| **Acres** | 40 | 40.00 | 100 | % | 0 |
| 24.Undev Gravel ( | | | | % | |
| 26.Rear Land | | | | % | |
| 27.Backlot | | | | % | |
| 29.Pavement | | | | | |
| 30.Utility R O W | | | | | |
| 31.Tillable | | | | | |

**Total Acreage** 67.00

### Influence Codes

1.Vacancy
2.Unimproved
3.Topography
4.Size/Shape
5.Access
6.Restriction
7.Corner/Locatio
8.View/Environme
9.Fractional Sha
**Acres**
32.Pasture
33.Orchard
34.Softwood (FL)
35.Mixed Wood (FL
36.Hardwood (FL)
37.Softwood (TG)
38.Mixed Wood (TG
39.Hardwood (TG)
40.Wasteland
41.Open Space
42.Mobile Home Si
43.Condo Site
44.Lot Improvemen
45.Subdivision Lo
46.Heavy Ind Sit

Inspection Witnessed By:

X Date

| No./Date | Description | Date Insp. |
|---|---|---|
| | | |
| | | |
| | | |

Notes:

**Wade**

# Wade

Map Lot 003-002-1 & 005-2 | Account 109 | Location 287 South Wade Rd | Card 1 Of 1 | 8/29/2023

| | | |
|---|---|---|
| Building Style **0** | | |
| 1.CONVENTI | 5.GARRISON | 9.GAMBREL |
| 2.RANCH | 6.SALT BOX | 10.OTHER |
| 3.RAISED R | 7.CONTEMP | 11.SPLIT |
| 4.CAPE | 8.LOG | 12.NE |
| Dwelling Units **0** | | |
| Other Units **0** | | |
| Stories **0** | | |
| 1.ONE STOR | 4.1.5 STOR | 7.1.25 STO |
| 2.TWO STOR | 5.1.75 STO | 8. |
| 3.THREE ST | 6.2.5 STOR | 9. |
| Exterior Walls **0** | | |
| 1.WOOD | 5.STUCKO | 9.T-111 |
| 2.VIN/AL | 6.BRICK | 10.OTHER |
| 3.COMPOS. | 7.STONE | 11.LOG |
| 4.ASBESTOS | 8.CONCRETE | 12. |
| Roof Surface **0** | | |
| 1.ASPHALT | 4.COMPOSIT | 7. |
| 2.SLATE | 5.WOOD | 8. |
| 3.METAL | 6.OTHER | 9. |
| SF Masonry Trim **0** | | |
| **0** | | |
| **0** | | |
| Year Built **0** | | |
| Year Remodeled **0** | | |
| Foundation **0** | | |
| 1.CONCRETE | 4.WOOD | 7. |
| 2.CONCRETE | 5.SLAB | 8. |
| 3.BRICK/ST | 6.PIERS | 9. |
| Basement **0** | | |
| 1.1/4 BASE | 4.FULL BAS | 7. |
| 2.1/2 BASE | 5.CRAWL | 8. |
| 3.3/4 BASE | 6. | 9.NO BASEM |
| Bsmt Gar # Cars **0** | | |
| Wet Basement **0** | | |
| 1.DRY BASE | 4. | 7. |
| 2.DAMP BAS | 5. | 8. |
| 3.WET BASE | 6. | 9.NO BASEM |

| | | |
|---|---|---|
| SF Bsmt Living **0** | | |
| Fin Bsmt Grade **0 0** | | |
| DIRT FLOOR **0** | | |
| Heat Type **100%** **0** | | |
| 1.HWBB | 5.FWA | 9.NOT HEAT |
| 2.HWCI | 6.GRAVWA | 10. |
| 3.HP | 7.ELECTRIC | 11. |
| 4.STEAM | 8.FL/WALL | 12. |
| Cool Type **0%** **9 NONE** | | |
| 1.REFRIG A | 4.W&C AIR | 7. |
| 2.EVAPORAT | 5. | 8. |
| 3.HEAT PUM | 6. | 9.NONE |
| Kitchen Style **0** | | |
| 1.GOOD | 4.OBSOLETE | 7. |
| 2.TYPICAL | 5. | 8. |
| 3.OLD STYL | 6. | 9.NONE |
| Bath(s) Style **0** | | |
| 1.GOOD | 4.OBSOLETE | 7. |
| 2.TYPICAL | 5. | 8. |
| 3.OLD STYL | 6. | 9.NONE |
| # Rooms **0** | | |
| # Bedrooms **0** | | |
| # Full Baths **0** | | |
| # Half Baths **0** | | |
| # Addn Fixtures **0** | | |
| # Fireplaces **0** | | |

TRIO Software
A Division of Harris Computer Systems

| | | |
|---|---|---|
| Layout **0** | | |
| 1.TYPICAL | 4. | 7. |
| 2.INADEQUA | 5. | 8. |
| 3.POOR | 6. | 9. |
| Attic **0** | | |
| 1.1/4 FINI | 4.FULL FIN | 7. |
| 2.1/2 FINI | 5.FL / STA | 8. |
| 3.3/4 FINI | 6. | 9.NONE |
| Insulation **0** | | |
| 1.FULLY IN | 4.MINIMAL | 7. |
| 2.HEAVY | 5.UNKNOWN | 8. |
| 3.CAPPED O | 6. | 9.NONE |
| Unfinished % **0%** | | |
| Grade & Factor **0 0%** | | |
| 1.E GRADE | 4.B GRADE | 7. |
| 2.D GRADE | 5.A GRADE | 8. |
| 3.C GRADE | 6.AA GRADE | 9.SAME |
| SQFT (Footprint) **0** | | |
| Condition **0** | | |
| 1.POOR | 4.AVERAGE | 7.VERY GOO |
| 2.FAIR | 5.ABOVE AV | 8.EXCELLEN |
| 3.BELOW AV | 6.GOOD | 9.SAME |
| Phys. % Good **0%** | | |
| Funct. % Good **100%** | | |
| Functional Code **9 None** | | |
| 1.Incomp | 4.LongTerm | 7.Layout |
| 2.Overbuil | 5.Utility | 8.Other |
| 3.Delap | 6.Style | 9.None |
| Econ. % Good **100%** | | |
| Economic Code **NONE** | | |
| 0.None | 3.NO ELECT | 6. |
| 1.LOCATION | 4.GENERATC | 7. |
| 2.ENCROACH | 5. | 8.OTHER |
| Entrance Code **0** | | |
| 1.INTERIOR | 4.UNOCCUPI | 7. |
| 2.REFUSED | 5.ESTIMATE | 8. |
| 3.INFO ONL | 6. | 9. |
| Information Code **0** | | |
| 1.OWNER | 4.AGENT | 7. |
| 2.RELATIVE | 5.ESTIMATE | 8. |
| 3.TENANT | 6.OTHER | 9. |

Date Inspected

## Additions, Outbuildings & Improvements

| Type | Year | Units | Grade | Cond | Phys. | Funct. | Sound Value |
|---|---|---|---|---|---|---|---|
| | | | | | % | % | |
| | | | | | % | % | |
| | | | | | % | % | |
| | | | | | % | % | |
| | | | | | % | % | |
| | | | | | % | % | |
| | | | | | % | % | |
| | | | | | % | % | |
| | | | | | % | % | |
| | | | | | % | % | |

1.One Story Fram
2.Two Story Fram
3.Three Story Fr
4.1 & 1/2 Story
5.1 & 3/4 Story
6.2 & 1/2 Story
21.Open Porch
22.Enclosed Porch
23.Frame Garage
24.Frame Shed
25.1SF Bay Window
26.1SF Over Hang
27.Unfinished Bas
28.Unfinished Att
29.Finished Basem

Map Lot 003-003 & 004-2 Account 110 Location 228 South Wade Rd Card 1 Of 1 8/29/2023

KLEI, HERBERT E
76 Turnpike Rd
Willington CT 06279

B3077P333

## Property Data

Neighborhood **1 Rural**

Tree Growth Year **0**

X Coordinate

Y Coordinate

Zone/Land Use **1 Residential**

Secondary Zone

Topography **2 Rolling**

| | | |
|---|---|---|
| 1.Level | 4.Below Stre | 7.Steep |
| 2.Rolling | 5.Low | 8.Rough |
| 3.Above Stre | 6.Swampy | 9. |

Utilities **9 NoWater/NoSewer**

| | | |
|---|---|---|
| 1.Well+Septi | 4.Public Wat | 7.Cess Pool |
| 2.Drilled We | 5.Public Sew | 8.Holding Ta |
| 3.Septic Sys | 6.Dug Well | 9.NoW/NoSew |

Street **1 Paved**

| | | |
|---|---|---|
| 1.Paved | 4.Proposed | 7. |
| 2.Semi-Impro | 5.Private | 8. |
| 3.Gravel | 6. | 9.No Street |

LAND USE **0**

Building Use **0**

## Sale Data

Sale Date

Price

Sale Type

| | | |
|---|---|---|
| 1.Land | 4.Mobile | 7.C/I L&B |
| 2.L & B | 5.Other | 8. |
| 3.Building | 6.C/I Land | 9. |

Financing

| | | |
|---|---|---|
| 1.Convent | 4.Seller | 7. |
| 2.FHA/VA | 5.Private | 8. |
| 3.Assumed | 6.Cash | 9.Unknown |

Validity

| | | |
|---|---|---|
| 1.Valid | 4.Split | 7.Renovate |
| 2.Related | 5.Partial | 8.Other |
| 3.Distress | 6.Exempt | 9. |

Verified

| | | |
|---|---|---|
| 1.Buyer | 4.Agent | 7.Family |
| 2.Seller | 5.Pub Rec | 8.Other |
| 3.Lender | 6.MLS | 9. |

## Assessment Record

| Year | Land | Buildings | Exempt | Total |
|---|---|---|---|---|
| 2017 | 42,400 | 24,200 | 0 | 66,600 |
| 2018 | 42,000 | 11,100 | 0 | 53,100 |
| 2020 | 40,700 | 3,760 | 0 | 44,460 |
| 2021 | 39,800 | 3,800 | 0 | 43,600 |
| 2022 | 49,700 | 3,000 | 0 | 52,700 |
| 2023 | 50,300 | 3,000 | 0 | 53,300 |

## Land Data

| Front Foot | Type | Effective Frontage | Effective Depth | Influence Factor | Influence Code |
|---|---|---|---|---|---|
| 11.Regular Lot | | | | % | |
| 12.Delta Triangle | | | | % | |
| 13.Nabla Triangle | | | | % | |
| 14.Rear Land | | | | % | |
| 15.Class I Road | | | | % | |
| | | | | % | |
| | | | | % | |
| **Square Foot** | | **Square Feet** | | | |
| 16.Class II Road | | | | % | |
| 17.Municipal Rese | | | | % | |
| 18.Munic Sep Lago | | | | % | |
| 19.Gravel Pit | | | | % | |
| 20.Industrial Bas | | | | % | |
| | | | | % | |
| | | | | % | |
| **Fract. Acre** | | **Acreage/Sites** | | | |
| 21.Developed Pave | 21 | 1.00 | 100 | % | 0 |
| 22.Undev Paved (F | 26 | 24.00 | 100 | % | 0 |
| 23.Developed Grav | 37 | 26.00 | 100 | % | 0 |
| **Acres** | 38 | 69.00 | 100 | % | 0 |
| 24.Undev Gravel ( | 39 | 17.00 | 100 | % | 0 |
| 26.Rear Land | | | | % | |
| 27.Backlot | | | | % | |
| 29.Pavement | | | | | |
| 30.Utility R O W | | | | | |
| 31.Tillable | | | | | |

**Total Acreage** 137.00

### Influence Codes

1.Vacancy
2.Unimproved
3.Topography
4.Size/Shape
5.Access
6.Restriction
7.Corner/Locatio
8.View/Environme
9.Fractional Sha
**Acres**
32.Pasture
33.Orchard
34.Softwood (FL)
35.Mixed Wood (FL
36.Hardwood (FL)
37.Softwood (TG)
38.Mixed Wood (TG
39.Hardwood (TG)
40.Wasteland
41.Open Space
42.Mobile Home Si
43.Condo Site
44.Lot Improvemen
45.Subdivision Lo
46.Heavy Ind Sit

Inspection Witnessed By:

X Date

| No./Date | Description | Date Insp. |
|---|---|---|
| | | |
| | | |
| | | |

Notes:

**Wade**

# Wade

Map Lot 003-003 & 004-2 | Account 110 | Location 228 South Wade Rd | Card 1 Of 1 | 8/29/2023

| | | |
|---|---|---|
| Building Style **0** | | |
| 1.CONVENTI | 5.GARRISON | 9.GAMBREL |
| 2.RANCH | 6.SALT BOX | 10.OTHER |
| 3.RAISED R | 7.CONTEMP | 11.SPLIT |
| 4.CAPE | 8.LOG | 12.NE |
| Dwelling Units **0** | | |
| Other Units **0** | | |
| Stories **0** | | |
| 1.ONE STOR | 4.1.5 STOR | 7.1.25 STO |
| 2.TWO STOR | 5.1.75 STO | 8. |
| 3.THREE ST | 6.2.5 STOR | 9. |
| Exterior Walls **0** | | |
| 1.WOOD | 5.STUCKO | 9.T-111 |
| 2.VIN/AL | 6.BRICK | 10.OTHER |
| 3.COMPOS. | 7.STONE | 11.LOG |
| 4.ASBESTOS | 8.CONCRETE | 12. |
| Roof Surface **0** | | |
| 1.ASPHALT | 4.COMPOSIT | 7. |
| 2.SLATE | 5.WOOD | 8. |
| 3.METAL | 6.OTHER | 9. |
| SF Masonry Trim **0** | | |
| **0** | | |
| **0** | | |
| Year Built **0** | | |
| Year Remodeled **0** | | |
| Foundation **0** | | |
| 1.CONCRETE | 4.WOOD | 7. |
| 2.CONCRETE | 5.SLAB | 8. |
| 3.BRICK/ST | 6.PIERS | 9. |
| Basement **0** | | |
| 1.1/4 BASE | 4.FULL BAS | 7. |
| 2.1/2 BASE | 5.CRAWL | 8. |
| 3.3/4 BASE | 6. | 9.NO BASEM |
| Bsmt Gar # Cars **0** | | |
| Wet Basement **0** | | |
| 1.DRY BASE | 4. | 7. |
| 2.DAMP BAS | 5. | 8. |
| 3.WET BASE | 6. | 9.NO BASEM |

| | | |
|---|---|---|
| SF Bsmt Living **0** | | |
| Fin Bsmt Grade **0 0** | | |
| DIRT FLOOR **0** | | |
| Heat Type **100%** **0** | | |
| 1.HWBB | 5.FWA | 9.NOT HEAT |
| 2.HWCI | 6.GRAVWA | 10. |
| 3.HP | 7.ELECTRIC | 11. |
| 4.STEAM | 8.FL/WALL | 12. |
| Cool Type **0%** **9 NONE** | | |
| 1.REFRIG A | 4.W&C AIR | 7. |
| 2.EVAPORAT | 5. | 8. |
| 3.HEAT PUM | 6. | 9.NONE |
| Kitchen Style **0** | | |
| 1.GOOD | 4.OBSOLETE | 7. |
| 2.TYPICAL | 5. | 8. |
| 3.OLD STYL | 6. | 9.NONE |
| Bath(s) Style **0** | | |
| 1.GOOD | 4.OBSOLETE | 7. |
| 2.TYPICAL | 5. | 8. |
| 3.OLD STYL | 6. | 9.NONE |
| # Rooms **0** | | |
| # Bedrooms **0** | | |
| # Full Baths **0** | | |
| # Half Baths **0** | | |
| # Addn Fixtures **0** | | |
| # Fireplaces **0** | | |

TRIO Software
A Division of Harris Computer Systems

| | | |
|---|---|---|
| Layout **0** | | |
| 1.TYPICAL | 4. | 7. |
| 2.INADEQUA | 5. | 8. |
| 3.POOR | 6. | 9. |
| Attic **0** | | |
| 1.1/4 FINI | 4.FULL FIN | 7. |
| 2.1/2 FINI | 5.FL / STA | 8. |
| 3.3/4 FINI | 6. | 9.NONE |
| Insulation **0** | | |
| 1.FULLY IN | 4.MINIMAL | 7. |
| 2.HEAVY | 5.UNKNOWN | 8. |
| 3.CAPPED O | 6. | 9.NONE |
| Unfinished % **0%** | | |
| Grade & Factor **0 0%** | | |
| 1.E GRADE | 4.B GRADE | 7. |
| 2.D GRADE | 5.A GRADE | 8. |
| 3.C GRADE | 6.AA GRADE | 9.SAME |
| SQFT (Footprint) **0** | | |
| Condition **0** | | |
| 1.POOR | 4.AVERAGE | 7.VERY GOO |
| 2.FAIR | 5.ABOVE AV | 8.EXCELLEN |
| 3.BELOW AV | 6.GOOD | 9.SAME |
| Phys. % Good **0%** | | |
| Funct. % Good **100%** | | |
| Functional Code **9 None** | | |
| 1.Incomp | 4.LongTerm | 7.Layout |
| 2.Overbuil | 5.Utility | 8.Other |
| 3.Delap | 6.Style | 9.None |
| Econ. % Good **100%** | | |
| Economic Code **NONE** | | |
| 0.None | 3.NO ELECT | 6. |
| 1.LOCATION | 4.GENERATC | 7. |
| 2.ENCROACH | 5. | 8.OTHER |
| Entrance Code **3 INFORMATION ONLY** | | |
| 1.INTERIOR | 4.UNOCCUPI | 7. |
| 2.REFUSED | 5.ESTIMATE | 8. |
| 3.INFO ONL | 6. | 9. |
| Information Code **4 AGENT** | | |
| 1.OWNER | 4.AGENT | 7. |
| 2.RELATIVE | 5.ESTIMATE | 8. |
| 3.TENANT | 6.OTHER | 9. |

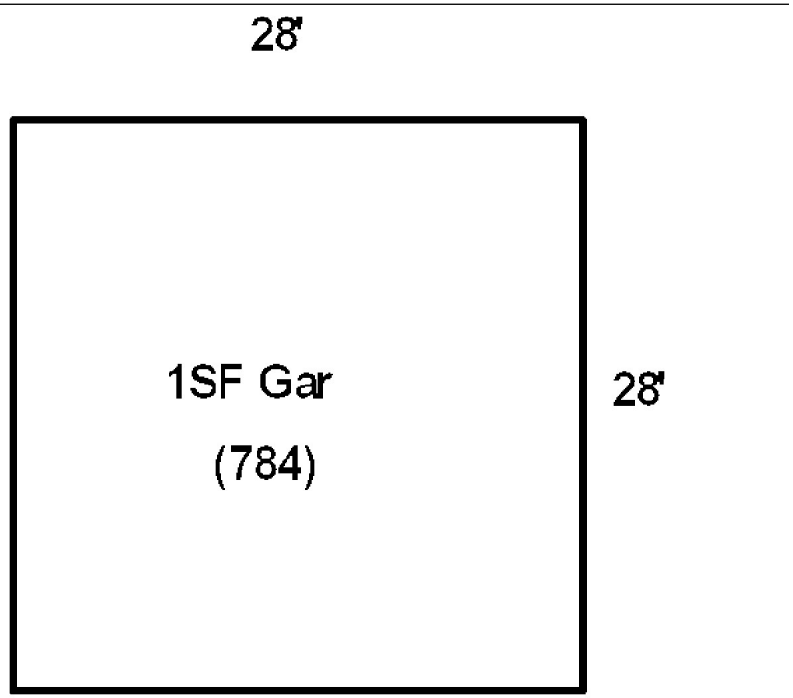

Date Inspected 7/11/2022

## Additions, Outbuildings & Improvements

| Type | Year | Units | Grade | Cond | Phys. | Funct. | Sound Value |
|---|---|---|---|---|---|---|---|
| 231 ..... | 970 | | | | % | % | 3,000 |
| | | | | | % | % | |
| | | | | | % | % | |
| | | | | | % | % | |
| | | | | | % | % | |
| | | | | | % | % | |
| | | | | | % | % | |
| | | | | | % | % | |
| | | | | | % | % | |
| | | | | | % | % | |

1.One Story Fram
2.Two Story Fram
3.Three Story Fr
4.1 & 1/2 Story
5.1 & 3/4 Story
6.2 & 1/2 Story
21.Open Porch
22.Enclosed Porch
23.Frame Garage
24.Frame Shed
25.1SF Bay Window
26.1SF Over Hang
27.Unfinished Bas
28.Unfinished Att
29.Finished Basem

Map Lot 003-004-1 Account 118 Location South Wade Rd Card 1 Of 1 8/29/2023

Hallowell, Larry
Hallowell, Wanita
131 Timoga Trail
St. Augustine FL 32084

B4049P48

## Property Data

Neighborhood **1 Rural**

Tree Growth Year **0**

X Coordinate

Y Coordinate

Zone/Land Use **1 Residential**

Secondary Zone

Topography **2 Rolling**

| | | |
|---|---|---|
| 1.Level | 4.Below Stre | 7.Steep |
| 2.Rolling | 5.Low | 8.Rough |
| 3.Above Stre | 6.Swampy | 9. |

Utilities **9 NoWater/NoSewer**

| | | |
|---|---|---|
| 1.Well+Septi | 4.Public Wat | 7.Cess Pool |
| 2.Drilled We | 5.Public Sew | 8.Holding Ta |
| 3.Septic Sys | 6.Dug Well | 9.NoW/NoSew |

Street **1 Paved**

| | | |
|---|---|---|
| 1.Paved | 4.Proposed | 7. |
| 2.Semi-Impro | 5.Private | 8. |
| 3.Gravel | 6. | 9.No Street |

LAND USE **0**

Building Use **0**

## Sale Data

Sale Date

Price

Sale Type

| | | |
|---|---|---|
| 1.Land | 4.Mobile | 7.C/I L&B |
| 2.L & B | 5.Other | 8. |
| 3.Building | 6.C/I Land | 9. |

Financing

| | | |
|---|---|---|
| 1.Convent | 4.Seller | 7. |
| 2.FHA/VA | 5.Private | 8. |
| 3.Assumed | 6.Cash | 9.Unknown |

Validity

| | | |
|---|---|---|
| 1.Valid | 4.Split | 7.Renovate |
| 2.Related | 5.Partial | 8.Other |
| 3.Distress | 6.Exempt | 9. |

Verified

| | | |
|---|---|---|
| 1.Buyer | 4.Agent | 7.Family |
| 2.Seller | 5.Pub Rec | 8.Other |
| 3.Lender | 6.MLS | 9. |

## Assessment Record

| Year | Land | Buildings | Exempt | Total |
|---|---|---|---|---|
| 2017 | 10,900 | 0 | 0 | 10,900 |
| 2018 | 10,900 | 0 | 0 | 10,900 |
| 2020 | 10,900 | 0 | 0 | 10,900 |
| 2021 | 11,400 | 0 | 0 | 11,400 |
| 2022 | 16,500 | 0 | 0 | 16,500 |
| 2023 | 16,500 | 0 | 0 | 16,500 |

## Land Data

| Front Foot | Type | Effective Frontage | Effective Depth | Influence Factor | Influence Code |
|---|---|---|---|---|---|
| 11.Regular Lot | | | | % | |
| 12.Delta Triangle | | | | % | |
| 13.Nabla Triangle | | | | % | |
| 14.Rear Land | | | | % | |
| 15.Class I Road | | | | % | |
| | | | | % | |
| | | | | % | |
| **Square Foot** | | **Square Feet** | | | |
| 16.Class II Road | | | | % | |
| 17.Municipal Rese | | | | % | |
| 18.Munic Sep Lago | | | | % | |
| 19.Gravel Pit | | | | % | |
| 20.Industrial Bas | | | | % | |
| | | | | % | |
| | | | | % | |
| **Fract. Acre** | | **Acreage/Sites** | | | |
| 21.Developed Pave | 22 | 1.00 | 100 | % | 0 |
| 22.Undev Paved (F | 26 | 8.00 | 100 | % | 0 |
| 23.Developed Grav | 32 | 3.00 | 100 | % | 0 |
| **Acres** | | | | % | |
| 24.Undev Gravel ( | | | | % | |
| 26.Rear Land | | | | % | |
| 27.Backlot | | | | % | |
| 29.Pavement | | | | % | |
| 30.Utility R O W | | | | | |
| 31.Tillable | | | | | |

**Total Acreage** 12.00

### Influence Codes

1.Vacancy
2.Unimproved
3.Topography
4.Size/Shape
5.Access
6.Restriction
7.Corner/Locatio
8.View/Environme
9.Fractional Sha
**Acres**
32.Pasture
33.Orchard
34.Softwood (FL)
35.Mixed Wood (FL
36.Hardwood (FL)
37.Softwood (TG)
38.Mixed Wood (TG
39.Hardwood (TG)
40.Wasteland
41.Open Space
42.Mobile Home Si
43.Condo Site
44.Lot Improvemen
45.Subdivision Lo
46.Heavy Ind Sit

Inspection Witnessed By:

X Date

| No./Date | Description | Date Insp. |
|---|---|---|
| | | |
| | | |
| | | |

Notes:

**Wade**

# Wade

Map Lot 003-004-1 | Account 118 | Location South Wade Rd | Card 1 Of 1 | 8/29/2023

| | | |
|---|---|---|
| Building Style **0** | | |
| 1.CONVENTI | 5.GARRISON | 9.GAMBREL |
| 2.RANCH | 6.SALT BOX | 10.OTHER |
| 3.RAISED R | 7.CONTEMP | 11.SPLIT |
| 4.CAPE | 8.LOG | 12.NE |
| Dwelling Units **0** | | |
| Other Units **0** | | |
| Stories **0** | | |
| 1.ONE STOR | 4.1.5 STOR | 7.1.25 STO |
| 2.TWO STOR | 5.1.75 STO | 8. |
| 3.THREE ST | 6.2.5 STOR | 9. |
| Exterior Walls **0** | | |
| 1.WOOD | 5.STUCKO | 9.T-111 |
| 2.VIN/AL | 6.BRICK | 10.OTHER |
| 3.COMPOS. | 7.STONE | 11.LOG |
| 4.ASBESTOS | 8.CONCRETE | 12. |
| Roof Surface **0** | | |
| 1.ASPHALT | 4.COMPOSIT | 7. |
| 2.SLATE | 5.WOOD | 8. |
| 3.METAL | 6.OTHER | 9. |
| SF Masonry Trim **0** | | |
| **0** | | |
| **0** | | |
| Year Built **0** | | |
| Year Remodeled **0** | | |
| Foundation **0** | | |
| 1.CONCRETE | 4.WOOD | 7. |
| 2.CONCRETE | 5.SLAB | 8. |
| 3.BRICK/ST | 6.PIERS | 9. |
| Basement **0** | | |
| 1.1/4 BASE | 4.FULL BAS | 7. |
| 2.1/2 BASE | 5.CRAWL | 8. |
| 3.3/4 BASE | 6. | 9.NO BASEM |
| Bsmt Gar # Cars **0** | | |
| Wet Basement **0** | | |
| 1.DRY BASE | 4. | 7. |
| 2.DAMP BAS | 5. | 8. |
| 3.WET BASE | 6. | 9.NO BASEM |

| | | |
|---|---|---|
| SF Bsmt Living **0** | | |
| Fin Bsmt Grade **0 0** | | |
| DIRT FLOOR **0** | | |
| Heat Type **100%** **0** | | |
| 1.HWBB | 5.FWA | 9.NOT HEAT |
| 2.HWCI | 6.GRAVWA | 10. |
| 3.HP | 7.ELECTRIC | 11. |
| 4.STEAM | 8.FL/WALL | 12. |
| Cool Type **0%** **9 NONE** | | |
| 1.REFRIG A | 4.W&C AIR | 7. |
| 2.EVAPORAT | 5. | 8. |
| 3.HEAT PUM | 6. | 9.NONE |
| Kitchen Style **0** | | |
| 1.GOOD | 4.OBSOLETE | 7. |
| 2.TYPICAL | 5. | 8. |
| 3.OLD STYL | 6. | 9.NONE |
| Bath(s) Style **0** | | |
| 1.GOOD | 4.OBSOLETE | 7. |
| 2.TYPICAL | 5. | 8. |
| 3.OLD STYL | 6. | 9.NONE |
| # Rooms **0** | | |
| # Bedrooms **0** | | |
| # Full Baths **0** | | |
| # Half Baths **0** | | |
| # Addn Fixtures **0** | | |
| # Fireplaces **0** | | |

TRIO Software
A Division of Harris Computer Systems

| | | |
|---|---|---|
| Layout **0** | | |
| 1.TYPICAL | 4. | 7. |
| 2.INADEQUA | 5. | 8. |
| 3.POOR | 6. | 9. |
| Attic **0** | | |
| 1.1/4 FINI | 4.FULL FIN | 7. |
| 2.1/2 FINI | 5.FL / STA | 8. |
| 3.3/4 FINI | 6. | 9.NONE |
| Insulation **0** | | |
| 1.FULLY IN | 4.MINIMAL | 7. |
| 2.HEAVY | 5.UNKNOWN | 8. |
| 3.CAPPED O | 6. | 9.NONE |
| Unfinished % **0%** | | |
| Grade & Factor **0 0%** | | |
| 1.E GRADE | 4.B GRADE | 7. |
| 2.D GRADE | 5.A GRADE | 8. |
| 3.C GRADE | 6.AA GRADE | 9.SAME |
| SQFT (Footprint) **0** | | |
| Condition **0** | | |
| 1.POOR | 4.AVERAGE | 7.VERY GOO |
| 2.FAIR | 5.ABOVE AV | 8.EXCELLEN |
| 3.BELOW AV | 6.GOOD | 9.SAME |
| Phys. % Good **0%** | | |
| Funct. % Good **100%** | | |
| Functional Code **9 None** | | |
| 1.Incomp | 4.LongTerm | 7.Layout |
| 2.Overbuil | 5.Utility | 8.Other |
| 3.Delap | 6.Style | 9.None |
| Econ. % Good **100%** | | |
| Economic Code **NONE** | | |
| 0.None | 3.NO ELECT | 6. |
| 1.LOCATION | 4.GENERATC | 7. |
| 2.ENCROACH | 5. | 8.OTHER |
| Entrance Code **5 ESTIMATED** | | |
| 1.INTERIOR | 4.UNOCCUPI | 7. |
| 2.REFUSED | 5.ESTIMATE | 8. |
| 3.INFO ONL | 6. | 9. |
| Information Code **5 ESTIMATE** | | |
| 1.OWNER | 4.AGENT | 7. |
| 2.RELATIVE | 5.ESTIMATE | 8. |
| 3.TENANT | 6.OTHER | 9. |

Date Inspected 7/14/2022

## Additions, Outbuildings & Improvements

| Type | Year | Units | Grade | Cond | Phys. | Funct. | Sound Value |
|---|---|---|---|---|---|---|---|
| | | | | | % | % | |
| | | | | | % | % | |
| | | | | | % | % | |
| | | | | | % | % | |
| | | | | | % | % | |
| | | | | | % | % | |
| | | | | | % | % | |
| | | | | | % | % | |
| | | | | | % | % | |
| | | | | | % | % | |

1.One Story Fram
2.Two Story Fram
3.Three Story Fr
4.1 & 1/2 Story
5.1 & 3/4 Story
6.2 & 1/2 Story
21.Open Porch
22.Enclosed Porch
23.Frame Garage
24.Frame Shed
25.1SF Bay Window
26.1SF Over Hang
27.Unfinished Bas
28.Unfinished Att
29.Finished Basem

Map Lot 003-005 Account 221 Location 287 South Wade Rd Card 1 Of 1 8/29/2023

CUNNINGHAM, KEVIN R
2630 SE 75 AVE
PORTLAND OR 97206

B1607P216 B5820P44 B5842P88

Previous Owner
Cunningham, Sheldon & Sandi
c\o Sheldon & Sandi Cunningham
287 South Wade Road
Wade ME 04786
Sale Date: 9/11/2018

Inspection Witnessed By:

X Date

| No./Date | Description | Date Insp. |
|---|---|---|
| | | |
| | | |
| | | |

Notes:

* 1SF Gar (2100): -15% functional due to size obsolensence.

**Wade**

## Property Data

Neighborhood **1 Rural**

Tree Growth Year **0**

X Coordinate

Y Coordinate

Zone/Land Use **1 Residential**

Secondary Zone

Topography **2 Rolling**

| | | |
|---|---|---|
| 1.Level | 4.Below Stre | 7.Steep |
| 2.Rolling | 5.Low | 8.Rough |
| 3.Above Stre | 6.Swampy | 9. |

Utilities **1 Drilled Well / Septic**

| | | |
|---|---|---|
| 1.Well+Septi | 4.Public Wat | 7.Cess Pool |
| 2.Drilled We | 5.Public Sew | 8.Holding Ta |
| 3.Septic Sys | 6.Dug Well | 9.NoW/NoSew |

Street **1 Paved**

| | | |
|---|---|---|
| 1.Paved | 4.Proposed | 7. |
| 2.Semi-Impro | 5.Private | 8. |
| 3.Gravel | 6. | 9.No Street |

LAND USE **0**

Building Use **0**

## Sale Data

Sale Date **9/11/2018**

Price **116,000**

Sale Type **2 Land & Building**

| | | |
|---|---|---|
| 1.Land | 4.Mobile | 7.C/I L&B |
| 2.L & B | 5.Other | 8. |
| 3.Building | 6.C/I Land | 9. |

Financing **1 Conventional**

| | | |
|---|---|---|
| 1.Convent | 4.Seller | 7. |
| 2.FHA/VA | 5.Private | 8. |
| 3.Assumed | 6.Cash | 9.Unknown |

Validity **2 Related Parties**

| | | |
|---|---|---|
| 1.Valid | 4.Split | 7.Renovate |
| 2.Related | 5.Partial | 8.Other |
| 3.Distress | 6.Exempt | 9. |

Verified **1 Buyer**

| | | |
|---|---|---|
| 1.Buyer | 4.Agent | 7.Family |
| 2.Seller | 5.Pub Rec | 8.Other |
| 3.Lender | 6.MLS | 9. |

## Assessment Record

| Year | Land | Buildings | Exempt | Total |
|---|---|---|---|---|
| 2017 | 21,900 | 93,300 | 0 | 115,200 |
| 2018 | 21,900 | 93,300 | 20,000 | 95,200 |
| 2020 | 21,900 | 93,300 | 25,000 | 90,200 |
| 2021 | 22,900 | 93,300 | 25,000 | 91,200 |
| 2022 | 34,800 | 138,800 | 25,000 | 148,600 |
| 2023 | 35,000 | 138,800 | 25,000 | 148,800 |

## Land Data

| Front Foot | Type | Effective Frontage | Effective Depth | Influence Factor | Influence Code |
|---|---|---|---|---|---|
| 11.Regular Lot | | | | % | |
| 12.Delta Triangle | | | | % | |
| 13.Nabla Triangle | | | | % | |
| 14.Rear Land | | | | % | |
| 15.Class I Road | | | | % | |
| | | | | % | |
| | | | | % | |
| **Square Foot** | | **Square Feet** | | | |
| 16.Class II Road | | | | % | |
| 17.Municipal Rese | | | | % | |
| 18.Munic Sep Lago | | | | % | |
| 19.Gravel Pit | | | | % | |
| 20.Industrial Bas | | | | % | |
| | | | | % | |
| | | | | % | |
| **Fract. Acre** | | **Acreage/Sites** | | | |
| 21.Developed Pave | 21 | 1.00 | 100 | % | 0 |
| 22.Undev Paved (F | 26 | 15.00 | 100 | % | 0 |
| 23.Developed Grav | 32 | 6.00 | 100 | % | 0 |
| **Acres** | 39 | 12.00 | 100 | % | 0 |
| 24.Undev Gravel ( | | | | % | |
| 26.Rear Land | | | | % | |
| 27.Backlot | | | | % | |
| 29.Pavement | | | | | |
| 30.Utility R O W | | | | | |
| 31.Tillable | | | | | |

**Total Acreage** 34.00

**Influence Codes**

1.Vacancy
2.Unimproved
3.Topography
4.Size/Shape
5.Access
6.Restriction
7.Corner/Locatio
8.View/Environme
9.Fractional Sha
**Acres**
32.Pasture
33.Orchard
34.Softwood (FL)
35.Mixed Wood (FL
36.Hardwood (FL)
37.Softwood (TG)
38.Mixed Wood (TG
39.Hardwood (TG)
40.Wasteland
41.Open Space
42.Mobile Home Si
43.Condo Site
44.Lot Improvemen
45.Subdivision Lo
46.Heavy Ind Sit

# Wade

Map Lot 003-005 | Account 221 | Location 287 South Wade Rd | Card 1 Of 1 | 8/29/2023

| | | | |
|---|---|---|---|
| Building Style | **1 CONVENTIONAL** | | |
| 1.CONVENTI | 5.GARRISON | 9.GAMBREL | |
| 2.RANCH | 6.SALT BOX | 10.OTHER | |
| 3.RAISED R | 7.CONTEMP | 11.SPLIT | |
| 4.CAPE | 8.LOG | 12.NE | |
| Dwelling Units | **1** | | |
| Other Units | **0** | | |
| Stories | **4 ONE & 1/2 STORY** | | |
| 1.ONE STOR | 4.1.5 STOR | 7.1.25 STO | |
| 2.TWO STOR | 5.1.75 STO | 8. | |
| 3.THREE ST | 6.2.5 STOR | 9. | |
| Exterior Walls | **2 VINYL/ALUMINUM** | | |
| 1.WOOD | 5.STUCKO | 9.T-111 | |
| 2.VIN/AL | 6.BRICK | 10.OTHER | |
| 3.COMPOS. | 7.STONE | 11.LOG | |
| 4.ASBESTOS | 8.CONCRETE | 12. | |
| Roof Surface | **3 METAL** | | |
| 1.ASPHALT | 4.COMPOSIT | 7. | |
| 2.SLATE | 5.WOOD | 8. | |
| 3.METAL | 6.OTHER | 9. | |
| SF Masonry Trim | **0** | | |
| | **0** | | |
| | **0** | | |
| Year Built | **1940** | | |
| Year Remodeled | **0** | | |
| Foundation | **3 BRICK/STONE** | | |
| 1.CONCRETE | 4.WOOD | 7. | |
| 2.CONCRETE | 5.SLAB | 8. | |
| 3.BRICK/ST | 6.PIERS | 9. | |
| Basement | **4 FULL BASEMENT** | | |
| 1.1/4 BASE | 4.FULL BAS | 7. | |
| 2.1/2 BASE | 5.CRAWL | 8. | |
| 3.3/4 BASE | 6. | 9.NO BASEM | |
| Bsmt Gar # Cars | **0** | | |
| Wet Basement | **3 WET BASEMENT** | | |
| 1.DRY BASE | 4. | 7. | |
| 2.DAMP BAS | 5. | 8. | |
| 3.WET BASE | 6. | 9.NO BASEM | |

| | | | |
|---|---|---|---|
| SF Bsmt Living | **0** | | |
| Fin Bsmt Grade | **0 0** | | |
| DIRT FLOOR | **0** | | |
| Heat Type | **100%** | **5 FORCED WARM AIR** | |
| 1.HWBB | 5.FWA | 9.NOT HEAT | |
| 2.HWCI | 6.GRAVWA | 10. | |
| 3.HP | 7.ELECTRIC | 11. | |
| 4.STEAM | 8.FL/WALL | 12. | |
| Cool Type | **0%** | **9 NONE** | |
| 1.REFRIG A | 4.W&C AIR | 7. | |
| 2.EVAPORAT | 5. | 8. | |
| 3.HEAT PUM | 6. | 9.NONE | |
| Kitchen Style | **2 TYPICAL** | | |
| 1.GOOD | 4.OBSOLETE | 7. | |
| 2.TYPICAL | 5. | 8. | |
| 3.OLD STYL | 6. | 9.NONE | |
| Bath(s) Style | **2 TYPICAL** | | |
| 1.GOOD | 4.OBSOLETE | 7. | |
| 2.TYPICAL | 5. | 8. | |
| 3.OLD STYL | 6. | 9.NONE | |
| # Rooms | **8** | | |
| # Bedrooms | **4** | | |
| # Full Baths | **2** | | |
| # Half Baths | **0** | | |
| # Addn Fixtures | **0** | | |
| # Fireplaces | **0** | | |

TRIO Software
A Division of Harris Computer Systems

| | | | |
|---|---|---|---|
| Layout | **1 TYPICAL** | | |
| 1.TYPICAL | 4. | 7. | |
| 2.INADEQUA | 5. | 8. | |
| 3.POOR | 6. | 9. | |
| Attic | **9 NONE** | | |
| 1.1/4 FINI | 4.FULL FIN | 7. | |
| 2.1/2 FINI | 5.FL / STA | 8. | |
| 3.3/4 FINI | 6. | 9.NONE | |
| Insulation | **1 FULLY INSULATED** | | |
| 1.FULLY IN | 4.MINIMAL | 7. | |
| 2.HEAVY | 5.UNKNOWN | 8. | |
| 3.CAPPED O | 6. | 9.NONE | |
| Unfinished % | **0%** | | |
| Grade & Factor | **3 AVERAGE QUALITY** | | |
| 1.E GRADE | 4.B GRADE | 7. | |
| 2.D GRADE | 5.A GRADE | 8. | |
| 3.C GRADE | 6.AA GRADE | 9.SAME | |
| SQFT (Footprint) | **420** | | |
| Condition | **4 AVERAGE** | | |
| 1.POOR | 4.AVERAGE | 7.VERY GOO | |
| 2.FAIR | 5.ABOVE AV | 8.EXCELLEN | |
| 3.BELOW AV | 6.GOOD | 9.SAME | |
| Phys. % Good | **0%** | | |
| Funct. % Good | **100%** | | |
| Functional Code | **9 None** | | |
| 1.Incomp | 4.LongTerm | 7.Layout | |
| 2.Overbuil | 5.Utility | 8.Other | |
| 3.Delap | 6.Style | 9.None | |
| Econ. % Good | **100%** | | |
| Economic Code | **NONE** | | |
| 0.None | 3.NO ELECT | 6. | |
| 1.LOCATION | 4.GENERATC | 7. | |
| 2.ENCROACH | 5. | 8.OTHER | |
| Entrance Code | **1 INTERIOR INSPECT** | | |
| 1.INTERIOR | 4.UNOCCUPI | 7. | |
| 2.REFUSED | 5.ESTIMATE | 8. | |
| 3.INFO ONL | 6. | 9. | |
| Information Code | **1 OWNER** | | |
| 1.OWNER | 4.AGENT | 7. | |
| 2.RELATIVE | 5.ESTIMATE | 8. | |
| 3.TENANT | 6.OTHER | 9. | |

Date Inspected 7/11/2022

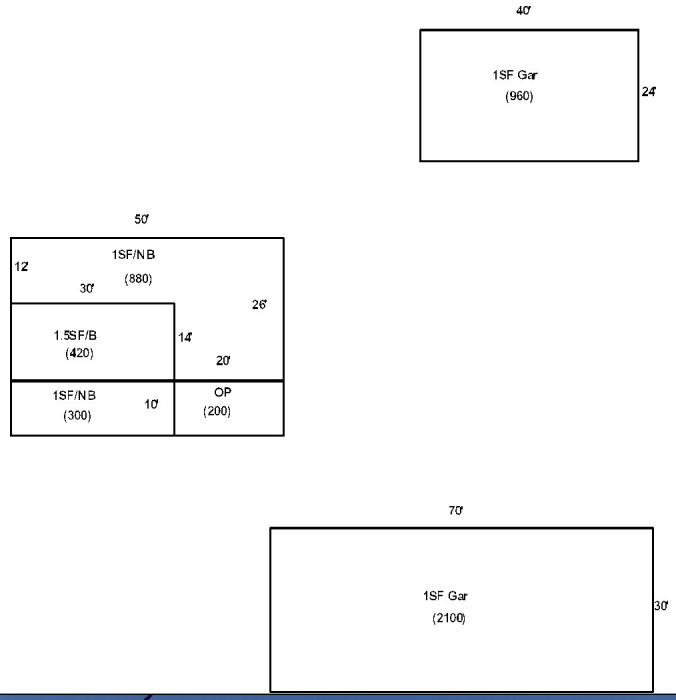

## Additions, Outbuildings & Improvements

| Type | Year | Units | Grade | Cond | Phys. | Funct. | Sound Value |
|---|---|---|---|---|---|---|---|
| 1 One Story Frame | 1960 | 300 | 9 100 | 9 | 0 % | 100 % | |
| 1 One Story Frame | 1960 | 880 | 9 100 | 9 | 0 % | 100 % | |
| 21 Open Porch | 1960 | 200 | 3 100 | 4 | 0 % | 100 % | |
| 23 Frame Garage | 2003 | 960 | 3 100 | 4 | 0 % | 100 % | |
| 23 Frame Garage | 1981 | 2100 | 3 100 | 4 | 0 % | 85 % | |
| | | | | | % | % | |
| | | | | | % | % | |
| | | | | | % | % | |
| | | | | | % | % | |
| | | | | | % | % | |

1.One Story Fram
2.Two Story Fram
3.Three Story Fr
4.1 & 1/2 Story
5.1 & 3/4 Story
6.2 & 1/2 Story
21.Open Porch
22.Enclosed Porch
23.Frame Garage
24.Frame Shed
25.1SF Bay Window
26.1SF Over Hang
27.Unfinished Bas
28.Unfinished Att
29.Finished Basem

Map Lot 003-006,007,08,12 Account 101 Location 369 South Wade Rd Card 1 Of 1 8/29/2023

Klei, Hugh T
76 Turnpike Road
Willington CT 06279

B4894P218 B5748P239

Previous Owner
Klei Trust, Irene
Herbert E. Klei, Trustee
76 Turnpike Road
Willington CT 06279
Sale Date: 12/28/2017

Inspection Witnessed By:

X Date

| No./Date | Description | Date Insp. |
|---|---|---|
| | | |
| | | |
| | | |

Notes:

**Wade**

## Property Data

Neighborhood **1 Rural**

Tree Growth Year **0**

X Coordinate

Y Coordinate

Zone/Land Use **1 Residential**

Secondary Zone

Topography **2 Rolling**

| | | |
|---|---|---|
| 1.Level | 4.Below Stre | 7.Steep |
| 2.Rolling | 5.Low | 8.Rough |
| 3.Above Stre | 6.Swampy | 9. |

Utilities **1 Drilled Well / Septic**

| | | |
|---|---|---|
| 1.Well+Septi | 4.Public Wat | 7.Cess Pool |
| 2.Drilled We | 5.Public Sew | 8.Holding Ta |
| 3.Septic Sys | 6.Dug Well | 9.NoW/NoSew |

Street **1 Paved**

| | | |
|---|---|---|
| 1.Paved | 4.Proposed | 7. |
| 2.Semi-Impro | 5.Private | 8. |
| 3.Gravel | 6. | 9.No Street |

LAND USE **0**

Building Use **0**

## Sale Data

Sale Date **12/28/2017**

Price

Sale Type **1 Land Only**

| | | |
|---|---|---|
| 1.Land | 4.Mobile | 7.C/I L&B |
| 2.L & B | 5.Other | 8. |
| 3.Building | 6.C/I Land | 9. |

Financing **9 Unknown**

| | | |
|---|---|---|
| 1.Convent | 4.Seller | 7. |
| 2.FHA/VA | 5.Private | 8. |
| 3.Assumed | 6.Cash | 9.Unknown |

Validity **2 Related Parties**

| | | |
|---|---|---|
| 1.Valid | 4.Split | 7.Renovate |
| 2.Related | 5.Partial | 8.Other |
| 3.Distress | 6.Exempt | 9. |

Verified **7 Family Member**

| | | |
|---|---|---|
| 1.Buyer | 4.Agent | 7.Family |
| 2.Seller | 5.Pub Rec | 8.Other |
| 3.Lender | 6.MLS | 9. |

## Assessment Record

| Year | Land | Buildings | Exempt | Total |
|---|---|---|---|---|
| 2017 | 24,300 | 71,900 | 0 | 96,200 |
| 2018 | 24,100 | 71,900 | 0 | 96,000 |
| 2020 | 23,200 | 71,900 | 0 | 95,100 |
| 2021 | 23,300 | 71,900 | 0 | 95,200 |
| 2022 | 36,100 | 74,200 | 0 | 110,300 |
| 2023 | 36,400 | 74,200 | 0 | 110,600 |

## Land Data

| Front Foot | Type | Effective Frontage | Effective Depth | Influence Factor | Influence Code |
|---|---|---|---|---|---|
| 11.Regular Lot | | | | % | |
| 12.Delta Triangle | | | | % | |
| 13.Nabla Triangle | | | | % | |
| 14.Rear Land | | | | % | |
| 15.Class I Road | | | | % | |
| | | | | % | |
| | | | | % | |
| **Square Foot** | | **Square Feet** | | | |
| 16.Class II Road | 29 | 3,159 | | 75 % | 2 |
| 17.Municipal Rese | | | | % | |
| 18.Munic Sep Lago | | | | % | |
| 19.Gravel Pit | | | | % | |
| 20.Industrial Bas | | | | % | |
| | | | | % | |
| | | | | % | |
| **Fract. Acre** | | **Acreage/Sites** | | | |
| 21.Developed Pave | 21 | 1.00 | | 100 % | 0 |
| 22.Undev Paved (F | 26 | 1.30 | | 100 % | 0 |
| 23.Developed Grav | 40 | 2.30 | | 100 % | 0 |
| **Acres** | 38 | 44.50 | | 100 % | 0 |
| 24.Undev Gravel ( | 39 | 4.10 | | 100 % | 0 |
| 26.Rear Land | 37 | 7.50 | | 100 % | 0 |
| 27.Backlot | | | | % | |
| 29.Pavement | | | | | |
| 30.Utility R O W | | | | | |
| 31.Tillable | | | | | |

**Total Acreage** 60.70

### Influence Codes

1.Vacancy
2.Unimproved
3.Topography
4.Size/Shape
5.Access
6.Restriction
7.Corner/Locatio
8.View/Environme
9.Fractional Sha
**Acres**
32.Pasture
33.Orchard
34.Softwood (FL)
35.Mixed Wood (FL
36.Hardwood (FL)
37.Softwood (TG)
38.Mixed Wood (TG
39.Hardwood (TG)
40.Wasteland
41.Open Space
42.Mobile Home Si
43.Condo Site
44.Lot Improvemen
45.Subdivision Lo
46.Heavy Ind Sit

# Wade

Map Lot 003-006,007,08,12 | Account 101 | Location 369 South Wade Rd | Card 1 Of 1 | 8/29/2023

| | | | |
|---|---|---|---|
| Building Style | **1 CONVENTIONAL** | | |
| 1.CONVENTI | 5.GARRISON | 9.GAMBREL | |
| 2.RANCH | 6.SALT BOX | 10.OTHER | |
| 3.RAISED R | 7.CONTEMP | 11.SPLIT | |
| 4.CAPE | 8.LOG | 12.NE | |
| Dwelling Units | **1** | | |
| Other Units | **0** | | |
| Stories | **4 ONE & 1/2 STORY** | | |
| 1.ONE STOR | 4.1.5 STOR | 7.1.25 STO | |
| 2.TWO STOR | 5.1.75 STO | 8. | |
| 3.THREE ST | 6.2.5 STOR | 9. | |
| Exterior Walls | **6 BRICK** | | |
| 1.WOOD | 5.STUCKO | 9.T-111 | |
| 2.VIN/AL | 6.BRICK | 10.OTHER | |
| 3.COMPOS. | 7.STONE | 11.LOG | |
| 4.ASBESTOS | 8.CONCRETE | 12. | |
| Roof Surface | **3 METAL** | | |
| 1.ASPHALT | 4.COMPOSIT | 7. | |
| 2.SLATE | 5.WOOD | 8. | |
| 3.METAL | 6.OTHER | 9. | |
| SF Masonry Trim | **0** | | |
| | **0** | | |
| | **0** | | |
| Year Built | **1970** | | |
| Year Remodeled | **0** | | |
| Foundation | **1 CONCRETE** | | |
| 1.CONCRETE | 4.WOOD | 7. | |
| 2.CONCRETE | 5.SLAB | 8. | |
| 3.BRICK/ST | 6.PIERS | 9. | |
| Basement | **5 CRAWL** | | |
| 1.1/4 BASE | 4.FULL BAS | 7. | |
| 2.1/2 BASE | 5.CRAWL | 8. | |
| 3.3/4 BASE | 6. | 9.NO BASEM | |
| Bsmt Gar # Cars | **0** | | |
| Wet Basement | **1 DRY BASEMENT** | | |
| 1.DRY BASE | 4. | 7. | |
| 2.DAMP BAS | 5. | 8. | |
| 3.WET BASE | 6. | 9.NO BASEM | |

| | | | |
|---|---|---|---|
| SF Bsmt Living | **0** | | |
| Fin Bsmt Grade | **0 0** | | |
| DIRT FLOOR | **0** | | |
| Heat Type | **100%** | **5 FORCED WARM AIR** | |
| 1.HWBB | 5.FWA | 9.NOT HEAT | |
| 2.HWCI | 6.GRAVWA | 10. | |
| 3.HP | 7.ELECTRIC | 11. | |
| 4.STEAM | 8.FL/WALL | 12. | |
| Cool Type | **0%** | **9 NONE** | |
| 1.REFRIG A | 4.W&C AIR | 7. | |
| 2.EVAPORAT | 5. | 8. | |
| 3.HEAT PUM | 6. | 9.NONE | |
| Kitchen Style | **2 TYPICAL** | | |
| 1.GOOD | 4.OBSOLETE | 7. | |
| 2.TYPICAL | 5. | 8. | |
| 3.OLD STYL | 6. | 9.NONE | |
| Bath(s) Style | **2 TYPICAL** | | |
| 1.GOOD | 4.OBSOLETE | 7. | |
| 2.TYPICAL | 5. | 8. | |
| 3.OLD STYL | 6. | 9.NONE | |
| # Rooms | **5** | | |
| # Bedrooms | **2** | | |
| # Full Baths | **1** | | |
| # Half Baths | **0** | | |
| # Addn Fixtures | **0** | | |
| # Fireplaces | **0** | | |

TRIO Software
A Division of Harris Computer Systems

| | | | |
|---|---|---|---|
| Layout | **1 TYPICAL** | | |
| 1.TYPICAL | 4. | 7. | |
| 2.INADEQUA | 5. | 8. | |
| 3.POOR | 6. | 9. | |
| Attic | **9 NONE** | | |
| 1.1/4 FINI | 4.FULL FIN | 7. | |
| 2.1/2 FINI | 5.FL / STA | 8. | |
| 3.3/4 FINI | 6. | 9.NONE | |
| Insulation | **1 FULLY INSULATED** | | |
| 1.FULLY IN | 4.MINIMAL | 7. | |
| 2.HEAVY | 5.UNKNOWN | 8. | |
| 3.CAPPED O | 6. | 9.NONE | |
| Unfinished % | **0%** | | |
| Grade & Factor | **3 AVERAGE QUALITY** | | |
| 1.E GRADE | 4.B GRADE | 7. | |
| 2.D GRADE | 5.A GRADE | 8. | |
| 3.C GRADE | 6.AA GRADE | 9.SAME | |
| SQFT (Footprint) | **656** | | |
| Condition | **7 VERY GOOD** | | |
| 1.POOR | 4.AVERAGE | 7.VERY GOO | |
| 2.FAIR | 5.ABOVE AV | 8.EXCELLEN | |
| 3.BELOW AV | 6.GOOD | 9.SAME | |
| Phys. % Good | **0%** | | |
| Funct. % Good | **100%** | | |
| Functional Code | **9 None** | | |
| 1.Incomp | 4.LongTerm | 7.Layout | |
| 2.Overbuil | 5.Utility | 8.Other | |
| 3.Delap | 6.Style | 9.None | |
| Econ. % Good | **100%** | | |
| Economic Code | **NONE** | | |
| 0.None | 3.NO ELECT | 6. | |
| 1.LOCATION | 4.GENERATC | 7. | |
| 2.ENCROACH | 5. | 8.OTHER | |
| Entrance Code | **5 ESTIMATED** | | |
| 1.INTERIOR | 4.UNOCCUPI | 7. | |
| 2.REFUSED | 5.ESTIMATE | 8. | |
| 3.INFO ONL | 6. | 9. | |
| Information Code | **5 ESTIMATE** | | |
| 1.OWNER | 4.AGENT | 7. | |
| 2.RELATIVE | 5.ESTIMATE | 8. | |
| 3.TENANT | 6.OTHER | 9. | |

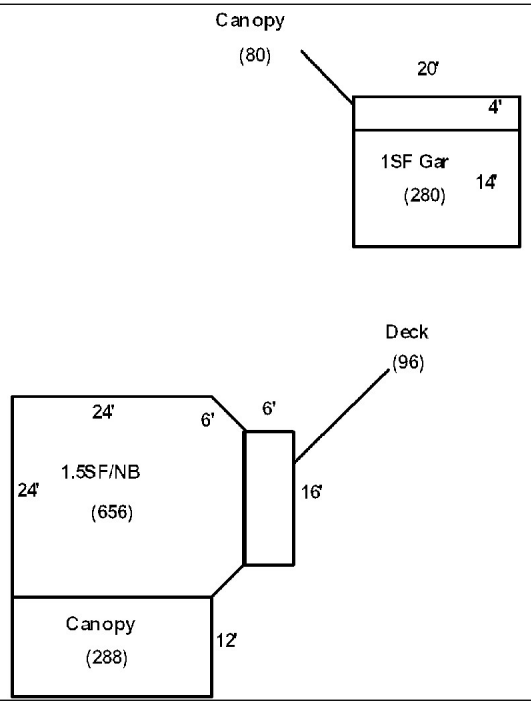


Date Inspected 7/11/2022

## Additions, Outbuildings & Improvements

| Type | Year | Units | Grade | Cond | Phys. | Funct. | Sound Value |
|---|---|---|---|---|---|---|---|
| 68 Deck | 1990 | 96 | 2 100 | 3 | 0 % | 100 % | |
| 61 Canopy / Carport | 1990 | 288 | 2 100 | 3 | 0 % | 100 % | |
| 23 Frame Garage | 1990 | 280 | 2 100 | 3 | 0 % | 100 % | |
| 61 Canopy / Carport | 1990 | 80 | 2 100 | 3 | 0 % | 100 % | |
| | | | | | % | % | |
| | | | | | % | % | |
| | | | | | % | % | |
| | | | | | % | % | |
| | | | | | % | % | |
| | | | | | % | % | |

1.One Story Fram
2.Two Story Fram
3.Three Story Fr
4.1 & 1/2 Story
5.1 & 3/4 Story
6.2 & 1/2 Story
21.Open Porch
22.Enclosed Porch
23.Frame Garage
24.Frame Shed
25.1SF Bay Window
26.1SF Over Hang
27.Unfinished Bas
28.Unfinished Att
29.Finished Basem

Map Lot 003-009 & 010 | Account 112 | Location South Wade Rd | Card 1 Of 1 | 8/29/2023

Klei, Herbert E
76 Turnpike Rd
Willington CT 06279

B2166P37

Previous Owner
Klei, Jr., Herbert E.
& Irene Klei Trust
76 Turnpike Road
Willington CT 06279
Sale Date: 2/12/2018

Inspection Witnessed By:

X Date

| No./Date | Description | Date Insp. |
|---|---|---|
| | | |
| | | |
| | | |

Notes:

**Wade**

## Property Data

Neighborhood **1 Rural**

Tree Growth Year **0**

X Coordinate

Y Coordinate

Zone/Land Use **1 Residential**

Secondary Zone

Topography **2 Rolling**

1.Level 4.Below Stre 7.Steep
2.Rolling 5.Low 8.Rough
3.Above Stre 6.Swampy 9.

Utilities **1 Drilled Well / Septic**

1.Well+Septi 4.Public Wat 7.Cess Pool
2.Drilled We 5.Public Sew 8.Holding Ta
3.Septic Sys 6.Dug Well 9.NoW/NoSew

Street **1 Paved**

1.Paved 4.Proposed 7.
2.Semi-Impro 5.Private 8.
3.Gravel 6. 9.No Street

LAND USE **0**

Building Use **0**

## Sale Data

Sale Date **2/12/2018**

Price

Sale Type **1 Land Only**

1.Land 4.Mobile 7.C/I L&B
2.L & B 5.Other 8.
3.Building 6.C/I Land 9.

Financing **9 Unknown**

1.Convent 4.Seller 7.
2.FHA/VA 5.Private 8.
3.Assumed 6.Cash 9.Unknown

Validity **2 Related Parties**

1.Valid 4.Split 7.Renovate
2.Related 5.Partial 8.Other
3.Distress 6.Exempt 9.

Verified **7 Family Member**

1.Buyer 4.Agent 7.Family
2.Seller 5.Pub Rec 8.Other
3.Lender 6.MLS 9.

## Assessment Record

| Year | Land | Buildings | Exempt | Total |
|---|---|---|---|---|
| 2017 | 22,900 | 28,500 | 0 | 51,400 |
| 2018 | 22,700 | 28,500 | 0 | 51,200 |
| 2020 | 20,800 | 28,500 | 0 | 49,300 |
| 2021 | 20,800 | 28,500 | 0 | 49,300 |
| 2022 | 29,300 | 36,800 | 0 | 66,100 |
| 2023 | 29,600 | 36,800 | 0 | 66,400 |

## Land Data

**Front Foot**

11.Regular Lot
12.Delta Triangle
13.Nabla Triangle
14.Rear Land
15.Class I Road

**Square Foot**

16.Class II Road
17.Municipal Rese
18.Munic Sep Lago
19.Gravel Pit
20.Industrial Bas

**Fract. Acre**

21.Developed Pave
22.Undev Paved (F
23.Developed Grav
**Acres**
24.Undev Gravel (
26.Rear Land
27.Backlot
29.Pavement
30.Utility R O W
31.Tillable

| Type | Effective Frontage | Effective Depth | Influence Factor | Influence Code |
|---|---|---|---|---|
| | | | % | |
| | | | % | |
| | | | % | |
| | | | % | |
| | | | % | |
| | | | % | |
| | | | % | |
| **Square Feet** | | | | |
| | | | % | |
| | | | % | |
| | | | % | |
| | | | % | |
| | | | % | |
| | | | % | |
| | | | % | |
| **Acreage/Sites** | | | | |
| 21 | 1.00 | 100 | % | 0 |
| 37 | 10.20 | 100 | % | 0 |
| 38 | 41.10 | 100 | % | 0 |
| 39 | 5.70 | 100 | % | 0 |
| | | | % | |
| | | | % | |
| | | | % | |

**Total Acreage** 58.00

**Influence Codes**

1.Vacancy
2.Unimproved
3.Topography
4.Size/Shape
5.Access
6.Restriction
7.Corner/Locatio
8.View/Environme
9.Fractional Sha
**Acres**
32.Pasture
33.Orchard
34.Softwood (FL)
35.Mixed Wood (FL
36.Hardwood (FL)
37.Softwood (TG)
38.Mixed Wood (TG
39.Hardwood (TG)
40.Wasteland
41.Open Space
42.Mobile Home Si
43.Condo Site
44.Lot Improvemen
45.Subdivision Lo
46.Heavy Ind Sit

# Wade

Map Lot 003-009 & 010 | Account 112 | Location South Wade Rd | Card 1 Of 1 | 8/29/2023

| | | |
|---|---|---|
| Building Style **8 LOG** | | |
| 1.CONVENTI | 5.GARRISON | 9.GAMBREL |
| 2.RANCH | 6.SALT BOX | 10.OTHER |
| 3.RAISED R | 7.CONTEMP | 11.SPLIT |
| 4.CAPE | 8.LOG | 12.NE |
| Dwelling Units **1** | | |
| Other Units **0** | | |
| Stories **4 ONE & 1/2 STORY** | | |
| 1.ONE STOR | 4.1.5 STOR | 7.1.25 STO |
| 2.TWO STOR | 5.1.75 STO | 8. |
| 3.THREE ST | 6.2.5 STOR | 9. |
| Exterior Walls **11 LOG** | | |
| 1.WOOD | 5.STUCKO | 9.T-111 |
| 2.VIN/AL | 6.BRICK | 10.OTHER |
| 3.COMPOS. | 7.STONE | 11.LOG |
| 4.ASBESTOS | 8.CONCRETE | 12. |
| Roof Surface **3 METAL** | | |
| 1.ASPHALT | 4.COMPOSIT | 7. |
| 2.SLATE | 5.WOOD | 8. |
| 3.METAL | 6.OTHER | 9. |
| SF Masonry Trim **0** | | |
| **0** | | |
| **0** | | |
| Year Built **1970** | | |
| Year Remodeled **0** | | |
| Foundation **6 PIERS** | | |
| 1.CONCRETE | 4.WOOD | 7. |
| 2.CONCRETE | 5.SLAB | 8. |
| 3.BRICK/ST | 6.PIERS | 9. |
| Basement **9 NO BASEMENT** | | |
| 1.1/4 BASE | 4.FULL BAS | 7. |
| 2.1/2 BASE | 5.CRAWL | 8. |
| 3.3/4 BASE | 6. | 9.NO BASEM |
| Bsmt Gar # Cars **0** | | |
| Wet Basement **9 NO BASEMENT** | | |
| 1.DRY BASE | 4. | 7. |
| 2.DAMP BAS | 5. | 8. |
| 3.WET BASE | 6. | 9.NO BASEM |

| | | |
|---|---|---|
| SF Bsmt Living **0** | | |
| Fin Bsmt Grade **0 0** | | |
| DIRT FLOOR **0** | | |
| Heat Type **100%** **9 NOT HEATED** | | |
| 1.HWBB | 5.FWA | 9.NOT HEAT |
| 2.HWCI | 6.GRAVWA | 10. |
| 3.HP | 7.ELECTRIC | 11. |
| 4.STEAM | 8.FL/WALL | 12. |
| Cool Type **0%** **9 NONE** | | |
| 1.REFRIG A | 4.W&C AIR | 7. |
| 2.EVAPORAT | 5. | 8. |
| 3.HEAT PUM | 6. | 9.NONE |
| Kitchen Style **2 TYPICAL** | | |
| 1.GOOD | 4.OBSOLETE | 7. |
| 2.TYPICAL | 5. | 8. |
| 3.OLD STYL | 6. | 9.NONE |
| Bath(s) Style **2 TYPICAL** | | |
| 1.GOOD | 4.OBSOLETE | 7. |
| 2.TYPICAL | 5. | 8. |
| 3.OLD STYL | 6. | 9.NONE |
| # Rooms **5** | | |
| # Bedrooms **2** | | |
| # Full Baths **1** | | |
| # Half Baths **0** | | |
| # Addn Fixtures **0** | | |
| # Fireplaces **0** | | |

TRIO Software
A Division of Harris Computer Systems

| | | |
|---|---|---|
| Layout **1 TYPICAL** | | |
| 1.TYPICAL | 4. | 7. |
| 2.INADEQUA | 5. | 8. |
| 3.POOR | 6. | 9. |
| Attic **9 NONE** | | |
| 1.1/4 FINI | 4.FULL FIN | 7. |
| 2.1/2 FINI | 5.FL / STA | 8. |
| 3.3/4 FINI | 6. | 9.NONE |
| Insulation **4 MINIMAL** | | |
| 1.FULLY IN | 4.MINIMAL | 7. |
| 2.HEAVY | 5.UNKNOWN | 8. |
| 3.CAPPED O | 6. | 9.NONE |
| Unfinished % **0%** | | |
| Grade & Factor **3 AVERAGE QUALITY** | | |
| 1.E GRADE | 4.B GRADE | 7. |
| 2.D GRADE | 5.A GRADE | 8. |
| 3.C GRADE | 6.AA GRADE | 9.SAME |
| SQFT (Footprint) **624** | | |
| Condition **4 AVERAGE** | | |
| 1.POOR | 4.AVERAGE | 7.VERY GOO |
| 2.FAIR | 5.ABOVE AV | 8.EXCELLEN |
| 3.BELOW AV | 6.GOOD | 9.SAME |
| Phys. % Good **0%** | | |
| Funct. % Good **100%** | | |
| Functional Code **9 None** | | |
| 1.Incomp | 4.LongTerm | 7.Layout |
| 2.Overbuil | 5.Utility | 8.Other |
| 3.Delap | 6.Style | 9.None |
| Econ. % Good **100%** | | |
| Economic Code **NONE** | | |
| 0.None | 3.NO ELECT | 6. |
| 1.LOCATION | 4.GENERATC | 7. |
| 2.ENCROACH | 5. | 8.OTHER |
| Entrance Code **5 ESTIMATED** | | |
| 1.INTERIOR | 4.UNOCCUPI | 7. |
| 2.REFUSED | 5.ESTIMATE | 8. |
| 3.INFO ONL | 6. | 9. |
| Information Code **5 ESTIMATE** | | |
| 1.OWNER | 4.AGENT | 7. |
| 2.RELATIVE | 5.ESTIMATE | 8. |
| 3.TENANT | 6.OTHER | 9. |

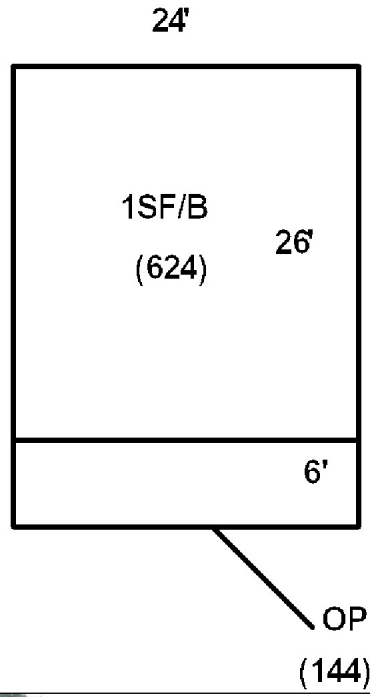

Date Inspected 7/11/2022

## Additions, Outbuildings & Improvements

| Type | Year | Units | Grade | Cond | Phys. | Funct. | Sound Value |
|---|---|---|---|---|---|---|---|
| 21 Open Porch | 1970 | 144 | 2 100 | 3 | 0 % | 100 % | |
| | | | | | % | % | |
| | | | | | % | % | |
| | | | | | % | % | |
| | | | | | % | % | |
| | | | | | % | % | |
| | | | | | % | % | |
| | | | | | % | % | |
| | | | | | % | % | |
| | | | | | % | % | |

1.One Story Fram
2.Two Story Fram
3.Three Story Fr
4.1 & 1/2 Story
5.1 & 3/4 Story
6.2 & 1/2 Story
21.Open Porch
22.Enclosed Porch
23.Frame Garage
24.Frame Shed
25.1SF Bay Window
26.1SF Over Hang
27.Unfinished Bas
28.Unfinished Att
29.Finished Basem

Map Lot 003-013 | Account 107 | Location Off South Wade Road | Card 1 Of 1 | 8/29/2023

Klei, Jr., Herbert E.
76 Turnpike Road
Willington CT 06279

B5368P43

## Property Data

Neighborhood **1 Rural**

Tree Growth Year **0**

X Coordinate

Y Coordinate

Zone/Land Use **1 Residential**

Secondary Zone

Topography **2 Rolling**

| | | |
|---|---|---|
| 1.Level | 4.Below Stre | 7.Steep |
| 2.Rolling | 5.Low | 8.Rough |
| 3.Above Stre | 6.Swampy | 9. |

Utilities **1 Drilled Well / Septic**

| | | |
|---|---|---|
| 1.Well+Septi | 4.Public Wat | 7.Cess Pool |
| 2.Drilled We | 5.Public Sew | 8.Holding Ta |
| 3.Septic Sys | 6.Dug Well | 9.NoW/NoSew |

Street **1 Paved**

| | | |
|---|---|---|
| 1.Paved | 4.Proposed | 7. |
| 2.Semi-Impro | 5.Private | 8. |
| 3.Gravel | 6. | 9.No Street |

LAND USE **0**

Building Use **0**

## Sale Data

Sale Date

Price

Sale Type

| | | |
|---|---|---|
| 1.Land | 4.Mobile | 7.C/I L&B |
| 2.L & B | 5.Other | 8. |
| 3.Building | 6.C/I Land | 9. |

Financing

| | | |
|---|---|---|
| 1.Convent | 4.Seller | 7. |
| 2.FHA/VA | 5.Private | 8. |
| 3.Assumed | 6.Cash | 9.Unknown |

Validity

| | | |
|---|---|---|
| 1.Valid | 4.Split | 7.Renovate |
| 2.Related | 5.Partial | 8.Other |
| 3.Distress | 6.Exempt | 9. |

Verified

| | | |
|---|---|---|
| 1.Buyer | 4.Agent | 7.Family |
| 2.Seller | 5.Pub Rec | 8.Other |
| 3.Lender | 6.MLS | 9. |

## Assessment Record

| Year | Land | Buildings | Exempt | Total |
|---|---|---|---|---|
| 2017 | 18,800 | 21,000 | 0 | 39,800 |
| 2018 | 18,700 | 21,000 | 0 | 39,700 |
| 2020 | 18,300 | 21,000 | 0 | 39,300 |
| 2021 | 18,800 | 21,000 | 0 | 39,800 |
| 2022 | 27,400 | 30,900 | 0 | 58,300 |
| 2023 | 27,600 | 30,900 | 0 | 58,500 |

## Land Data

| Front Foot | Type | Effective Frontage | Effective Depth | Influence Factor | Influence Code |
|---|---|---|---|---|---|
| 11.Regular Lot | | | | % | |
| 12.Delta Triangle | | | | % | |
| 13.Nabla Triangle | | | | % | |
| 14.Rear Land | | | | % | |
| 15.Class I Road | | | | % | |
| | | | | % | |
| | | | | % | |
| **Square Foot** | | **Square Feet** | | | |
| 16.Class II Road | | | | % | |
| 17.Municipal Rese | | | | % | |
| 18.Munic Sep Lago | | | | % | |
| 19.Gravel Pit | | | | % | |
| 20.Industrial Bas | | | | % | |
| | | | | % | |
| | | | | % | |
| **Fract. Acre** | | **Acreage/Sites** | | | |
| 21.Developed Pave | 21 | 1.00 | 100 | % | 0 |
| 22.Undev Paved (F | 32 | 3.00 | 100 | % | 0 |
| 23.Developed Grav | 38 | 23.50 | 100 | % | 0 |
| **Acres** | 39 | 5.50 | 100 | % | 0 |
| 24.Undev Gravel ( | | | | % | |
| 26.Rear Land | | | | % | |
| 27.Backlot | | | | % | |
| 29.Pavement | | | | | |
| 30.Utility R O W | | | | | |
| 31.Tillable | | | | | |

**Total Acreage** 33.00

### Influence Codes

1.Vacancy
2.Unimproved
3.Topography
4.Size/Shape
5.Access
6.Restriction
7.Corner/Locatio
8.View/Environme
9.Fractional Sha
**Acres**
32.Pasture
33.Orchard
34.Softwood (FL)
35.Mixed Wood (FL
36.Hardwood (FL)
37.Softwood (TG)
38.Mixed Wood (TG
39.Hardwood (TG)
40.Wasteland
41.Open Space
42.Mobile Home Si
43.Condo Site
44.Lot Improvemen
45.Subdivision Lo
46.Heavy Ind Sit

Inspection Witnessed By:

X Date

| No./Date | Description | Date Insp. |
|---|---|---|
| | | |
| | | |
| | | |

Notes:

**Wade**

# Wade

Map Lot 003-013 | Account 107 | Location Off South Wade Road | Card 1 Of 1 | 8/29/2023

| | | |
|---|---|---|
| Building Style **0** | | |
| 1.CONVENTI | 5.GARRISON | 9.GAMBREL |
| 2.RANCH | 6.SALT BOX | 10.OTHER |
| 3.RAISED R | 7.CONTEMP | 11.SPLIT |
| 4.CAPE | 8.LOG | 12.NE |
| Dwelling Units **0** | | |
| Other Units **0** | | |
| Stories **0** | | |
| 1.ONE STOR | 4.1.5 STOR | 7.1.25 STO |
| 2.TWO STOR | 5.1.75 STO | 8. |
| 3.THREE ST | 6.2.5 STOR | 9. |
| Exterior Walls **0** | | |
| 1.WOOD | 5.STUCKO | 9.T-111 |
| 2.VIN/AL | 6.BRICK | 10.OTHER |
| 3.COMPOS. | 7.STONE | 11.LOG |
| 4.ASBESTOS | 8.CONCRETE | 12. |
| Roof Surface **0** | | |
| 1.ASPHALT | 4.COMPOSIT | 7. |
| 2.SLATE | 5.WOOD | 8. |
| 3.METAL | 6.OTHER | 9. |
| SF Masonry Trim **0** | | |
| **0** | | |
| **0** | | |
| Year Built **0** | | |
| Year Remodeled **0** | | |
| Foundation **0** | | |
| 1.CONCRETE | 4.WOOD | 7. |
| 2.CONCRETE | 5.SLAB | 8. |
| 3.BRICK/ST | 6.PIERS | 9. |
| Basement **0** | | |
| 1.1/4 BASE | 4.FULL BAS | 7. |
| 2.1/2 BASE | 5.CRAWL | 8. |
| 3.3/4 BASE | 6. | 9.NO BASEM |
| Bsmt Gar # Cars **0** | | |
| Wet Basement **0** | | |
| 1.DRY BASE | 4. | 7. |
| 2.DAMP BAS | 5. | 8. |
| 3.WET BASE | 6. | 9.NO BASEM |

| | | |
|---|---|---|
| SF Bsmt Living **0** | | |
| Fin Bsmt Grade **0 0** | | |
| DIRT FLOOR **0** | | |
| Heat Type **100%** **0** | | |
| 1.HWBB | 5.FWA | 9.NOT HEAT |
| 2.HWCI | 6.GRAVWA | 10. |
| 3.HP | 7.ELECTRIC | 11. |
| 4.STEAM | 8.FL/WALL | 12. |
| Cool Type **0%** **9 NONE** | | |
| 1.REFRIG A | 4.W&C AIR | 7. |
| 2.EVAPORAT | 5. | 8. |
| 3.HEAT PUM | 6. | 9.NONE |
| Kitchen Style **0** | | |
| 1.GOOD | 4.OBSOLETE | 7. |
| 2.TYPICAL | 5. | 8. |
| 3.OLD STYL | 6. | 9.NONE |
| Bath(s) Style **0** | | |
| 1.GOOD | 4.OBSOLETE | 7. |
| 2.TYPICAL | 5. | 8. |
| 3.OLD STYL | 6. | 9.NONE |
| # Rooms **0** | | |
| # Bedrooms **0** | | |
| # Full Baths **0** | | |
| # Half Baths **0** | | |
| # Addn Fixtures **0** | | |
| # Fireplaces **0** | | |

TRIO Software
A Division of Harris Computer Systems

| | | |
|---|---|---|
| Layout **0** | | |
| 1.TYPICAL | 4. | 7. |
| 2.INADEQUA | 5. | 8. |
| 3.POOR | 6. | 9. |
| Attic **0** | | |
| 1.1/4 FINI | 4.FULL FIN | 7. |
| 2.1/2 FINI | 5.FL / STA | 8. |
| 3.3/4 FINI | 6. | 9.NONE |
| Insulation **0** | | |
| 1.FULLY IN | 4.MINIMAL | 7. |
| 2.HEAVY | 5.UNKNOWN | 8. |
| 3.CAPPED O | 6. | 9.NONE |
| Unfinished % **0%** | | |
| Grade & Factor **0 0%** | | |
| 1.E GRADE | 4.B GRADE | 7. |
| 2.D GRADE | 5.A GRADE | 8. |
| 3.C GRADE | 6.AA GRADE | 9.SAME |
| SQFT (Footprint) **0** | | |
| Condition **0** | | |
| 1.POOR | 4.AVERAGE | 7.VERY GOO |
| 2.FAIR | 5.ABOVE AV | 8.EXCELLEN |
| 3.BELOW AV | 6.GOOD | 9.SAME |
| Phys. % Good **0%** | | |
| Funct. % Good **100%** | | |
| Functional Code **9 None** | | |
| 1.Incomp | 4.LongTerm | 7.Layout |
| 2.Overbuil | 5.Utility | 8.Other |
| 3.Delap | 6.Style | 9.None |
| Econ. % Good **100%** | | |
| Economic Code **NONE** | | |
| 0.None | 3.NO ELECT | 6. |
| 1.LOCATION | 4.GENERATC | 7. |
| 2.ENCROACH | 5. | 8.OTHER |
| Entrance Code **5 ESTIMATED** | | |
| 1.INTERIOR | 4.UNOCCUPI | 7. |
| 2.REFUSED | 5.ESTIMATE | 8. |
| 3.INFO ONL | 6. | 9. |
| Information Code **5 ESTIMATE** | | |
| 1.OWNER | 4.AGENT | 7. |
| 2.RELATIVE | 5.ESTIMATE | 8. |
| 3.TENANT | 6.OTHER | 9. |

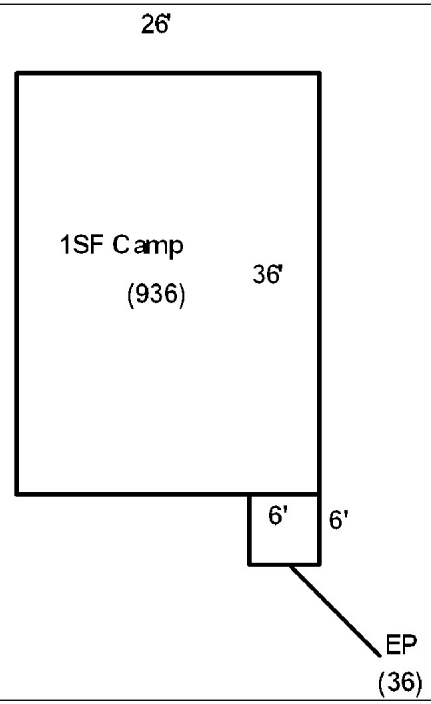

Date Inspected 7/11/2022

## Additions, Outbuildings & Improvements

| Type | Year | Units | Grade | Cond | Phys. | Funct. | Sound Value |
|---|---|---|---|---|---|---|---|
| 9 Camp / Cottage | 1970 | 936 | 3 105 | 4 | 0 % | 100 % | |
| 22 Enclosed Porch | 1970 | 36 | 3 100 | 4 | 0 % | 100 % | |
| | | | | | % | % | |
| | | | | | % | % | |
| | | | | | % | % | |
| | | | | | % | % | |
| | | | | | % | % | |
| | | | | | % | % | |
| | | | | | % | % | |
| | | | | | % | % | |

1.One Story Fram
2.Two Story Fram
3.Three Story Fr
4.1 & 1/2 Story
5.1 & 3/4 Story
6.2 & 1/2 Story
21.Open Porch
22.Enclosed Porch
23.Frame Garage
24.Frame Shed
25.1SF Bay Window
26.1SF Over Hang
27.Unfinished Bas
28.Unfinished Att
29.Finished Basem

Map Lot 003-014 Account 113 Location Card 1 Of 1 8/29/2023

Klei, Howard W
76 Turnpike Road
Willington CT 06279

B5140P192

## Property Data

Neighborhood **1 Rural**

Tree Growth Year **0**

X Coordinate

Y Coordinate

Zone/Land Use **1 Residential**

Secondary Zone

Topography **2 Rolling**

| | | |
|---|---|---|
| 1.Level | 4.Below Stre | 7.Steep |
| 2.Rolling | 5.Low | 8.Rough |
| 3.Above Stre | 6.Swampy | 9. |

Utilities **9 NoWater/NoSewer**

| | | |
|---|---|---|
| 1.Well+Septi | 4.Public Wat | 7.Cess Pool |
| 2.Drilled We | 5.Public Sew | 8.Holding Ta |
| 3.Septic Sys | 6.Dug Well | 9.NoW/NoSew |

Street **1 Paved**

| | | |
|---|---|---|
| 1.Paved | 4.Proposed | 7. |
| 2.Semi-Impro | 5.Private | 8. |
| 3.Gravel | 6. | 9.No Street |

LAND USE **0**

Building Use **0**

## Sale Data

Sale Date

Price

Sale Type

| | | |
|---|---|---|
| 1.Land | 4.Mobile | 7.C/I L&B |
| 2.L & B | 5.Other | 8. |
| 3.Building | 6.C/I Land | 9. |

Financing

| | | |
|---|---|---|
| 1.Convent | 4.Seller | 7. |
| 2.FHA/VA | 5.Private | 8. |
| 3.Assumed | 6.Cash | 9.Unknown |

Validity

| | | |
|---|---|---|
| 1.Valid | 4.Split | 7.Renovate |
| 2.Related | 5.Partial | 8.Other |
| 3.Distress | 6.Exempt | 9. |

Verified

| | | |
|---|---|---|
| 1.Buyer | 4.Agent | 7.Family |
| 2.Seller | 5.Pub Rec | 8.Other |
| 3.Lender | 6.MLS | 9. |

## Assessment Record

| Year | Land | Buildings | Exempt | Total |
|---|---|---|---|---|
| 2017 | 49,400 | 0 | 0 | 49,400 |
| 2018 | 48,800 | 0 | 0 | 48,800 |
| 2020 | 30,100 | 0 | 0 | 30,100 |
| 2021 | 27,300 | 0 | 0 | 27,300 |
| 2022 | 31,400 | 0 | 0 | 31,400 |
| 2023 | 32,100 | 0 | 0 | 32,100 |

## Land Data

| Front Foot | Type | Effective Frontage | Effective Depth | Influence Factor | Influence Code |
|---|---|---|---|---|---|
| 11.Regular Lot | | | | % | |
| 12.Delta Triangle | | | | % | |
| 13.Nabla Triangle | | | | % | |
| 14.Rear Land | | | | % | |
| 15.Class I Road | | | | % | |
| | | | | % | |
| | | | | % | |
| **Square Foot** | | **Square Feet** | | | |
| 16.Class II Road | | | | % | |
| 17.Municipal Rese | | | | % | |
| 18.Munic Sep Lago | | | | % | |
| 19.Gravel Pit | | | | % | |
| 20.Industrial Bas | | | | % | |
| | | | | % | |
| | | | | % | |
| **Fract. Acre** | | **Acreage/Sites** | | | |
| 21.Developed Pave | 38 | 151.40 | 100 | % | 0 |
| 22.Undev Paved (F | 27 | 1.90 | 100 | % | 0 |
| 23.Developed Grav | 37 | 14.90 | 100 | % | 0 |
| **Acres** | | | | % | |
| 24.Undev Gravel ( | | | | % | |
| 26.Rear Land | | | | % | |
| 27.Backlot | | | | % | |
| 29.Pavement | | | | % | |
| 30.Utility R O W | | | | | |
| 31.Tillable | | | | | |

**Total Acreage** 168.20

### Influence Codes

1.Vacancy
2.Unimproved
3.Topography
4.Size/Shape
5.Access
6.Restriction
7.Corner/Locatio
8.View/Environme
9.Fractional Sha
**Acres**
32.Pasture
33.Orchard
34.Softwood (FL)
35.Mixed Wood (FL
36.Hardwood (FL)
37.Softwood (TG)
38.Mixed Wood (TG
39.Hardwood (TG)
40.Wasteland
41.Open Space
42.Mobile Home Si
43.Condo Site
44.Lot Improvemen
45.Subdivision Lo
46.Heavy Ind Sit

Inspection Witnessed By:

X Date

| No./Date | Description | Date Insp. |
|---|---|---|
| | | |
| | | |
| | | |

Notes:

**Wade**

# Wade

Map Lot 003-014 | Account 113 | Location | Card 1 Of 1 | 8/29/2023

| | | |
|---|---|---|
| Building Style **0** | | |
| 1.CONVENTI | 5.GARRISON | 9.GAMBREL |
| 2.RANCH | 6.SALT BOX | 10.OTHER |
| 3.RAISED R | 7.CONTEMP | 11.SPLIT |
| 4.CAPE | 8.LOG | 12.NE |
| Dwelling Units **0** | | |
| Other Units **0** | | |
| Stories **0** | | |
| 1.ONE STOR | 4.1.5 STOR | 7.1.25 STO |
| 2.TWO STOR | 5.1.75 STO | 8. |
| 3.THREE ST | 6.2.5 STOR | 9. |
| Exterior Walls **0** | | |
| 1.WOOD | 5.STUCKO | 9.T-111 |
| 2.VIN/AL | 6.BRICK | 10.OTHER |
| 3.COMPOS. | 7.STONE | 11.LOG |
| 4.ASBESTOS | 8.CONCRETE | 12. |
| Roof Surface **0** | | |
| 1.ASPHALT | 4.COMPOSIT | 7. |
| 2.SLATE | 5.WOOD | 8. |
| 3.METAL | 6.OTHER | 9. |
| SF Masonry Trim **0** | | |
| **0** | | |
| **0** | | |
| Year Built **0** | | |
| Year Remodeled **0** | | |
| Foundation **0** | | |
| 1.CONCRETE | 4.WOOD | 7. |
| 2.CONCRETE | 5.SLAB | 8. |
| 3.BRICK/ST | 6.PIERS | 9. |
| Basement **0** | | |
| 1.1/4 BASE | 4.FULL BAS | 7. |
| 2.1/2 BASE | 5.CRAWL | 8. |
| 3.3/4 BASE | 6. | 9.NO BASEM |
| Bsmt Gar # Cars **0** | | |
| Wet Basement **0** | | |
| 1.DRY BASE | 4. | 7. |
| 2.DAMP BAS | 5. | 8. |
| 3.WET BASE | 6. | 9.NO BASEM |

| | | |
|---|---|---|
| SF Bsmt Living **0** | | |
| Fin Bsmt Grade **0 0** | | |
| DIRT FLOOR **0** | | |
| Heat Type **100%** **0** | | |
| 1.HWBB | 5.FWA | 9.NOT HEAT |
| 2.HWCI | 6.GRAVWA | 10. |
| 3.HP | 7.ELECTRIC | 11. |
| 4.STEAM | 8.FL/WALL | 12. |
| Cool Type **0%** **9 NONE** | | |
| 1.REFRIG A | 4.W&C AIR | 7. |
| 2.EVAPORAT | 5. | 8. |
| 3.HEAT PUM | 6. | 9.NONE |
| Kitchen Style **0** | | |
| 1.GOOD | 4.OBSOLETE | 7. |
| 2.TYPICAL | 5. | 8. |
| 3.OLD STYL | 6. | 9.NONE |
| Bath(s) Style **0** | | |
| 1.GOOD | 4.OBSOLETE | 7. |
| 2.TYPICAL | 5. | 8. |
| 3.OLD STYL | 6. | 9.NONE |
| # Rooms **0** | | |
| # Bedrooms **0** | | |
| # Full Baths **0** | | |
| # Half Baths **0** | | |
| # Addn Fixtures **0** | | |
| # Fireplaces **0** | | |

TRIO Software
A Division of Harris Computer Systems

| | | |
|---|---|---|
| Layout **0** | | |
| 1.TYPICAL | 4. | 7. |
| 2.INADEQUA | 5. | 8. |
| 3.POOR | 6. | 9. |
| Attic **0** | | |
| 1.1/4 FINI | 4.FULL FIN | 7. |
| 2.1/2 FINI | 5.FL / STA | 8. |
| 3.3/4 FINI | 6. | 9.NONE |
| Insulation **0** | | |
| 1.FULLY IN | 4.MINIMAL | 7. |
| 2.HEAVY | 5.UNKNOWN | 8. |
| 3.CAPPED O | 6. | 9.NONE |
| Unfinished % **0%** | | |
| Grade & Factor **0 0%** | | |
| 1.E GRADE | 4.B GRADE | 7. |
| 2.D GRADE | 5.A GRADE | 8. |
| 3.C GRADE | 6.AA GRADE | 9.SAME |
| SQFT (Footprint) **0** | | |
| Condition **0** | | |
| 1.POOR | 4.AVERAGE | 7.VERY GOO |
| 2.FAIR | 5.ABOVE AV | 8.EXCELLEN |
| 3.BELOW AV | 6.GOOD | 9.SAME |
| Phys. % Good **0%** | | |
| Funct. % Good **100%** | | |
| Functional Code **9 None** | | |
| 1.Incomp | 4.LongTerm | 7.Layout |
| 2.Overbuil | 5.Utility | 8.Other |
| 3.Delap | 6.Style | 9.None |
| Econ. % Good **100%** | | |
| Economic Code **NONE** | | |
| 0.None | 3.NO ELECT | 6. |
| 1.LOCATION | 4.GENERATC | 7. |
| 2.ENCROACH | 5. | 8.OTHER |
| Entrance Code **5 ESTIMATED** | | |
| 1.INTERIOR | 4.UNOCCUPI | 7. |
| 2.REFUSED | 5.ESTIMATE | 8. |
| 3.INFO ONL | 6. | 9. |
| Information Code **5 ESTIMATE** | | |
| 1.OWNER | 4.AGENT | 7. |
| 2.RELATIVE | 5.ESTIMATE | 8. |
| 3.TENANT | 6.OTHER | 9. |

Date Inspected 7/14/2022

## Additions, Outbuildings & Improvements

| Type | Year | Units | Grade | Cond | Phys. | Funct. | Sound Value |
|---|---|---|---|---|---|---|---|
| | | | | | % | % | |
| | | | | | % | % | |
| | | | | | % | % | |
| | | | | | % | % | |
| | | | | | % | % | |
| | | | | | % | % | |
| | | | | | % | % | |
| | | | | | % | % | |
| | | | | | % | % | |
| | | | | | % | % | |

1.One Story Fram
2.Two Story Fram
3.Three Story Fr
4.1 & 1/2 Story
5.1 & 3/4 Story
6.2 & 1/2 Story
21.Open Porch
22.Enclosed Porch
23.Frame Garage
24.Frame Shed
25.1SF Bay Window
26.1SF Over Hang
27.Unfinished Bas
28.Unfinished Att
29.Finished Basem

Map Lot 003-015 Account 134 Location 129 Haynes Road Card 1 Of 1 8/29/2023

MCCOY, MICHAEL E
129 HAYNES ROAD
WADE ME 04786

B3754P66 B6243P152

Previous Owner
McCoy, Brenda
129 Haynes Road

Wade ME 04786
Sale Date: 10/26/2021

Inspection Witnessed By:

X Date

| No./Date | Description | Date Insp. |
|---|---|---|
| | | |
| | | |
| | | |

Notes:

**Wade**

## Property Data

Neighborhood **1 Rural**

Tree Growth Year **0**

X Coordinate

Y Coordinate

Zone/Land Use **1 Residential**

Secondary Zone

Topography **2 Rolling**

| | | |
|---|---|---|
| 1.Level | 4.Below Stre | 7.Steep |
| 2.Rolling | 5.Low | 8.Rough |
| 3.Above Stre | 6.Swampy | 9. |

Utilities **1 Drilled Well / Septic**

| | | |
|---|---|---|
| 1.Well+Septi | 4.Public Wat | 7.Cess Pool |
| 2.Drilled We | 5.Public Sew | 8.Holding Ta |
| 3.Septic Sys | 6.Dug Well | 9.NoW/NoSew |

Street **1 Paved**

| | | |
|---|---|---|
| 1.Paved | 4.Proposed | 7. |
| 2.Semi-Impro | 5.Private | 8. |
| 3.Gravel | 6. | 9.No Street |

LAND USE **0**

Building Use **0**

## Sale Data

Sale Date **10/26/2021**

Price

Sale Type **2 Land & Building**

| | | |
|---|---|---|
| 1.Land | 4.Mobile | 7.C/I L&B |
| 2.L & B | 5.Other | 8. |
| 3.Building | 6.C/I Land | 9. |

Financing **9 Unknown**

| | | |
|---|---|---|
| 1.Convent | 4.Seller | 7. |
| 2.FHA/VA | 5.Private | 8. |
| 3.Assumed | 6.Cash | 9.Unknown |

Validity **8 Other Non Valid**

| | | |
|---|---|---|
| 1.Valid | 4.Split | 7.Renovate |
| 2.Related | 5.Partial | 8.Other |
| 3.Distress | 6.Exempt | 9. |

Verified **8 Other Source**

| | | |
|---|---|---|
| 1.Buyer | 4.Agent | 7.Family |
| 2.Seller | 5.Pub Rec | 8.Other |
| 3.Lender | 6.MLS | 9. |

## Assessment Record

| Year | Land | Buildings | Exempt | Total |
|---|---|---|---|---|
| 2017 | 12,700 | 122,600 | 20,000 | 115,300 |
| 2018 | 12,700 | 122,600 | 20,000 | 115,300 |
| 2020 | 12,700 | 122,600 | 25,000 | 110,300 |
| 2021 | 13,700 | 122,600 | 25,000 | 111,300 |
| 2022 | 21,700 | 117,400 | 0 | 139,100 |
| 2023 | 21,700 | 117,400 | 25,000 | 114,100 |

## Land Data

| Front Foot | Type | Effective Frontage | Effective Depth | Influence Factor | Influence Code |
|---|---|---|---|---|---|
| 11.Regular Lot | | | | % | |
| 12.Delta Triangle | | | | % | |
| 13.Nabla Triangle | | | | % | |
| 14.Rear Land | | | | % | |
| 15.Class I Road | | | | % | |
| | | | | % | |
| | | | | % | |
| **Square Foot** | | **Square Feet** | | | |
| 16.Class II Road | | | | % | |
| 17.Municipal Rese | | | | % | |
| 18.Munic Sep Lago | | | | % | |
| 19.Gravel Pit | | | | % | |
| 20.Industrial Bas | | | | % | |
| | | | | % | |
| | | | | % | |
| **Fract. Acre** | | **Acreage/Sites** | | | |
| 21.Developed Pave | 21 | 1.00 | 100 | % | 0 |
| 22.Undev Paved (F | 26 | 0.40 | 100 | % | 0 |
| 23.Developed Grav | | | | % | |
| **Acres** | | | | % | |
| 24.Undev Gravel ( | | | | % | |
| 26.Rear Land | | | | % | |
| 27.Backlot | | | | % | |
| 29.Pavement | | | | % | |
| 30.Utility R O W | | | | | |
| 31.Tillable | | | | | |

**Total Acreage** 1.40

### Influence Codes

1.Vacancy
2.Unimproved
3.Topography
4.Size/Shape
5.Access
6.Restriction
7.Corner/Locatio
8.View/Environme
9.Fractional Sha

**Acres**

32.Pasture
33.Orchard
34.Softwood (FL)
35.Mixed Wood (FL
36.Hardwood (FL)
37.Softwood (TG)
38.Mixed Wood (TG
39.Hardwood (TG)
40.Wasteland
41.Open Space
42.Mobile Home Si
43.Condo Site
44.Lot Improvemen
45.Subdivision Lo
46.Heavy Ind Sit

# Wade

Map Lot 003-015 | Account 134 | Location 129 Haynes Road | Card 1 Of 1 | 8/29/2023

| | | |
|---|---|---|
| Building Style | **2 RANCH** | |
| 1.CONVENTI | 5.GARRISON | 9.GAMBREL |
| 2.RANCH | 6.SALT BOX | 10.OTHER |
| 3.RAISED R | 7.CONTEMP | 11.SPLIT |
| 4.CAPE | 8.LOG | 12.NE |
| Dwelling Units | **1** | |
| Other Units | **0** | |
| Stories | **1 ONE STORY** | |
| 1.ONE STOR | 4.1.5 STOR | 7.1.25 STO |
| 2.TWO STOR | 5.1.75 STO | 8. |
| 3.THREE ST | 6.2.5 STOR | 9. |
| Exterior Walls | **2 VINYL/ALUMINUM** | |
| 1.WOOD | 5.STUCKO | 9.T-111 |
| 2.VIN/AL | 6.BRICK | 10.OTHER |
| 3.COMPOS. | 7.STONE | 11.LOG |
| 4.ASBESTOS | 8.CONCRETE | 12. |
| Roof Surface | **3 METAL** | |
| 1.ASPHALT | 4.COMPOSIT | 7. |
| 2.SLATE | 5.WOOD | 8. |
| 3.METAL | 6.OTHER | 9. |
| SF Masonry Trim | **0** | |
| | **0** | |
| | **0** | |
| Year Built | **2000** | |
| Year Remodeled | **0** | |
| Foundation | **1 CONCRETE** | |
| 1.CONCRETE | 4.WOOD | 7. |
| 2.CONCRETE | 5.SLAB | 8. |
| 3.BRICK/ST | 6.PIERS | 9. |
| Basement | **4 FULL BASEMENT** | |
| 1.1/4 BASE | 4.FULL BAS | 7. |
| 2.1/2 BASE | 5.CRAWL | 8. |
| 3.3/4 BASE | 6. | 9.NO BASEM |
| Bsmt Gar # Cars | **0** | |
| Wet Basement | **1 DRY BASEMENT** | |
| 1.DRY BASE | 4. | 7. |
| 2.DAMP BAS | 5. | 8. |
| 3.WET BASE | 6. | 9.NO BASEM |

| | | |
|---|---|---|
| SF Bsmt Living | **0** | |
| Fin Bsmt Grade | **0 0** | |
| DIRT FLOOR | **0** | |
| Heat Type | **100%** | **5 FORCED WARM AIR** |
| 1.HWBB | 5.FWA | 9.NOT HEAT |
| 2.HWCI | 6.GRAVWA | 10. |
| 3.HP | 7.ELECTRIC | 11. |
| 4.STEAM | 8.FL/WALL | 12. |
| Cool Type | **0%** | **9 NONE** |
| 1.REFRIG A | 4.W&C AIR | 7. |
| 2.EVAPORAT | 5. | 8. |
| 3.HEAT PUM | 6. | 9.NONE |
| Kitchen Style | **2 TYPICAL** | |
| 1.GOOD | 4.OBSOLETE | 7. |
| 2.TYPICAL | 5. | 8. |
| 3.OLD STYL | 6. | 9.NONE |
| Bath(s) Style | **2 TYPICAL** | |
| 1.GOOD | 4.OBSOLETE | 7. |
| 2.TYPICAL | 5. | 8. |
| 3.OLD STYL | 6. | 9.NONE |
| # Rooms | **6** | |
| # Bedrooms | **3** | |
| # Full Baths | **1** | |
| # Half Baths | **0** | |
| # Addn Fixtures | **0** | |
| # Fireplaces | **0** | |

TRIO Software
A Division of Harris Computer Systems

| | | |
|---|---|---|
| Layout | **1 TYPICAL** | |
| 1.TYPICAL | 4. | 7. |
| 2.INADEQUA | 5. | 8. |
| 3.POOR | 6. | 9. |
| Attic | **9 NONE** | |
| 1.1/4 FINI | 4.FULL FIN | 7. |
| 2.1/2 FINI | 5.FL / STA | 8. |
| 3.3/4 FINI | 6. | 9.NONE |
| Insulation | **1 FULLY INSULATED** | |
| 1.FULLY IN | 4.MINIMAL | 7. |
| 2.HEAVY | 5.UNKNOWN | 8. |
| 3.CAPPED O | 6. | 9.NONE |
| Unfinished % | **0%** | |
| Grade & Factor | **3 AVERAGE QUALITY** | |
| 1.E GRADE | 4.B GRADE | 7. |
| 2.D GRADE | 5.A GRADE | 8. |
| 3.C GRADE | 6.AA GRADE | 9.SAME |
| SQFT (Footprint) | **1104** | |
| Condition | **5 ABOVE AVERAGE** | |
| 1.POOR | 4.AVERAGE | 7.VERY GOO |
| 2.FAIR | 5.ABOVE AV | 8.EXCELLEN |
| 3.BELOW AV | 6.GOOD | 9.SAME |
| Phys. % Good | **0%** | |
| Funct. % Good | **100%** | |
| Functional Code | **9 None** | |
| 1.Incomp | 4.LongTerm | 7.Layout |
| 2.Overbuil | 5.Utility | 8.Other |
| 3.Delap | 6.Style | 9.None |
| Econ. % Good | **100%** | |
| Economic Code | **NONE** | |
| 0.None | 3.NO ELECT | 6. |
| 1.LOCATION | 4.GENERATC | 7. |
| 2.ENCROACH | 5. | 8.OTHER |
| Entrance Code | **2 REFUSED ENTRY** | |
| 1.INTERIOR | 4.UNOCCUPI | 7. |
| 2.REFUSED | 5.ESTIMATE | 8. |
| 3.INFO ONL | 6. | 9. |
| Information Code | **1 OWNER** | |
| 1.OWNER | 4.AGENT | 7. |
| 2.RELATIVE | 5.ESTIMATE | 8. |
| 3.TENANT | 6.OTHER | 9. |

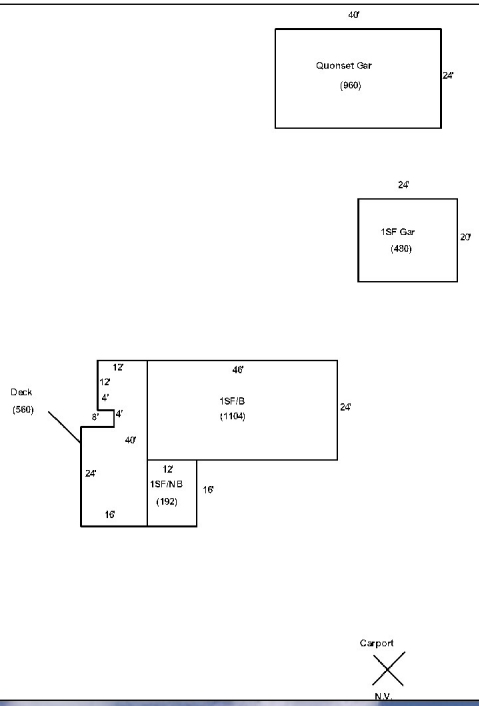


Date Inspected 7/11/2022

## Additions, Outbuildings & Improvements

| Type | Year | Units | Grade | Cond | Phys. | Funct. | Sound Value |
|---|---|---|---|---|---|---|---|
| 1 One Story Frame | 2000 | 192 | 9 100 | 9 | 0 % | 100 % | |
| 68 Deck | 2000 | 560 | 3 100 | 5 | 0 % | 100 % | |
| 23 Frame Garage | 2000 | 480 | 3 100 | 5 | 0 % | 100 % | |
| 96 Quonset Garage | 1990 | 960 | 3 100 | 5 | 0 % | 100 % | |
| | | | | | % | % | |
| | | | | | % | % | |
| | | | | | % | % | |
| | | | | | % | % | |
| | | | | | % | % | |
| | | | | | % | % | |

1.One Story Fram
2.Two Story Fram
3.Three Story Fr
4.1 & 1/2 Story
5.1 & 3/4 Story
6.2 & 1/2 Story
21.Open Porch
22.Enclosed Porch
23.Frame Garage
24.Frame Shed
25.1SF Bay Window
26.1SF Over Hang
27.Unfinished Bas
28.Unfinished Att
29.Finished Basem

Map Lot 003-016 Account 108 Location Haynes Rd Card 1 Of 1 8/29/2023

Klei, Jr., Herbert E.
76 Turnpike Road
Willington CT 06279

B1664P210

## Property Data

Neighborhood **1 Rural**

Tree Growth Year **0**

X Coordinate

Y Coordinate

Zone/Land Use **1 Residential**

Secondary Zone

Topography **2 Rolling**

1.Level 4.Below Stre 7.Steep
2.Rolling 5.Low 8.Rough
3.Above Stre 6.Swampy 9.

Utilities **9 NoWater/NoSewer**

1.Well+Septi 4.Public Wat 7.Cess Pool
2.Drilled We 5.Public Sew 8.Holding Ta
3.Septic Sys 6.Dug Well 9.NoW/NoSew

Street **1 Paved**

1.Paved 4.Proposed 7.
2.Semi-Impro 5.Private 8.
3.Gravel 6. 9.No Street

LAND USE **0**

Building Use **0**

## Sale Data

Sale Date

Price

Sale Type

1.Land 4.Mobile 7.C/I L&B
2.L & B 5.Other 8.
3.Building 6.C/I Land 9.

Financing

1.Convent 4.Seller 7.
2.FHA/VA 5.Private 8.
3.Assumed 6.Cash 9.Unknown

Validity

1.Valid 4.Split 7.Renovate
2.Related 5.Partial 8.Other
3.Distress 6.Exempt 9.

Verified

1.Buyer 4.Agent 7.Family
2.Seller 5.Pub Rec 8.Other
3.Lender 6.MLS 9.

## Assessment Record

| Year | Land | Buildings | Exempt | Total |
|---|---|---|---|---|
| 2017 | 2,100 | 0 | 0 | 2,100 |
| 2018 | 2,100 | 0 | 0 | 2,100 |
| 2020 | 1,800 | 0 | 0 | 1,800 |
| 2021 | 1,600 | 0 | 0 | 1,600 |
| 2022 | 1,700 | 0 | 0 | 1,700 |
| 2023 | 1,800 | 0 | 0 | 1,800 |

## Land Data

| Front Foot | Type | Effective Frontage | Effective Depth | Influence Factor | Influence Code |
|---|---|---|---|---|---|
| 11.Regular Lot | | | | % | |
| 12.Delta Triangle | | | | % | |
| 13.Nabla Triangle | | | | % | |
| 14.Rear Land | | | | % | |
| 15.Class I Road | | | | % | |
| | | | | % | |
| | | | | % | |
| **Square Foot** | | **Square Feet** | | | |
| 16.Class II Road | | | | % | |
| 17.Municipal Rese | | | | % | |
| 18.Munic Sep Lago | | | | % | |
| 19.Gravel Pit | | | | % | |
| 20.Industrial Bas | | | | % | |
| | | | | % | |
| | | | | % | |
| **Fract. Acre** | | **Acreage/Sites** | | | |
| 21.Developed Pave | 38 | 4.70 | 100 | % | 0 |
| 22.Undev Paved (F | 37 | 2.80 | 100 | % | 0 |
| 23.Developed Grav | 39 | 4.50 | 100 | % | 0 |
| **Acres** | | | | % | |
| 24.Undev Gravel ( | | | | % | |
| 26.Rear Land | | | | % | |
| 27.Backlot | | | | % | |
| 29.Pavement | | | | % | |
| 30.Utility R O W | | | | | |
| 31.Tillable | | | | | |

**Total Acreage** 12.00

### Influence Codes

1.Vacancy
2.Unimproved
3.Topography
4.Size/Shape
5.Access
6.Restriction
7.Corner/Locatio
8.View/Environme
9.Fractional Sha
**Acres**
32.Pasture
33.Orchard
34.Softwood (FL)
35.Mixed Wood (FL
36.Hardwood (FL)
37.Softwood (TG)
38.Mixed Wood (TG
39.Hardwood (TG)
40.Wasteland
41.Open Space
42.Mobile Home Si
43.Condo Site
44.Lot Improvemen
45.Subdivision Lo
46.Heavy Ind Sit

Inspection Witnessed By:

X Date

| No./Date | Description | Date Insp. |
|---|---|---|
| | | |
| | | |
| | | |

Notes:

**Wade**

# Wade

Map Lot 003-016 | Account 108 | Location Haynes Rd | Card 1 Of 1 | 8/29/2023

| | | |
|---|---|---|
| Building Style **0** | | |
| 1.CONVENTI | 5.GARRISON | 9.GAMBREL |
| 2.RANCH | 6.SALT BOX | 10.OTHER |
| 3.RAISED R | 7.CONTEMP | 11.SPLIT |
| 4.CAPE | 8.LOG | 12.NE |
| Dwelling Units **0** | | |
| Other Units **0** | | |
| Stories **0** | | |
| 1.ONE STOR | 4.1.5 STOR | 7.1.25 STO |
| 2.TWO STOR | 5.1.75 STO | 8. |
| 3.THREE ST | 6.2.5 STOR | 9. |
| Exterior Walls **0** | | |
| 1.WOOD | 5.STUCKO | 9.T-111 |
| 2.VIN/AL | 6.BRICK | 10.OTHER |
| 3.COMPOS. | 7.STONE | 11.LOG |
| 4.ASBESTOS | 8.CONCRETE | 12. |
| Roof Surface **0** | | |
| 1.ASPHALT | 4.COMPOSIT | 7. |
| 2.SLATE | 5.WOOD | 8. |
| 3.METAL | 6.OTHER | 9. |
| SF Masonry Trim **0** | | |
| **0** | | |
| **0** | | |
| Year Built **0** | | |
| Year Remodeled **0** | | |
| Foundation **0** | | |
| 1.CONCRETE | 4.WOOD | 7. |
| 2.CONCRETE | 5.SLAB | 8. |
| 3.BRICK/ST | 6.PIERS | 9. |
| Basement **0** | | |
| 1.1/4 BASE | 4.FULL BAS | 7. |
| 2.1/2 BASE | 5.CRAWL | 8. |
| 3.3/4 BASE | 6. | 9.NO BASEM |
| Bsmt Gar # Cars **0** | | |
| Wet Basement **0** | | |
| 1.DRY BASE | 4. | 7. |
| 2.DAMP BAS | 5. | 8. |
| 3.WET BASE | 6. | 9.NO BASEM |

| | | |
|---|---|---|
| SF Bsmt Living **0** | | |
| Fin Bsmt Grade **0 0** | | |
| DIRT FLOOR **0** | | |
| Heat Type **100%** **0** | | |
| 1.HWBB | 5.FWA | 9.NOT HEAT |
| 2.HWCI | 6.GRAVWA | 10. |
| 3.HP | 7.ELECTRIC | 11. |
| 4.STEAM | 8.FL/WALL | 12. |
| Cool Type **0%** **9 NONE** | | |
| 1.REFRIG A | 4.W&C AIR | 7. |
| 2.EVAPORAT | 5. | 8. |
| 3.HEAT PUM | 6. | 9.NONE |
| Kitchen Style **0** | | |
| 1.GOOD | 4.OBSOLETE | 7. |
| 2.TYPICAL | 5. | 8. |
| 3.OLD STYL | 6. | 9.NONE |
| Bath(s) Style **0** | | |
| 1.GOOD | 4.OBSOLETE | 7. |
| 2.TYPICAL | 5. | 8. |
| 3.OLD STYL | 6. | 9.NONE |
| # Rooms **0** | | |
| # Bedrooms **0** | | |
| # Full Baths **0** | | |
| # Half Baths **0** | | |
| # Addn Fixtures **0** | | |
| # Fireplaces **0** | | |

TRIO Software
A Division of Harris Computer Systems

| | | |
|---|---|---|
| Layout **0** | | |
| 1.TYPICAL | 4. | 7. |
| 2.INADEQUA | 5. | 8. |
| 3.POOR | 6. | 9. |
| Attic **0** | | |
| 1.1/4 FINI | 4.FULL FIN | 7. |
| 2.1/2 FINI | 5.FL / STA | 8. |
| 3.3/4 FINI | 6. | 9.NONE |
| Insulation **0** | | |
| 1.FULLY IN | 4.MINIMAL | 7. |
| 2.HEAVY | 5.UNKNOWN | 8. |
| 3.CAPPED O | 6. | 9.NONE |
| Unfinished % **0%** | | |
| Grade & Factor **0 0%** | | |
| 1.E GRADE | 4.B GRADE | 7. |
| 2.D GRADE | 5.A GRADE | 8. |
| 3.C GRADE | 6.AA GRADE | 9.SAME |
| SQFT (Footprint) **0** | | |
| Condition **0** | | |
| 1.POOR | 4.AVERAGE | 7.VERY GOO |
| 2.FAIR | 5.ABOVE AV | 8.EXCELLEN |
| 3.BELOW AV | 6.GOOD | 9.SAME |
| Phys. % Good **0%** | | |
| Funct. % Good **100%** | | |
| Functional Code **9 None** | | |
| 1.Incomp | 4.LongTerm | 7.Layout |
| 2.Overbuil | 5.Utility | 8.Other |
| 3.Delap | 6.Style | 9.None |
| Econ. % Good **100%** | | |
| Economic Code **NONE** | | |
| 0.None | 3.NO ELECT | 6. |
| 1.LOCATION | 4.GENERATC | 7. |
| 2.ENCROACH | 5. | 8.OTHER |
| Entrance Code **5 ESTIMATED** | | |
| 1.INTERIOR | 4.UNOCCUPI | 7. |
| 2.REFUSED | 5.ESTIMATE | 8. |
| 3.INFO ONL | 6. | 9. |
| Information Code **5 ESTIMATE** | | |
| 1.OWNER | 4.AGENT | 7. |
| 2.RELATIVE | 5.ESTIMATE | 8. |
| 3.TENANT | 6.OTHER | 9. |

Date Inspected 7/14/2022

## Additions, Outbuildings & Improvements

| Type | Year | Units | Grade | Cond | Phys. | Funct. | Sound Value |
|---|---|---|---|---|---|---|---|
| | | | | | % | % | |
| | | | | | % | % | |
| | | | | | % | % | |
| | | | | | % | % | |
| | | | | | % | % | |
| | | | | | % | % | |
| | | | | | % | % | |
| | | | | | % | % | |
| | | | | | % | % | |
| | | | | | % | % | |

1.One Story Fram
2.Two Story Fram
3.Three Story Fr
4.1 & 1/2 Story
5.1 & 3/4 Story
6.2 & 1/2 Story
21.Open Porch
22.Enclosed Porch
23.Frame Garage
24.Frame Shed
25.1SF Bay Window
26.1SF Over Hang
27.Unfinished Bas
28.Unfinished Att
29.Finished Basem

Map Lot 003-017 Account 35 Location 97 Haynes Rd Card 1 Of 1 8/29/2023

Condon, Herman G
Condon, Patricia A
64 Haynes Road
Castle Hill ME 04757

B6313P198

Previous Owner
Boynton, Joyce C
Boynton, Michael & Boynton Matthew G.
97 Haynes Rd
Wade ME 04786
Sale Date: 4/26/2022

Previous Owner
Boynton, Joyce
97 Haynes Rd

Wade ME 04786
Sale Date: 8/13/1999

Inspection Witnessed By:

X Date

| No./Date | Description | Date Insp. |
|---|---|---|
| | | |
| | | |
| | | |

Notes:
* Owner of Life Estate has passed
* Check 2023 for repair to footig on back of 1SF Pier on back of home.

* 1SF Pier (240) -10% functional due to footings needing repair.

**Wade**

## Property Data

Neighborhood **1 Rural**

Tree Growth Year **0**

X Coordinate

Y Coordinate

Zone/Land Use **1 Residential**

Secondary Zone

Topography **2 Rolling**

| | | |
|---|---|---|
| 1.Level | 4.Below Stre | 7.Steep |
| 2.Rolling | 5.Low | 8.Rough |
| 3.Above Stre | 6.Swampy | 9. |

Utilities **1 Drilled Well / Septic**

| | | |
|---|---|---|
| 1.Well+Septi | 4.Public Wat | 7.Cess Pool |
| 2.Drilled We | 5.Public Sew | 8.Holding Ta |
| 3.Septic Sys | 6.Dug Well | 9.NoW/NoSew |

Street **1 Paved**

| | | |
|---|---|---|
| 1.Paved | 4.Proposed | 7. |
| 2.Semi-Impro | 5.Private | 8. |
| 3.Gravel | 6. | 9.No Street |

LAND USE **0**

Building Use **0**

## Sale Data

Sale Date **4/26/2022**

Price **40,000**

Sale Type **1 Land Only**

| | | |
|---|---|---|
| 1.Land | 4.Mobile | 7.C/I L&B |
| 2.L & B | 5.Other | 8. |
| 3.Building | 6.C/I Land | 9. |

Financing **1 Conventional**

| | | |
|---|---|---|
| 1.Convent | 4.Seller | 7. |
| 2.FHA/VA | 5.Private | 8. |
| 3.Assumed | 6.Cash | 9.Unknown |

Validity **2 Related Parties**

| | | |
|---|---|---|
| 1.Valid | 4.Split | 7.Renovate |
| 2.Related | 5.Partial | 8.Other |
| 3.Distress | 6.Exempt | 9. |

Verified **1 Buyer**

| | | |
|---|---|---|
| 1.Buyer | 4.Agent | 7.Family |
| 2.Seller | 5.Pub Rec | 8.Other |
| 3.Lender | 6.MLS | 9. |

## Assessment Record

| Year | Land | Buildings | Exempt | Total |
|---|---|---|---|---|
| 2017 | 13,700 | 58,400 | 26,000 | 46,100 |
| 2018 | 13,700 | 58,400 | 26,000 | 46,100 |
| 2020 | 13,700 | 58,400 | 31,000 | 41,100 |
| 2021 | 14,700 | 58,400 | 31,000 | 42,100 |
| 2022 | 26,100 | 92,200 | 0 | 118,300 |
| 2023 | 26,100 | 92,200 | 0 | 118,300 |

## Land Data

| | Type | Effective Frontage | Effective Depth | Influence Factor | Influence Code |
|---|---|---|---|---|---|
| **Front Foot** | | | | | |
| 11.Regular Lot | | | | % | |
| 12.Delta Triangle | | | | % | |
| 13.Nabla Triangle | | | | % | |
| 14.Rear Land | | | | % | |
| 15.Class I Road | | | | % | |
| | | | | % | |
| | | | | % | |
| **Square Foot** | | **Square Feet** | | | |
| 16.Class II Road | 29 | 1,715 | | 75 % | 2 |
| 17.Municipal Rese | | | | % | |
| 18.Munic Sep Lago | | | | % | |
| 19.Gravel Pit | | | | % | |
| 20.Industrial Bas | | | | % | |
| | | | | % | |
| | | | | % | |
| **Fract. Acre** | | **Acreage/Sites** | | | |
| 21.Developed Pave | 21 | 1.00 | | 100 % | 0 |
| 22.Undev Paved (F | 26 | 2.50 | | 100 % | 0 |
| 23.Developed Grav | | | | % | |
| **Acres** | | | | % | |
| 24.Undev Gravel ( | | | | % | |
| 26.Rear Land | | | | % | |
| 27.Backlot | | | | % | |
| 29.Pavement | | | | % | |
| 30.Utility R O W | | | | % | |
| 31.Tillable | | | | % | |

**Total Acreage** 3.50

### Influence Codes

1.Vacancy
2.Unimproved
3.Topography
4.Size/Shape
5.Access
6.Restriction
7.Corner/Locatio
8.View/Environme
9.Fractional Sha
**Acres**
32.Pasture
33.Orchard
34.Softwood (FL)
35.Mixed Wood (FL
36.Hardwood (FL)
37.Softwood (TG)
38.Mixed Wood (TG
39.Hardwood (TG)
40.Wasteland
41.Open Space
42.Mobile Home Si
43.Condo Site
44.Lot Improvemen
45.Subdivision Lo
46.Heavy Ind Sit

# Wade

Map Lot 003-017 | Account 35 | Location 97 Haynes Rd | Card 1 Of 1 | 8/29/2023

| | | | |
|---|---|---|---|
| Building Style | **1 CONVENTIONAL** | | |
| 1.CONVENTI | 5.GARRISON | 9.GAMBREL | |
| 2.RANCH | 6.SALT BOX | 10.OTHER | |
| 3.RAISED R | 7.CONTEMP | 11.SPLIT | |
| 4.CAPE | 8.LOG | 12.NE | |
| Dwelling Units | **1** | | |
| Other Units | **0** | | |
| Stories | **4 ONE & 1/2 STORY** | | |
| 1.ONE STOR | 4.1.5 STOR | 7.1.25 STO | |
| 2.TWO STOR | 5.1.75 STO | 8. | |
| 3.THREE ST | 6.2.5 STOR | 9. | |
| Exterior Walls | **2 VINYL/ALUMINUM** | | |
| 1.WOOD | 5.STUCKO | 9.T-111 | |
| 2.VIN/AL | 6.BRICK | 10.OTHER | |
| 3.COMPOS. | 7.STONE | 11.LOG | |
| 4.ASBESTOS | 8.CONCRETE | 12. | |
| Roof Surface | **3 METAL** | | |
| 1.ASPHALT | 4.COMPOSIT | 7. | |
| 2.SLATE | 5.WOOD | 8. | |
| 3.METAL | 6.OTHER | 9. | |
| SF Masonry Trim | **0** | | |
| | **0** | | |
| | **0** | | |
| Year Built | **1900** | | |
| Year Remodeled | **0** | | |
| Foundation | **6 PIERS** | | |
| 1.CONCRETE | 4.WOOD | 7. | |
| 2.CONCRETE | 5.SLAB | 8. | |
| 3.BRICK/ST | 6.PIERS | 9. | |
| Basement | **5 CRAWL** | | |
| 1.1/4 BASE | 4.FULL BAS | 7. | |
| 2.1/2 BASE | 5.CRAWL | 8. | |
| 3.3/4 BASE | 6. | 9.NO BASEM | |
| Bsmt Gar # Cars | **0** | | |
| Wet Basement | **9 NO BASEMENT** | | |
| 1.DRY BASE | 4. | 7. | |
| 2.DAMP BAS | 5. | 8. | |
| 3.WET BASE | 6. | 9.NO BASEM | |

| | | | |
|---|---|---|---|
| SF Bsmt Living | **0** | | |
| Fin Bsmt Grade | **0 0** | | |
| DIRT FLOOR | **0** | | |
| Heat Type | **100%** | **5 FORCED WARM AIR** | |
| 1.HWBB | 5.FWA | 9.NOT HEAT | |
| 2.HWCI | 6.GRAVWA | 10. | |
| 3.HP | 7.ELECTRIC | 11. | |
| 4.STEAM | 8.FL/WALL | 12. | |
| Cool Type | **0%** | **9 NONE** | |
| 1.REFRIG A | 4.W&C AIR | 7. | |
| 2.EVAPORAT | 5. | 8. | |
| 3.HEAT PUM | 6. | 9.NONE | |
| Kitchen Style | **2 TYPICAL** | | |
| 1.GOOD | 4.OBSOLETE | 7. | |
| 2.TYPICAL | 5. | 8. | |
| 3.OLD STYL | 6. | 9.NONE | |
| Bath(s) Style | **2 TYPICAL** | | |
| 1.GOOD | 4.OBSOLETE | 7. | |
| 2.TYPICAL | 5. | 8. | |
| 3.OLD STYL | 6. | 9.NONE | |
| # Rooms | **8** | | |
| # Bedrooms | **5** | | |
| # Full Baths | **1** | | |
| # Half Baths | **0** | | |
| # Addn Fixtures | **0** | | |
| # Fireplaces | **0** | | |

TRIO Software
A Division of Harris Computer Systems

| | | | |
|---|---|---|---|
| Layout | **1 TYPICAL** | | |
| 1.TYPICAL | 4. | 7. | |
| 2.INADEQUA | 5. | 8. | |
| 3.POOR | 6. | 9. | |
| Attic | **9 NONE** | | |
| 1.1/4 FINI | 4.FULL FIN | 7. | |
| 2.1/2 FINI | 5.FL / STA | 8. | |
| 3.3/4 FINI | 6. | 9.NONE | |
| Insulation | **1 FULLY INSULATED** | | |
| 1.FULLY IN | 4.MINIMAL | 7. | |
| 2.HEAVY | 5.UNKNOWN | 8. | |
| 3.CAPPED O | 6. | 9.NONE | |
| Unfinished % | **0%** | | |
| Grade & Factor | **3 AVERAGE QUALITY** | | |
| 1.E GRADE | 4.B GRADE | 7. | |
| 2.D GRADE | 5.A GRADE | 8. | |
| 3.C GRADE | 6.AA GRADE | 9.SAME | |
| SQFT (Footprint) | **600** | | |
| Condition | **4 AVERAGE** | | |
| 1.POOR | 4.AVERAGE | 7.VERY GOO | |
| 2.FAIR | 5.ABOVE AV | 8.EXCELLEN | |
| 3.BELOW AV | 6.GOOD | 9.SAME | |
| Phys. % Good | **0%** | | |
| Funct. % Good | **100%** | | |
| Functional Code | **9 None** | | |
| 1.Incomp | 4.LongTerm | 7.Layout | |
| 2.Overbuil | 5.Utility | 8.Other | |
| 3.Delap | 6.Style | 9.None | |
| Econ. % Good | **100%** | | |
| Economic Code | **NONE** | | |
| 0.None | 3.NO ELECT | 6. | |
| 1.LOCATION | 4.GENERATC | 7. | |
| 2.ENCROACH | 5. | 8.OTHER | |
| Entrance Code | **3 INFORMATION ONLY** | | |
| 1.INTERIOR | 4.UNOCCUPI | 7. | |
| 2.REFUSED | 5.ESTIMATE | 8. | |
| 3.INFO ONL | 6. | 9. | |
| Information Code | **1 OWNER** | | |
| 1.OWNER | 4.AGENT | 7. | |
| 2.RELATIVE | 5.ESTIMATE | 8. | |
| 3.TENANT | 6.OTHER | 9. | |

Date Inspected 7/11/2022

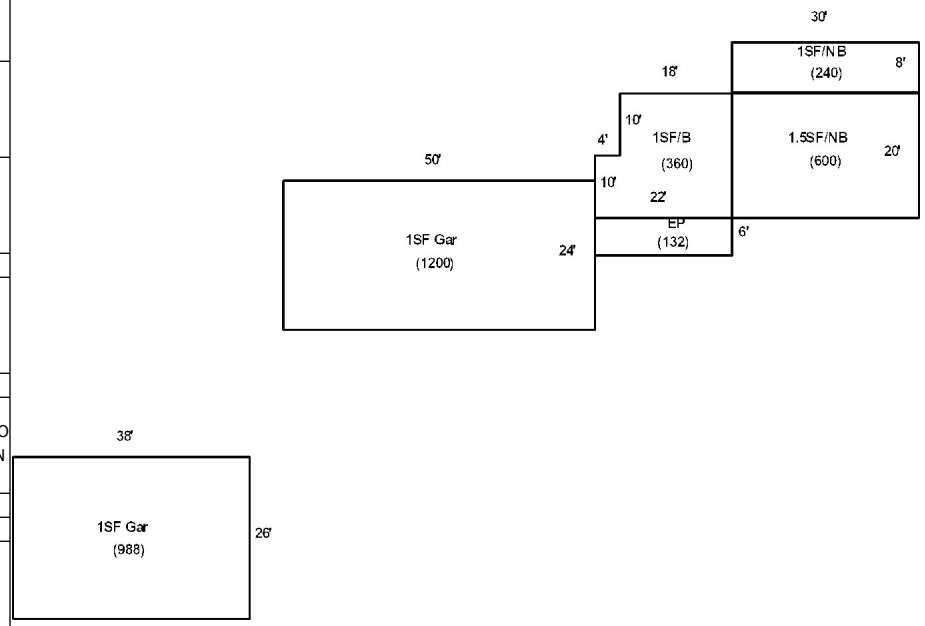

## Additions, Outbuildings & Improvements

| Type | Year | Units | Grade | Cond | Phys. | Funct. | Sound Value |
|---|---|---|---|---|---|---|---|
| 22 Enclosed Porch | 1960 | 132 | 3 100 | 4 | 0 % | 100 % | |
| 1 One Story Frame | 1960 | 240 | 3 100 | 4 | 0 % | 90 % | |
| 23 Frame Garage | 1960 | 1200 | 3 100 | 4 | 0 % | 100 % | |
| 23 Frame Garage | 2000 | 988 | 3 105 | 4 | 0 % | 100 % | |
| | | | | | % | % | |
| | | | | | % | % | |
| | | | | | % | % | |
| | | | | | % | % | |
| | | | | | % | % | |
| | | | | | % | % | |

1.One Story Fram
2.Two Story Fram
3.Three Story Fr
4.1 & 1/2 Story
5.1 & 3/4 Story
6.2 & 1/2 Story
21.Open Porch
22.Enclosed Porch
23.Frame Garage
24.Frame Shed
25.1SF Bay Window
26.1SF Over Hang
27.Unfinished Bas
28.Unfinished Att
29.Finished Basem

Map Lot 003-018 Account 215 Location 85 Haynes Rd Card 1 Of 1 8/29/2023

Wilcox, Sterling
85 Haynes Rd
Wade ME 04786

B1036P644

## Property Data

Neighborhood **1 Rural**

Tree Growth Year **0**

X Coordinate

Y Coordinate

Zone/Land Use **1 Residential**

Secondary Zone

Topography **2 Rolling**

| | | |
|---|---|---|
| 1.Level | 4.Below Stre | 7.Steep |
| 2.Rolling | 5.Low | 8.Rough |
| 3.Above Stre | 6.Swampy | 9. |

Utilities **1 Drilled Well / Septic**

| | | |
|---|---|---|
| 1.Well+Septi | 4.Public Wat | 7.Cess Pool |
| 2.Drilled We | 5.Public Sew | 8.Holding Ta |
| 3.Septic Sys | 6.Dug Well | 9.NoW/NoSew |

Street **1 Paved**

| | | |
|---|---|---|
| 1.Paved | 4.Proposed | 7. |
| 2.Semi-Impro | 5.Private | 8. |
| 3.Gravel | 6. | 9.No Street |

LAND USE **0**

Building Use **0**

## Sale Data

Sale Date

Price

Sale Type

| | | |
|---|---|---|
| 1.Land | 4.Mobile | 7.C/I L&B |
| 2.L & B | 5.Other | 8. |
| 3.Building | 6.C/I Land | 9. |

Financing

| | | |
|---|---|---|
| 1.Convent | 4.Seller | 7. |
| 2.FHA/VA | 5.Private | 8. |
| 3.Assumed | 6.Cash | 9.Unknown |

Validity

| | | |
|---|---|---|
| 1.Valid | 4.Split | 7.Renovate |
| 2.Related | 5.Partial | 8.Other |
| 3.Distress | 6.Exempt | 9. |

Verified

| | | |
|---|---|---|
| 1.Buyer | 4.Agent | 7.Family |
| 2.Seller | 5.Pub Rec | 8.Other |
| 3.Lender | 6.MLS | 9. |

## Assessment Record

| Year | Land | Buildings | Exempt | Total |
|---|---|---|---|---|
| 2017 | 33,500 | 34,400 | 26,000 | 41,900 |
| 2018 | 33,500 | 34,400 | 26,000 | 41,900 |
| 2020 | 33,500 | 34,400 | 31,000 | 36,900 |
| 2021 | 34,500 | 34,400 | 31,000 | 37,900 |
| 2022 | 47,100 | 56,200 | 31,000 | 72,300 |
| 2023 | 47,100 | 56,200 | 31,000 | 72,300 |

## Land Data

| Front Foot | Type | Effective Frontage | Effective Depth | Influence Factor | Influence Code |
|---|---|---|---|---|---|
| 11.Regular Lot | | | | % | |
| 12.Delta Triangle | | | | % | |
| 13.Nabla Triangle | | | | % | |
| 14.Rear Land | | | | % | |
| 15.Class I Road | | | | % | |
| | | | | % | |
| | | | | % | |
| **Square Foot** | | **Square Feet** | | | |
| 16.Class II Road | | | | % | |
| 17.Municipal Rese | | | | % | |
| 18.Munic Sep Lago | | | | % | |
| 19.Gravel Pit | | | | % | |
| 20.Industrial Bas | | | | % | |
| | | | | % | |
| | | | | % | |
| **Fract. Acre** | | **Acreage/Sites** | | | |
| 21.Developed Pave | 21 | 1.00 | 100 | % | 0 |
| 22.Undev Paved (F | 26 | 34.00 | 100 | % | 0 |
| 23.Developed Grav | 32 | 13.00 | 100 | % | 0 |
| **Acres** | | | | % | |
| 24.Undev Gravel ( | | | | % | |
| 26.Rear Land | | | | % | |
| 27.Backlot | | | | % | |
| 29.Pavement | | | | % | |
| 30.Utility R O W | | | | % | |
| 31.Tillable | | | | % | |

**Total Acreage** 48.00

### Influence Codes

1.Vacancy
2.Unimproved
3.Topography
4.Size/Shape
5.Access
6.Restriction
7.Corner/Locatio
8.View/Environme
9.Fractional Sha
**Acres**
32.Pasture
33.Orchard
34.Softwood (FL)
35.Mixed Wood (FL
36.Hardwood (FL)
37.Softwood (TG)
38.Mixed Wood (TG
39.Hardwood (TG)
40.Wasteland
41.Open Space
42.Mobile Home Si
43.Condo Site
44.Lot Improvemen
45.Subdivision Lo
46.Heavy Ind Sit

Inspection Witnessed By:

X Date

| No./Date | Description | Date Insp. |
|---|---|---|
| | | |
| | | |
| | | |

Notes:

* Dwelling (312), (336), and (416): -10% functional due to delap.

**Wade**

# Wade

Map Lot 003-018 | Account 215 | Location 85 Haynes Rd | Card 1 Of 1 | 8/29/2023

| | | |
|---|---|---|
| Building Style | **1 CONVENTIONAL** | |
| 1.CONVENTI | 5.GARRISON | 9.GAMBREL |
| 2.RANCH | 6.SALT BOX | 10.OTHER |
| 3.RAISED R | 7.CONTEMP | 11.SPLIT |
| 4.CAPE | 8.LOG | 12.NE |
| Dwelling Units | **1** | |
| Other Units | **0** | |
| Stories | **4 ONE & 1/2 STORY** | |
| 1.ONE STOR | 4.1.5 STOR | 7.1.25 STO |
| 2.TWO STOR | 5.1.75 STO | 8. |
| 3.THREE ST | 6.2.5 STOR | 9. |
| Exterior Walls | **4 ASBESTOS/ASPHALT** | |
| 1.WOOD | 5.STUCKO | 9.T-111 |
| 2.VIN/AL | 6.BRICK | 10.OTHER |
| 3.COMPOS. | 7.STONE | 11.LOG |
| 4.ASBESTOS | 8.CONCRETE | 12. |
| Roof Surface | **3 METAL** | |
| 1.ASPHALT | 4.COMPOSIT | 7. |
| 2.SLATE | 5.WOOD | 8. |
| 3.METAL | 6.OTHER | 9. |
| SF Masonry Trim | **0** | |
| | **0** | |
| | **0** | |
| Year Built | **1950** | |
| Year Remodeled | **0** | |
| Foundation | **1 CONCRETE** | |
| 1.CONCRETE | 4.WOOD | 7. |
| 2.CONCRETE | 5.SLAB | 8. |
| 3.BRICK/ST | 6.PIERS | 9. |
| Basement | **4 FULL BASEMENT** | |
| 1.1/4 BASE | 4.FULL BAS | 7. |
| 2.1/2 BASE | 5.CRAWL | 8. |
| 3.3/4 BASE | 6. | 9.NO BASEM |
| Bsmt Gar # Cars | **0** | |
| Wet Basement | **3 WET BASEMENT** | |
| 1.DRY BASE | 4. | 7. |
| 2.DAMP BAS | 5. | 8. |
| 3.WET BASE | 6. | 9.NO BASEM |

| | | |
|---|---|---|
| SF Bsmt Living | **0** | |
| Fin Bsmt Grade | **0 0** | |
| DIRT FLOOR | **0** | |
| Heat Type | **100%** | **5 FORCED WARM AIR** |
| 1.HWBB | 5.FWA | 9.NOT HEAT |
| 2.HWCI | 6.GRAVWA | 10. |
| 3.HP | 7.ELECTRIC | 11. |
| 4.STEAM | 8.FL/WALL | 12. |
| Cool Type | **0%** | **9 NONE** |
| 1.REFRIG A | 4.W&C AIR | 7. |
| 2.EVAPORAT | 5. | 8. |
| 3.HEAT PUM | 6. | 9.NONE |
| Kitchen Style | **2 TYPICAL** | |
| 1.GOOD | 4.OBSOLETE | 7. |
| 2.TYPICAL | 5. | 8. |
| 3.OLD STYL | 6. | 9.NONE |
| Bath(s) Style | **2 TYPICAL** | |
| 1.GOOD | 4.OBSOLETE | 7. |
| 2.TYPICAL | 5. | 8. |
| 3.OLD STYL | 6. | 9.NONE |
| # Rooms | **5** | |
| # Bedrooms | **2** | |
| # Full Baths | **1** | |
| # Half Baths | **0** | |
| # Addn Fixtures | **0** | |
| # Fireplaces | **0** | |

TRIO Software
A Division of Harris Computer Systems

| | | |
|---|---|---|
| Layout | **1 TYPICAL** | |
| 1.TYPICAL | 4. | 7. |
| 2.INADEQUA | 5. | 8. |
| 3.POOR | 6. | 9. |
| Attic | **9 NONE** | |
| 1.1/4 FINI | 4.FULL FIN | 7. |
| 2.1/2 FINI | 5.FL / STA | 8. |
| 3.3/4 FINI | 6. | 9.NONE |
| Insulation | **1 FULLY INSULATED** | |
| 1.FULLY IN | 4.MINIMAL | 7. |
| 2.HEAVY | 5.UNKNOWN | 8. |
| 3.CAPPED O | 6. | 9.NONE |
| Unfinished % | **0%** | |
| Grade & Factor | **3 AVERAGE QUALITY** | |
| 1.E GRADE | 4.B GRADE | 7. |
| 2.D GRADE | 5.A GRADE | 8. |
| 3.C GRADE | 6.AA GRADE | 9.SAME |
| SQFT (Footprint) | **416** | |
| Condition | **3 BELOW AVERAGE** | |
| 1.POOR | 4.AVERAGE | 7.VERY GOO |
| 2.FAIR | 5.ABOVE AV | 8.EXCELLEN |
| 3.BELOW AV | 6.GOOD | 9.SAME |
| Phys. % Good | **0%** | |
| Funct. % Good | **90%** | |
| Functional Code | **3 Dilapidation** | |
| 1.Incomp | 4.LongTerm | 7.Layout |
| 2.Overbuil | 5.Utility | 8.Other |
| 3.Delap | 6.Style | 9.None |
| Econ. % Good | **100%** | |
| Economic Code | **NONE** | |
| 0.None | 3.NO ELECT | 6. |
| 1.LOCATION | 4.GENERATC | 7. |
| 2.ENCROACH | 5. | 8.OTHER |
| Entrance Code | **5 ESTIMATED** | |
| 1.INTERIOR | 4.UNOCCUPI | 7. |
| 2.REFUSED | 5.ESTIMATE | 8. |
| 3.INFO ONL | 6. | 9. |
| Information Code | **5 ESTIMATE** | |
| 1.OWNER | 4.AGENT | 7. |
| 2.RELATIVE | 5.ESTIMATE | 8. |
| 3.TENANT | 6.OTHER | 9. |

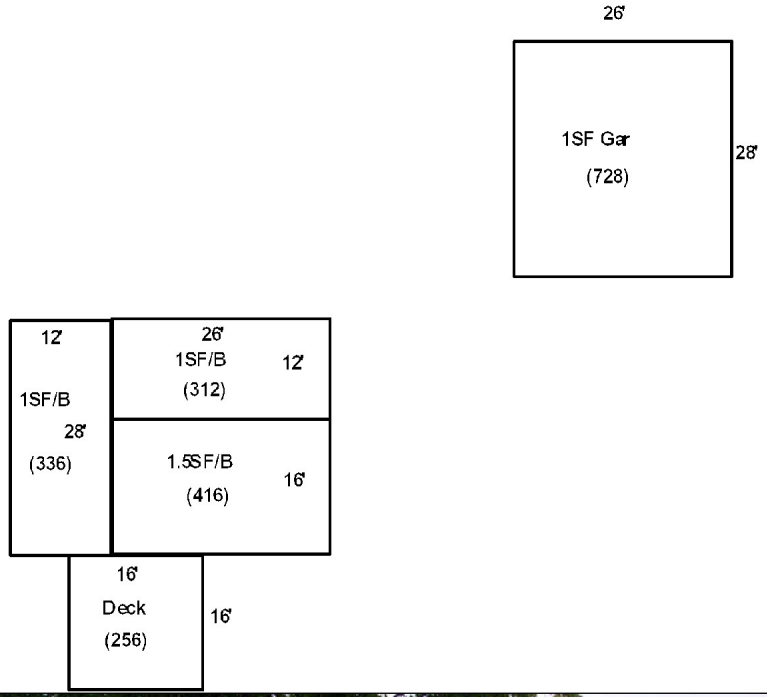


Date Inspected 7/11/2022

## Additions, Outbuildings & Improvements

| Type | Year | Units | Grade | Cond | Phys. | Funct. | Sound Value |
|---|---|---|---|---|---|---|---|
| 11 1 Story w/ | 1900 | 312 | 9 100 | 9 | 0 % | 90 % | |
| 11 1 Story w/ | 1900 | 336 | 9 100 | 9 | 0 % | 90 % | |
| 68 Deck | 1990 | 256 | 3 100 | 3 | 0 % | 100 % | |
| 23 Frame Garage | 1950 | 728 | 2 100 | 2 | 0 % | 100 % | |
| | | | | | % | % | |
| | | | | | % | % | |
| | | | | | % | % | |
| | | | | | % | % | |
| | | | | | % | % | |
| | | | | | % | % | |

1.One Story Fram
2.Two Story Fram
3.Three Story Fr
4.1 & 1/2 Story
5.1 & 3/4 Story
6.2 & 1/2 Story
21.Open Porch
22.Enclosed Porch
23.Frame Garage
24.Frame Shed
25.1SF Bay Window
26.1SF Over Hang
27.Unfinished Bas
28.Unfinished Att
29.Finished Basem

Map Lot 003-019 Account 79 Location 75 Haynes Rd Card 1 Of 1 8/29/2023

Hatt, Blake
Hatt, Sarah J
75 Haynes Rd
Wade ME 04786

B4836P66

## Property Data

Neighborhood **1 Rural**

Tree Growth Year **0**

X Coordinate

Y Coordinate

Zone/Land Use **1 Residential**

Secondary Zone

Topography **2 Rolling**

| | | |
|---|---|---|
| 1.Level | 4.Below Stre | 7.Steep |
| 2.Rolling | 5.Low | 8.Rough |
| 3.Above Stre | 6.Swampy | 9. |

Utilities **1 Drilled Well / Septic**

| | | |
|---|---|---|
| 1.Well+Septi | 4.Public Wat | 7.Cess Pool |
| 2.Drilled We | 5.Public Sew | 8.Holding Ta |
| 3.Septic Sys | 6.Dug Well | 9.NoW/NoSew |

Street **1 Paved**

| | | |
|---|---|---|
| 1.Paved | 4.Proposed | 7. |
| 2.Semi-Impro | 5.Private | 8. |
| 3.Gravel | 6. | 9.No Street |

LAND USE **0**

Building Use **0**

## Sale Data

Sale Date

Price

Sale Type

| | | |
|---|---|---|
| 1.Land | 4.Mobile | 7.C/I L&B |
| 2.L & B | 5.Other | 8. |
| 3.Building | 6.C/I Land | 9. |

Financing

| | | |
|---|---|---|
| 1.Convent | 4.Seller | 7. |
| 2.FHA/VA | 5.Private | 8. |
| 3.Assumed | 6.Cash | 9.Unknown |

Validity

| | | |
|---|---|---|
| 1.Valid | 4.Split | 7.Renovate |
| 2.Related | 5.Partial | 8.Other |
| 3.Distress | 6.Exempt | 9. |

Verified

| | | |
|---|---|---|
| 1.Buyer | 4.Agent | 7.Family |
| 2.Seller | 5.Pub Rec | 8.Other |
| 3.Lender | 6.MLS | 9. |

## Assessment Record

| Year | Land | Buildings | Exempt | Total |
|---|---|---|---|---|
| 2017 | 12,500 | 65,200 | 20,000 | 57,700 |
| 2018 | 12,500 | 65,200 | 20,000 | 57,700 |
| 2020 | 12,500 | 65,200 | 25,000 | 52,700 |
| 2021 | 13,500 | 65,200 | 25,000 | 53,700 |
| 2022 | 21,500 | 84,600 | 25,000 | 81,100 |
| 2023 | 21,500 | 84,600 | 25,000 | 81,100 |

## Land Data

| Front Foot | Type | Effective Frontage | Effective Depth | Influence Factor | Influence Code |
|---|---|---|---|---|---|
| 11.Regular Lot | | | | % | |
| 12.Delta Triangle | | | | % | |
| 13.Nabla Triangle | | | | % | |
| 14.Rear Land | | | | % | |
| 15.Class I Road | | | | % | |
| | | | | % | |
| | | | | % | |
| **Square Foot** | | **Square Feet** | | | |
| 16.Class II Road | | | | % | |
| 17.Municipal Rese | | | | % | |
| 18.Munic Sep Lago | | | | % | |
| 19.Gravel Pit | | | | % | |
| 20.Industrial Bas | | | | % | |
| | | | | % | |
| | | | | % | |
| **Fract. Acre** | | **Acreage/Sites** | | | |
| 21.Developed Pave | 21 | | 1.00 | 100 % | 0 |
| 22.Undev Paved (F | | | | % | |
| 23.Developed Grav | | | | % | |
| **Acres** | | | | % | |
| 24.Undev Gravel ( | | | | % | |
| 26.Rear Land | | | | % | |
| 27.Backlot | | | | % | |
| 29.Pavement | | | | % | |
| 30.Utility R O W | | | | % | |
| 31.Tillable | | | | % | |

**Total Acreage** 1.00

### Influence Codes

1.Vacancy
2.Unimproved
3.Topography
4.Size/Shape
5.Access
6.Restriction
7.Corner/Locatio
8.View/Environme
9.Fractional Sha
**Acres**
32.Pasture
33.Orchard
34.Softwood (FL)
35.Mixed Wood (FL
36.Hardwood (FL)
37.Softwood (TG)
38.Mixed Wood (TG
39.Hardwood (TG)
40.Wasteland
41.Open Space
42.Mobile Home Si
43.Condo Site
44.Lot Improvemen
45.Subdivision Lo
46.Heavy Ind Sit

Inspection Witnessed By:

X Date

| No./Date | Description | Date Insp. |
|---|---|---|
| | | |
| | | |
| | | |

Notes:

**Wade**

# Wade

Map Lot 003-019 | Account 79 | Location 75 Haynes Rd | Card 1 Of 1 | 8/29/2023

| | | |
|---|---|---|
| Building Style | **3 RAISED RANCH** | |
| 1.CONVENTI | 5.GARRISON | 9.GAMBREL |
| 2.RANCH | 6.SALT BOX | 10.OTHER |
| 3.RAISED R | 7.CONTEMP | 11.SPLIT |
| 4.CAPE | 8.LOG | 12.NE |
| Dwelling Units | **1** | |
| Other Units | **0** | |
| Stories | **1 ONE STORY** | |
| 1.ONE STOR | 4.1.5 STOR | 7.1.25 STO |
| 2.TWO STOR | 5.1.75 STO | 8. |
| 3.THREE ST | 6.2.5 STOR | 9. |
| Exterior Walls | **2 VINYL/ALUMINUM** | |
| 1.WOOD | 5.STUCKO | 9.T-111 |
| 2.VIN/AL | 6.BRICK | 10.OTHER |
| 3.COMPOS. | 7.STONE | 11.LOG |
| 4.ASBESTOS | 8.CONCRETE | 12. |
| Roof Surface | **1 ASPHALT SHINGLES** | |
| 1.ASPHALT | 4.COMPOSIT | 7. |
| 2.SLATE | 5.WOOD | 8. |
| 3.METAL | 6.OTHER | 9. |
| SF Masonry Trim | **0** | |
| | **0** | |
| | **0** | |
| Year Built | **2000** | |
| Year Remodeled | **0** | |
| Foundation | **1 CONCRETE** | |
| 1.CONCRETE | 4.WOOD | 7. |
| 2.CONCRETE | 5.SLAB | 8. |
| 3.BRICK/ST | 6.PIERS | 9. |
| Basement | **4 FULL BASEMENT** | |
| 1.1/4 BASE | 4.FULL BAS | 7. |
| 2.1/2 BASE | 5.CRAWL | 8. |
| 3.3/4 BASE | 6. | 9.NO BASEM |
| Bsmt Gar # Cars | **0** | |
| Wet Basement | **1 DRY BASEMENT** | |
| 1.DRY BASE | 4. | 7. |
| 2.DAMP BAS | 5. | 8. |
| 3.WET BASE | 6. | 9.NO BASEM |

| | | |
|---|---|---|
| SF Bsmt Living | **462** | |
| Fin Bsmt Grade | **3 100** | |
| DIRT FLOOR | **0** | |
| Heat Type | **100%** | **1 HOT WATER BB** |
| 1.HWBB | 5.FWA | 9.NOT HEAT |
| 2.HWCI | 6.GRAVWA | 10. |
| 3.HP | 7.ELECTRIC | 11. |
| 4.STEAM | 8.FL/WALL | 12. |
| Cool Type | **0%** | **9 NONE** |
| 1.REFRIG A | 4.W&C AIR | 7. |
| 2.EVAPORAT | 5. | 8. |
| 3.HEAT PUM | 6. | 9.NONE |
| Kitchen Style | **2 TYPICAL** | |
| 1.GOOD | 4.OBSOLETE | 7. |
| 2.TYPICAL | 5. | 8. |
| 3.OLD STYL | 6. | 9.NONE |
| Bath(s) Style | **2 TYPICAL** | |
| 1.GOOD | 4.OBSOLETE | 7. |
| 2.TYPICAL | 5. | 8. |
| 3.OLD STYL | 6. | 9.NONE |
| # Rooms | **5** | |
| # Bedrooms | **3** | |
| # Full Baths | **1** | |
| # Half Baths | **0** | |
| # Addn Fixtures | **0** | |
| # Fireplaces | **0** | |

TRIO Software
A Division of Harris Computer Systems

| | | |
|---|---|---|
| Layout | **1 TYPICAL** | |
| 1.TYPICAL | 4. | 7. |
| 2.INADEQUA | 5. | 8. |
| 3.POOR | 6. | 9. |
| Attic | **9 NONE** | |
| 1.1/4 FINI | 4.FULL FIN | 7. |
| 2.1/2 FINI | 5.FL / STA | 8. |
| 3.3/4 FINI | 6. | 9.NONE |
| Insulation | **1 FULLY INSULATED** | |
| 1.FULLY IN | 4.MINIMAL | 7. |
| 2.HEAVY | 5.UNKNOWN | 8. |
| 3.CAPPED O | 6. | 9.NONE |
| Unfinished % | **0%** | |
| Grade & Factor | **3 AVERAGE QUALITY** | |
| 1.E GRADE | 4.B GRADE | 7. |
| 2.D GRADE | 5.A GRADE | 8. |
| 3.C GRADE | 6.AA GRADE | 9.SAME |
| SQFT (Footprint) | **924** | |
| Condition | **4 AVERAGE** | |
| 1.POOR | 4.AVERAGE | 7.VERY GOO |
| 2.FAIR | 5.ABOVE AV | 8.EXCELLEN |
| 3.BELOW AV | 6.GOOD | 9.SAME |
| Phys. % Good | **0%** | |
| Funct. % Good | **100%** | |
| Functional Code | **9 None** | |
| 1.Incomp | 4.LongTerm | 7.Layout |
| 2.Overbuil | 5.Utility | 8.Other |
| 3.Delap | 6.Style | 9.None |
| Econ. % Good | **100%** | |
| Economic Code | **NONE** | |
| 0.None | 3.NO ELECT | 6. |
| 1.LOCATION | 4.GENERATC | 7. |
| 2.ENCROACH | 5. | 8.OTHER |
| Entrance Code | **3 INFORMATION ONLY** | |
| 1.INTERIOR | 4.UNOCCUPI | 7. |
| 2.REFUSED | 5.ESTIMATE | 8. |
| 3.INFO ONL | 6. | 9. |
| Information Code | **1 OWNER** | |
| 1.OWNER | 4.AGENT | 7. |
| 2.RELATIVE | 5.ESTIMATE | 8. |
| 3.TENANT | 6.OTHER | 9. |

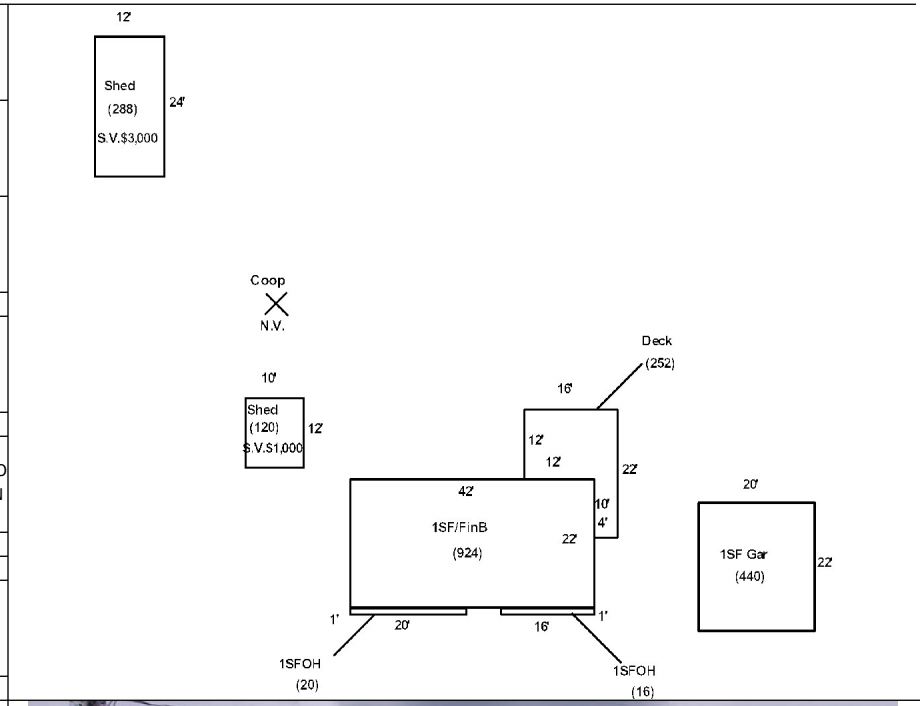

Date Inspected 7/11/2022

## Additions, Outbuildings & Improvements

| Type | Year | Units | Grade | Cond | Phys. | Funct. | Sound Value |
|---|---|---|---|---|---|---|---|
| 26 1SF Over Hang | 2000 | 40 | 9 100 | 9 | 0 % | 100 % | |
| 26 1SF Over Hang | 2000 | 32 | 9 100 | 9 | 0 % | 100 % | |
| 68 Deck | 2010 | 252 | 3 100 | 4 | 0 % | 100 % | |
| 23 Frame Garage | 2010 | 440 | 3 100 | 4 | 0 % | 100 % | |
| 24 Frame Shed | 2000 | | | | % | % | 1,000 |
| 24 Frame Shed | 2021 | | | | % | % | 3,000 |
| | | | | | % | % | |
| | | | | | % | % | |
| | | | | | % | % | |
| | | | | | % | % | |

1.One Story Fram
2.Two Story Fram
3.Three Story Fr
4.1 & 1/2 Story
5.1 & 3/4 Story
6.2 & 1/2 Story
21.Open Porch
22.Enclosed Porch
23.Frame Garage
24.Frame Shed
25.1SF Bay Window
26.1SF Over Hang
27.Unfinished Bas
28.Unfinished Att
29.Finished Basem

Map Lot 003-020 | Account 24 | Location 5 Haynes Rd | Card 1 Of 1 | 8/29/2023

Chandler Family LLC
1634 State Road
Mapleton ME 04757

B3482P1

Inspection Witnessed By:

X Date

| No./Date | Description | Date Insp. |
|---|---|---|
| | | |
| | | |
| | | |

Notes:

**Wade**

## Property Data

Neighborhood **1 Rural**

Tree Growth Year **0**

X Coordinate

Y Coordinate

Zone/Land Use **1 Residential**

Secondary Zone

Topography **2 Rolling**

1.Level 4.Below Stre 7.Steep
2.Rolling 5.Low 8.Rough
3.Above Stre 6.Swampy 9.

Utilities **1 Drilled Well / Septic**

1.Well+Septi 4.Public Wat 7.Cess Pool
2.Drilled We 5.Public Sew 8.Holding Ta
3.Septic Sys 6.Dug Well 9.NoW/NoSew

Street

1.Paved 4.Proposed 7.
2.Semi-Impro 5.Private 8.
3.Gravel 6. 9.No Street

LAND USE **0**

Building Use **0**

## Sale Data

Sale Date

Price

Sale Type

1.Land 4.Mobile 7.C/I L&B
2.L & B 5.Other 8.
3.Building 6.C/I Land 9.

Financing

1.Convent 4.Seller 7.
2.FHA/VA 5.Private 8.
3.Assumed 6.Cash 9.Unknown

Validity

1.Valid 4.Split 7.Renovate
2.Related 5.Partial 8.Other
3.Distress 6.Exempt 9.

Verified

1.Buyer 4.Agent 7.Family
2.Seller 5.Pub Rec 8.Other
3.Lender 6.MLS 9.

## Assessment Record

| Year | Land | Buildings | Exempt | Total |
|---|---|---|---|---|
| 2017 | 112,800 | 0 | 0 | 112,800 |
| 2018 | 112,800 | 0 | 0 | 112,800 |
| 2020 | 112,800 | 0 | 0 | 112,800 |
| 2021 | 124,300 | 0 | 0 | 124,300 |
| 2022 | 148,300 | 0 | 0 | 148,300 |
| 2023 | 148,300 | 0 | 0 | 148,300 |

## Land Data

**Front Foot**

11.Regular Lot
12.Delta Triangle
13.Nabla Triangle
14.Rear Land
15.Class I Road

**Square Foot**

16.Class II Road
17.Municipal Rese
18.Munic Sep Lago
19.Gravel Pit
20.Industrial Bas

**Fract. Acre**

21.Developed Pave
22.Undev Paved (F
23.Developed Grav
**Acres**
24.Undev Gravel (
26.Rear Land
27.Backlot
29.Pavement
30.Utility R O W
31.Tillable

| Type | Effective Frontage | Effective Depth | Influence Factor | Influence Code |
|---|---|---|---|---|
| | | | % | |
| | | | % | |
| | | | % | |
| | | | % | |
| | | | % | |
| | | | % | |
| | | | % | |
| | **Square Feet** | | | |
| | | | % | |
| | | | % | |
| | | | % | |
| | | | % | |
| | | | % | |
| | | | % | |
| | | | % | |
| | **Acreage/Sites** | | | |
| 21 | 1.00 | 100 | % | 0 |
| 26 | 78.00 | 100 | % | 0 |
| 31 | 84.00 | 100 | % | 0 |
| 40 | 4.00 | 100 | % | 0 |
| | | | % | |
| | | | % | |
| | | | % | |

**Total Acreage** 167.00

**Influence Codes**

1.Vacancy
2.Unimproved
3.Topography
4.Size/Shape
5.Access
6.Restriction
7.Corner/Locatio
8.View/Environme
9.Fractional Sha
**Acres**
32.Pasture
33.Orchard
34.Softwood (FL)
35.Mixed Wood (FL
36.Hardwood (FL)
37.Softwood (TG)
38.Mixed Wood (TG
39.Hardwood (TG)
40.Wasteland
41.Open Space
42.Mobile Home Si
43.Condo Site
44.Lot Improvemen
45.Subdivision Lo
46.Heavy Ind Sit

**Wade**

Map Lot 003-020 | Account 24 | Location 5 Haynes Rd | Card 1 Of 1 | 8/29/2023

| | | |
|---|---|---|
| Building Style **0** | | |
| 1.CONVENTI | 5.GARRISON | 9.GAMBREL |
| 2.RANCH | 6.SALT BOX | 10.OTHER |
| 3.RAISED R | 7.CONTEMP | 11.SPLIT |
| 4.CAPE | 8.LOG | 12.NE |
| Dwelling Units **0** | | |
| Other Units **0** | | |
| Stories **0** | | |
| 1.ONE STOR | 4.1.5 STOR | 7.1.25 STO |
| 2.TWO STOR | 5.1.75 STO | 8. |
| 3.THREE ST | 6.2.5 STOR | 9. |
| Exterior Walls **0** | | |
| 1.WOOD | 5.STUCKO | 9.T-111 |
| 2.VIN/AL | 6.BRICK | 10.OTHER |
| 3.COMPOS. | 7.STONE | 11.LOG |
| 4.ASBESTOS | 8.CONCRETE | 12. |
| Roof Surface **0** | | |
| 1.ASPHALT | 4.COMPOSIT | 7. |
| 2.SLATE | 5.WOOD | 8. |
| 3.METAL | 6.OTHER | 9. |
| SF Masonry Trim **0** | | |
| **0** | | |
| **0** | | |
| Year Built **0** | | |
| Year Remodeled **0** | | |
| Foundation **0** | | |
| 1.CONCRETE | 4.WOOD | 7. |
| 2.CONCRETE | 5.SLAB | 8. |
| 3.BRICK/ST | 6.PIERS | 9. |
| Basement **0** | | |
| 1.1/4 BASE | 4.FULL BAS | 7. |
| 2.1/2 BASE | 5.CRAWL | 8. |
| 3.3/4 BASE | 6. | 9.NO BASEM |
| Bsmt Gar # Cars **0** | | |
| Wet Basement **0** | | |
| 1.DRY BASE | 4. | 7. |
| 2.DAMP BAS | 5. | 8. |
| 3.WET BASE | 6. | 9.NO BASEM |

| | | |
|---|---|---|
| SF Bsmt Living **0** | | |
| Fin Bsmt Grade **0 0** | | |
| DIRT FLOOR **0** | | |
| Heat Type **100%** **0** | | |
| 1.HWBB | 5.FWA | 9.NOT HEAT |
| 2.HWCI | 6.GRAVWA | 10. |
| 3.HP | 7.ELECTRIC | 11. |
| 4.STEAM | 8.FL/WALL | 12. |
| Cool Type **0%** **9 NONE** | | |
| 1.REFRIG A | 4.W&C AIR | 7. |
| 2.EVAPORAT | 5. | 8. |
| 3.HEAT PUM | 6. | 9.NONE |
| Kitchen Style **0** | | |
| 1.GOOD | 4.OBSOLETE | 7. |
| 2.TYPICAL | 5. | 8. |
| 3.OLD STYL | 6. | 9.NONE |
| Bath(s) Style **0** | | |
| 1.GOOD | 4.OBSOLETE | 7. |
| 2.TYPICAL | 5. | 8. |
| 3.OLD STYL | 6. | 9.NONE |
| # Rooms **0** | | |
| # Bedrooms **0** | | |
| # Full Baths **0** | | |
| # Half Baths **0** | | |
| # Addn Fixtures **0** | | |
| # Fireplaces **0** | | |

TRIO Software
A Division of Harris Computer Systems

| | | |
|---|---|---|
| Layout **0** | | |
| 1.TYPICAL | 4. | 7. |
| 2.INADEQUA | 5. | 8. |
| 3.POOR | 6. | 9. |
| Attic **0** | | |
| 1.1/4 FINI | 4.FULL FIN | 7. |
| 2.1/2 FINI | 5.FL / STA | 8. |
| 3.3/4 FINI | 6. | 9.NONE |
| Insulation **0** | | |
| 1.FULLY IN | 4.MINIMAL | 7. |
| 2.HEAVY | 5.UNKNOWN | 8. |
| 3.CAPPED O | 6. | 9.NONE |
| Unfinished % **0%** | | |
| Grade & Factor **0 0%** | | |
| 1.E GRADE | 4.B GRADE | 7. |
| 2.D GRADE | 5.A GRADE | 8. |
| 3.C GRADE | 6.AA GRADE | 9.SAME |
| SQFT (Footprint) **0** | | |
| Condition **0** | | |
| 1.POOR | 4.AVERAGE | 7.VERY GOO |
| 2.FAIR | 5.ABOVE AV | 8.EXCELLEN |
| 3.BELOW AV | 6.GOOD | 9.SAME |
| Phys. % Good **0%** | | |
| Funct. % Good **100%** | | |
| Functional Code **9 None** | | |
| 1.Incomp | 4.LongTerm | 7.Layout |
| 2.Overbuil | 5.Utility | 8.Other |
| 3.Delap | 6.Style | 9.None |
| Econ. % Good **100%** | | |
| Economic Code **NONE** | | |
| 0.None | 3.NO ELECT | 6. |
| 1.LOCATION | 4.GENERATC | 7. |
| 2.ENCROACH | 5. | 8.OTHER |
| Entrance Code **0** | | |
| 1.INTERIOR | 4.UNOCCUPI | 7. |
| 2.REFUSED | 5.ESTIMATE | 8. |
| 3.INFO ONL | 6. | 9. |
| Information Code **0** | | |
| 1.OWNER | 4.AGENT | 7. |
| 2.RELATIVE | 5.ESTIMATE | 8. |
| 3.TENANT | 6.OTHER | 9. |

Date Inspected

**Additions, Outbuildings & Improvements**

| Type | Year | Units | Grade | Cond | Phys. | Funct. | Sound Value |
|---|---|---|---|---|---|---|---|
| | | | | | % | % | |
| | | | | | % | % | |
| | | | | | % | % | |
| | | | | | % | % | |
| | | | | | % | % | |
| | | | | | % | % | |
| | | | | | % | % | |
| | | | | | % | % | |
| | | | | | % | % | |
| | | | | | % | % | |

1.One Story Fram
2.Two Story Fram
3.Three Story Fr
4.1 & 1/2 Story
5.1 & 3/4 Story
6.2 & 1/2 Story
21.Open Porch
22.Enclosed Porch
23.Frame Garage
24.Frame Shed
25.1SF Bay Window
26.1SF Over Hang
27.Unfinished Bas
28.Unfinished Att
29.Finished Basem