Map Lot 010-001 Account 37 Location 36 STORY STREET Card 1 Of 1 12/09/2022

BRAGG, LUCKY L
BRAGG, TAMMY C
36 STORY ST
WASHBURN ME 04786

B1606P196

Inspection Witnessed By:

X Date

No./Date	Description	Date Insp.

Notes:

*Grandaughter was home at time of visit, mentioned there should be a second account for the garage & shed. Lot 2 has been assessed as Land Only, left the garage and shed on first account with dwelling.

Washburn

Property Data

Neighborhood **1 Neighborhood One**

Tree Growth Year **0**

1ST MORTGAGE **0**

2ND MORTGAGE **0**

Zone/Land Use **1 Residential**

Secondary Zone

Topography **1 Level**

1.Level	4.Below St	7.LevelBog
2.Rolling	5.Low	8.
3.Above St	6.Swampy	9.

Utilities **2 Public Water** **3 Public Sewer**

1.Public	4.Dr Well	7.Cesspool
2.Water	5.Dug Well	8.
3.Sewer	6.Septic	9.None

Street **1 Paved**

1.Paved	4.Proposed	7.
2.Semi Imp	5.R/O/W	8.
3.Gravel	6.	9.None

TG PLAN YEAR **0**

Tif District # **0**

Sale Data

Sale Date **6/21/1982**

Price

Sale Type **2 Land & Buildings**

1.Land	4.Mobile	7.C/I L&B
2.L & B	5.Other	8.
3.Building	6.C/I Land	9.

Financing

1.Convent	4.Seller	7.
2.FHA/VA	5.Private	8.
3.Assumed	6.Cash	9.Unknown

Validity **3 Distressed Sale**

1.Valid	4.Split	7.Renovate
2.Related	5.Partial	8.Other
3.Distress	6.Exempt	9.

Verified **5 Public Record**

1.Buyer	4.Agent	7.Family
2.Seller	5.Pub Rec	8.Other
3.Lender	6.MLS	9.

Assessment Record

Year	Land	Buildings	Exempt	Total
2009	3,100	28,100	9,000	22,200
2012	3,100	28,100	8,800	22,400
2013	4,100	28,100	8,800	23,400
2015	4,100	28,100	9,000	23,200
2018	4,100	28,100	18,400	13,800
2019	10,800	65,400	20,000	56,200
2020	10,800	65,200	25,000	51,000
2021	10,800	65,400	25,000	51,200
2022	10,800	68,600	25,000	54,400

Land Data

Front Foot	Type	Effective Frontage	Effective Depth	Influence Factor	Influence Code
11.Regular Lot				%	
12.Delta Triangle				%	
13.Nabla Triangle				%	
14.Rear Land				%	
15.Class I Road				%	
				%	
				%	
Square Foot		**Square Feet**			
16.Class II Road	29	2,000		75 %	0
17.Municipal Rese				%	
18.Munic Sep Lago				%	
19.Gravel Pit				%	
20.Industrial Bas				%	
				%	
				%	
Fract. Acre		**Acreage/Sites**			
21.Developed Pave	21	0.18		100 %	0
22.Undev Paved (F				%	
23.Developed Grav				%	
Acres				%	
24.Undev Gravel (				%	
25.Comm Base Pave				%	
26.Comm Base Grav				%	
27.Backlot				%	
28.Rear Land				%	
29.Pavement				%	

Total Acreage 0.18

Influence Codes

1.Unimproved
2.Excess Frtg
3.Topography
4.Size/Shape
5.Access
6.Restriction
7.Open Space
8.View/Environ
9.Fract Share
Acres
30.Utility R O W
31.Tillable
32.Pasture
33.Orchard
34.Softwood F&O
35.Mixed Wood F&O
36.Hardwood F&O
37.Softwood TG
38.Mixed Wood TG
39.Hardwood TG
40.Wasteland
41.Open Space
42.Mobile Home Si
43.Condo Site
44.Lot Improvemen
45.Subdivision Lo
46.Heavy Ind Sit

Washburn

Map Lot 010-001 | Account 37 | Location 36 STORY STREET | Card 1 Of 1 | 12/09/2022

Building Style	**4 Cape Cod**	
1.Conv.	5.Garrison	9.Gambrel
2.Ranch	6.Salt Box	10.Other
3.R Ranch	7.Contemp	11.Split
4.Cape	8.Log	12.
Dwelling Units	**1**	
Other Units	**0**	
Stories	**4 One & 1/2 Story**	
1.1	4.1.5	7.
2.2	5.1.75	8.
3.3	6.2.5	9.
Exterior Walls	**2 Vinyl/Aluminum**	
1.Wood	5.Stucco	9.T-111
2.Vin/Al	6.Brick	10.Other
3.Compos.	7.Stone	11.
4.Asbestos	8.Concrete	12.
Roof Surface	**1 Asphalt Shingles**	
1.Asphalt	4.Composit	7.
2.Slate	5.Wood	8.
3.Metal	6.Other	9.
SF Masonry Trim	**0**	
OPEN-3-CUSTOM	**0**	
OPEN-4-CUSTOM	**0**	
Year Built	**1920**	
Year Remodeled	**0**	
Foundation	**2 Concrete Block**	
1.Concrete	4.Wood	7.
2.C Block	5.Slab	8.
3.Br/Stone	6.Piers	9.
Basement	**3 3/4 Basement**	
1.1/4 Bmt	4.Full Bmt	7.
2.1/2 Bmt	5.None	8.
3.3/4 Bmt	6.	9.None
Bsmt Gar # Cars	**0**	
Wet Basement	**2 Damp Basement**	
1.Dry	4.	7.
2.Damp	5.	8.
3.Wet	6.	9.

SF Bsmt Living	**0**	
Fin Bsmt Grade	**0 0**	
OPEN 5 OPTIONAL	**0**	
Heat Type	**100%**	**5 Forced Warm Air**
1.HWBB	5.FWA	9.No Heat
2.HWCI	6.GravWA	10.
3.H Pump	7.Electric	11.
4.Steam	8.Fl/Wall	12.
Cool Type	**0%**	**9 None**
1.Refrig	4.W&C Air	7.
2.Evapor	5.	8.
3.H Pump	6.	9.None
Kitchen Style	**2 Typical**	
1.Modern	4.Obsolete	7.
2.Typical	5.	8.
3.Old Type	6.	9.None
Bath(s) Style	**2 Typical Bath(s)**	
1.Modern	4.Obsolete	7.
2.Typical	5.	8.
3.Old Type	6.	9.None
# Rooms	**6**	
# Bedrooms	**3**	
# Full Baths	**1**	
# Half Baths	**0**	
# Addn Fixtures	**0**	
# Fireplaces	**0**	

TRIO Software
A Division of Harris Computer Systems

Layout	**1 Typical**	
1.Typical	4.	7.
2.Inadeq	5.	8.
3.Poor	6.	9.
Attic	**9 None**	
1.1/4 Fin	4.Full Fin	7.
2.1/2 Fin	5.Fl/Stair	8.
3.3/4 Fin	6.	9.None
Insulation	**1 Full**	
1.Full	4.Minimal	7.
2.Heavy	5.Partial	8.
3.Capped	6.	9.None
Unfinished %	**0%**	
Grade & Factor	**2 Fair 110%**	
1.E Grade	4.B Grade	7.
2.D Grade	5.A Grade	8.SC Grade
3.C Grade	6.AA Grade	9.Same
SQFT (Footprint)	**270**	
Condition	**5 Above Average**	
1.Poor	4.Avg	7.V G
2.Fair	5.Avg+	8.Exc
3.Avg-	6.Good	9.Same
Phys. % Good	**0%**	
Funct. % Good	**95%**	
Functional Code	**5 Basement**	
1.Incomp	4.Delap	7.No Power
2.O-Built	5.Bsmt	8.LongTerm
3.Damage	6.Common	9.None
Econ. % Good	**100%**	
Economic Code	**None**	
0.None	3.No Power	7.
1.Location	4.Generate	8.
2.Encroach	9.None	9.
Entrance Code	**1 Interior Inspect**	
1.Interior	4.Vacant	7.
2.Refusal	5.Estimate	8.
3.Informed	6.Reviewed	9.
Information Code	**2 Relative**	
1.Owner	4.Agent	7.
2.Relative	5.Estimate	8.
3.Tenant	6.Other	9.

Date Inspected 10/01/2018

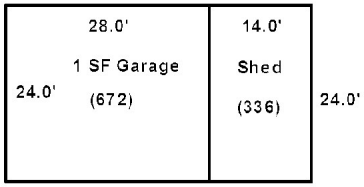

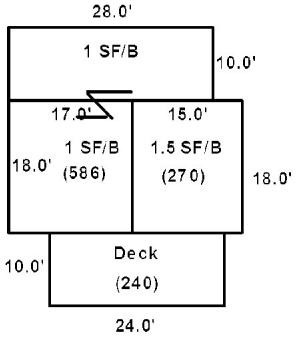

Road

Additions, Outbuildings & Improvements

Type	Year	Units	Grade	Cond	Phys.	Funct.	Sound Value
68 Wood Deck	1990	240	3 100	4	0 %	100 %	
20 1 Story/Bsmt	1950	586	9 100	9	0 %	100 %	
23 Frame Garage	2000	672	3 95	4	0 %	100 %	
24 Frame Shed	2010	336	2 110	4	0 %	80 %	
					%	%	
					%	%	
					%	%	
					%	%	
					%	%	
					%	%	

1.One Story Fram
2.Two Story Fram
3.Three Story Fr
4.1 & 1/2 Story
5.1 & 3/4 Story
6.2 & 1/2 Story
21.Open Frame Por
22.Encl Frame Por
23.Frame Garage
24.Frame Shed
25.Frame Bay Wind
26.1SFr Overhang
27.Unfin Basement
28.Unfinished Att
29.Finished Attic

Map Lot 010-002 Account 121 Location Story Street Card 1 Of 1 12/09/2022

Bragg, Tammy
36 STORY STREET
WASHBURN ME 04786

B3940P261

Property Data

Neighborhood **1 Neighborhood One**

Tree Growth Year **0**

1ST MORTGAGE **0**

2ND MORTGAGE **0**

Zone/Land Use **1 Residential**

Secondary Zone

Topography **1 Level**

1.Level	4.Below St	7.LevelBog
2.Rolling	5.Low	8.
3.Above St	6.Swampy	9.

Utilities

1.Public	4.Dr Well	7.Cesspool
2.Water	5.Dug Well	8.
3.Sewer	6.Septic	9.None

Street **1 Paved**

1.Paved	4.Proposed	7.
2.Semi Imp	5.R/O/W	8.
3.Gravel	6.	9.None

TG PLAN YEAR **0**

Tif District # **0**

Sale Data

Sale Date

Price

Sale Type

1.Land	4.Mobile	7.C/I L&B
2.L & B	5.Other	8.
3.Building	6.C/I Land	9.

Financing

1.Convent	4.Seller	7.
2.FHA/VA	5.Private	8.
3.Assumed	6.Cash	9.Unknown

Validity

1.Valid	4.Split	7.Renovate
2.Related	5.Partial	8.Other
3.Distress	6.Exempt	9.

Verified

1.Buyer	4.Agent	7.Family
2.Seller	5.Pub Rec	8.Other
3.Lender	6.MLS	9.

Assessment Record

Year	Land	Buildings	Exempt	Total
2009	1,500	0	0	1,500
2012	1,500	0	0	1,500
2013	2,000	0	0	2,000
2015	2,000	0	0	2,000
2018	2,000	0	0	2,000
2019	1,400	0	0	1,400
2020	1,400	0	0	1,400
2021	1,400	0	0	1,400
2022	1,400	0	0	1,400

Land Data

Front Foot	Type	Effective Frontage	Effective Depth	Influence Factor	Influence Code
11.Regular Lot				%	
12.Delta Triangle				%	
13.Nabla Triangle				%	
14.Rear Land				%	
15.Class I Road				%	
				%	
				%	
Square Foot		**Square Feet**			
16.Class II Road				%	
17.Municipal Rese				%	
18.Munic Sep Lago				%	
19.Gravel Pit				%	
20.Industrial Bas				%	
				%	
				%	
Fract. Acre		**Acreage/Sites**			
21.Developed Pave	22	0.09		50 %	6
22.Undev Paved (F				%	
23.Developed Grav				%	
Acres				%	
24.Undev Gravel (				%	
25.Comm Base Pave				%	
26.Comm Base Grav				%	
27.Backlot				%	
28.Rear Land				%	
29.Pavement				%	

Total Acreage 0.09

Influence Codes

1.Unimproved
2.Excess Frtg
3.Topography
4.Size/Shape
5.Access
6.Restriction
7.Open Space
8.View/Environ
9.Fract Share
Acres
30.Utility R O W
31.Tillable
32.Pasture
33.Orchard
34.Softwood F&O
35.Mixed Wood F&O
36.Hardwood F&O
37.Softwood TG
38.Mixed Wood TG
39.Hardwood TG
40.Wasteland
41.Open Space
42.Mobile Home Si
43.Condo Site
44.Lot Improvemen
45.Subdivision Lo
46.Heavy Ind Sit

Inspection Witnessed By:

X Date

No./Date	Description	Date Insp.

Notes:
*Unbuildable -50%

Washburn

Washburn

Map Lot 010-002 | Account 121 | Location Story Street | Card 1 Of 1 | 12/09/2022

Building Style **0**		
1.Conv.	5.Garrison	9.Gambrel
2.Ranch	6.Salt Box	10.Other
3.R Ranch	7.Contemp	11.Split
4.Cape	8.Log	12.
Dwelling Units **0**		
Other Units **0**		
Stories **0**		
1.1	4.1.5	7.
2.2	5.1.75	8.
3.3	6.2.5	9.
Exterior Walls **0**		
1.Wood	5.Stucco	9.T-111
2.Vin/Al	6.Brick	10.Other
3.Compos.	7.Stone	11.
4.Asbestos	8.Concrete	12.
Roof Surface **0**		
1.Asphalt	4.Composit	7.
2.Slate	5.Wood	8.
3.Metal	6.Other	9.
SF Masonry Trim **0**		
OPEN-3-CUSTOM **0**		
OPEN-4-CUSTOM **0**		
Year Built **0**		
Year Remodeled **0**		
Foundation **0**		
1.Concrete	4.Wood	7.
2.C Block	5.Slab	8.
3.Br/Stone	6.Piers	9.
Basement **0**		
1.1/4 Bmt	4.Full Bmt	7.
2.1/2 Bmt	5.None	8.
3.3/4 Bmt	6.	9.None
Bsmt Gar # Cars **0**		
Wet Basement **0**		
1.Dry	4.	7.
2.Damp	5.	8.
3.Wet	6.	9.

SF Bsmt Living **0**		
Fin Bsmt Grade **0 0**		
OPEN 5 OPTIONAL **0**		
Heat Type **100%** **0**		
1.HWBB	5.FWA	9.No Heat
2.HWCI	6.GravWA	10.
3.H Pump	7.Electric	11.
4.Steam	8.Fl/Wall	12.
Cool Type **0%** **9 None**		
1.Refrig	4.W&C Air	7.
2.Evapor	5.	8.
3.H Pump	6.	9.None
Kitchen Style **0**		
1.Modern	4.Obsolete	7.
2.Typical	5.	8.
3.Old Type	6.	9.None
Bath(s) Style **0**		
1.Modern	4.Obsolete	7.
2.Typical	5.	8.
3.Old Type	6.	9.None
# Rooms **0**		
# Bedrooms **0**		
# Full Baths **0**		
# Half Baths **0**		
# Addn Fixtures **0**		
# Fireplaces **0**		

TRIO Software
A Division of Harris Computer Systems

Layout **0**		
1.Typical	4.	7.
2.Inadeq	5.	8.
3.Poor	6.	9.
Attic **0**		
1.1/4 Fin	4.Full Fin	7.
2.1/2 Fin	5.Fl/Stair	8.
3.3/4 Fin	6.	9.None
Insulation **0**		
1.Full	4.Minimal	7.
2.Heavy	5.Partial	8.
3.Capped	6.	9.None
Unfinished % **0%**		
Grade & Factor **0 0%**		
1.E Grade	4.B Grade	7.
2.D Grade	5.A Grade	8.SC Grade
3.C Grade	6.AA Grade	9.Same
SQFT (Footprint) **0**		
Condition **0**		
1.Poor	4.Avg	7.V G
2.Fair	5.Avg+	8.Exc
3.Avg-	6.Good	9.Same
Phys. % Good **0%**		
Funct. % Good **100%**		
Functional Code **9 None**		
1.Incomp	4.Delap	7.No Power
2.O-Built	5.Bsmt	8.LongTerm
3.Damage	6.Common	9.None
Econ. % Good **100%**		
Economic Code **None**		
0.None	3.No Power	7.
1.Location	4.Generate	8.
2.Encroach	9.None	9.
Entrance Code **0**		
1.Interior	4.Vacant	7.
2.Refusal	5.Estimate	8.
3.Informed	6.Reviewed	9.
Information Code **0**		
1.Owner	4.Agent	7.
2.Relative	5.Estimate	8.
3.Tenant	6.Other	9.

Date Inspected

Additions, Outbuildings & Improvements

Type	Year	Units	Grade	Cond	Phys.	Funct.	Sound Value
					%	%	
					%	%	
					%	%	
					%	%	
					%	%	
					%	%	
					%	%	
					%	%	
					%	%	
					%	%	

1.One Story Fram
2.Two Story Fram
3.Three Story Fr
4.1 & 1/2 Story
5.1 & 3/4 Story
6.2 & 1/2 Story
21.Open Frame Por
22.Encl Frame Por
23.Frame Garage
24.Frame Shed
25.Frame Bay Wind
26.1SFr Overhang
27.Unfin Basement
28.Unfinished Att
29.Finished Attic

Map Lot 010-002A | Account 98 | Location 40 STORY STREET | Card 1 Of 1 | 12/09/2022

HENTHORN, JAMES E
HENTHORN, EVA A
478 CROSS ROAD
WASHBURN ME 04786

B6117P65

Previous Owner
PLANTE, KATHI L
HUNT, CRAIG S/CONRAD S
327 Kennebeck River Road
Embden ME 04958
Sale Date: 1/01/2021

Inspection Witnessed By:

X Date

No./Date	Description	Date Insp.

Notes:
*-15% for MH size, -15% for 3/4 attached garage during reval.

Washburn

Property Data

Neighborhood	**1 Neighborhood One**
Tree Growth Year	**0**
1ST MORTGAGE	**0**
2ND MORTGAGE	**0**
Zone/Land Use	**1 Residential**
Secondary Zone	
Topography	**1 Level**

1.Level	4.Below St	7.LevelBog
2.Rolling	5.Low	8.
3.Above St	6.Swampy	9.

Utilities **2 Public Water** **3 Public Sewer**

1.Public	4.Dr Well	7.Cesspool
2.Water	5.Dug Well	8.
3.Sewer	6.Septic	9.None

Street **1 Paved**

1.Paved	4.Proposed	7.
2.Semi Imp	5.R/O/W	8.
3.Gravel	6.	9.None

TG PLAN YEAR	**0**
Tif District #	**0**

Sale Data

Sale Date	**1/01/2021**
Price	**35,800**
Sale Type	**4 Mobile Home**

1.Land	4.Mobile	7.C/I L&B
2.L & B	5.Other	8.
3.Building	6.C/I Land	9.

Financing **9 Unknown**

1.Convent	4.Seller	7.
2.FHA/VA	5.Private	8.
3.Assumed	6.Cash	9.Unknown

Validity **1 Arms Length Sale**

1.Valid	4.Split	7.Renovate
2.Related	5.Partial	8.Other
3.Distress	6.Exempt	9.

Verified **5 Public Record**

1.Buyer	4.Agent	7.Family
2.Seller	5.Pub Rec	8.Other
3.Lender	6.MLS	9.

Assessment Record

Year	Land	Buildings	Exempt	Total
2009	3,200	12,300	9,000	6,500
2012	3,200	12,300	8,800	6,700
2013	4,100	12,300	8,800	7,600
2015	4,100	12,300	9,000	7,400
2018	4,100	12,300	0	16,400
2019	7,000	29,000	0	36,000
2020	7,000	28,800	0	35,800
2021	7,000	29,000	0	36,000
2022	7,000	30,500	0	37,500

Land Data

Front Foot	Type	Effective Frontage	Effective Depth	Influence Factor	Influence Code
11.Regular Lot				%	
12.Delta Triangle				%	
13.Nabla Triangle				%	
14.Rear Land				%	
15.Class I Road				%	
				%	
				%	
Square Foot		**Square Feet**			
16.Class II Road				%	
17.Municipal Rese				%	
18.Munic Sep Lago				%	
19.Gravel Pit				%	
20.Industrial Bas				%	
				%	
				%	
Fract. Acre		**Acreage/Sites**			
21.Developed Pave	21		0.18	100 %	0
22.Undev Paved (F				%	
23.Developed Grav				%	
Acres				%	
24.Undev Gravel (				%	
25.Comm Base Pave				%	
26.Comm Base Grav				%	
27.Backlot				%	
28.Rear Land				%	
29.Pavement				%	

Total Acreage 0.18

Influence Codes

1.Unimproved
2.Excess Frtg
3.Topography
4.Size/Shape
5.Access
6.Restriction
7.Open Space
8.View/Environ
9.Fract Share
Acres
30.Utility R O W
31.Tillable
32.Pasture
33.Orchard
34.Softwood F&O
35.Mixed Wood F&O
36.Hardwood F&O
37.Softwood TG
38.Mixed Wood TG
39.Hardwood TG
40.Wasteland
41.Open Space
42.Mobile Home Si
43.Condo Site
44.Lot Improvemen
45.Subdivision Lo
46.Heavy Ind Sit

Washburn

Map Lot 010-002A | Account 98 | Location 40 STORY STREET | Card 1 Of 1 | 12/09/2022

Building Style		
1.Conv.	5.Garrison	9.Gambrel
2.Ranch	6.Salt Box	10.Other
3.R Ranch	7.Contemp	11.Split
4.Cape	8.Log	12.

Dwelling Units
Other Units

Stories		
1.1	4.1.5	7.
2.2	5.1.75	8.
3.3	6.2.5	9.

Exterior Walls		
1.Wood	5.Stucco	9.T-111
2.Vin/Al	6.Brick	10.Other
3.Compos.	7.Stone	11.
4.Asbestos	8.Concrete	12.

Roof Surface		
1.Asphalt	4.Composit	7.
2.Slate	5.Wood	8.
3.Metal	6.Other	9.

SF Masonry Trim
OPEN-3-CUSTOM
OPEN-4-CUSTOM
Year Built
Year Remodeled

Foundation		
1.Concrete	4.Wood	7.
2.C Block	5.Slab	8.
3.Br/Stone	6.Piers	9.

Basement		
1.1/4 Bmt	4.Full Bmt	7.
2.1/2 Bmt	5.None	8.
3.3/4 Bmt	6.	9.None

Bsmt Gar # Cars

Wet Basement		
1.Dry	4.	7.
2.Damp	5.	8.
3.Wet	6.	9.

SF Bsmt Living
Fin Bsmt Grade
OPEN 5 OPTIONAL

Heat Type **100%**		
1.HWBB	5.FWA	9.No Heat
2.HWCI	6.GravWA	10.
3.H Pump	7.Electric	11.
4.Steam	8.Fl/Wall	12.

Cool Type **0%**		
1.Refrig	4.W&C Air	7.
2.Evapor	5.	8.
3.H Pump	6.	9.None

Kitchen Style		
1.Modern	4.Obsolete	7.
2.Typical	5.	8.
3.Old Type	6.	9.None

Bath(s) Style		
1.Modern	4.Obsolete	7.
2.Typical	5.	8.
3.Old Type	6.	9.None

Rooms
Bedrooms
Full Baths
Half Baths
Addn Fixtures
Fireplaces

TRIO Software
A Division of Harris Computer Systems

Layout		
1.Typical	4.	7.
2.Inadeq	5.	8.
3.Poor	6.	9.

Attic		
1.1/4 Fin	4.Full Fin	7.
2.1/2 Fin	5.Fl/Stair	8.
3.3/4 Fin	6.	9.None

Insulation		
1.Full	4.Minimal	7.
2.Heavy	5.Partial	8.
3.Capped	6.	9.None

Unfinished %

Grade & Factor		
1.E Grade	4.B Grade	7.
2.D Grade	5.A Grade	8.SC Grade
3.C Grade	6.AA Grade	9.Same

SQFT (Footprint)

Condition		
1.Poor	4.Avg	7.V G
2.Fair	5.Avg+	8.Exc
3.Avg-	6.Good	9.Same

Phys. % Good
Funct. % Good

Functional Code		
1.Incomp	4.Delap	7.No Power
2.O-Built	5.Bsmt	8.LongTerm
3.Damage	6.Common	9.None

Econ. % Good

Economic Code		
0.None	3.No Power	7.
1.Location	4.Generate	8.
2.Encroach	9.None	9.

Entrance Code **1 Interior Inspect**		
1.Interior	4.Vacant	7.
2.Refusal	5.Estimate	8.
3.Informed	6.Reviewed	9.

Information Code **3 Tenant**		
1.Owner	4.Agent	7.
2.Relative	5.Estimate	8.
3.Tenant	6.Other	9.

Date Inspected 10/04/2018

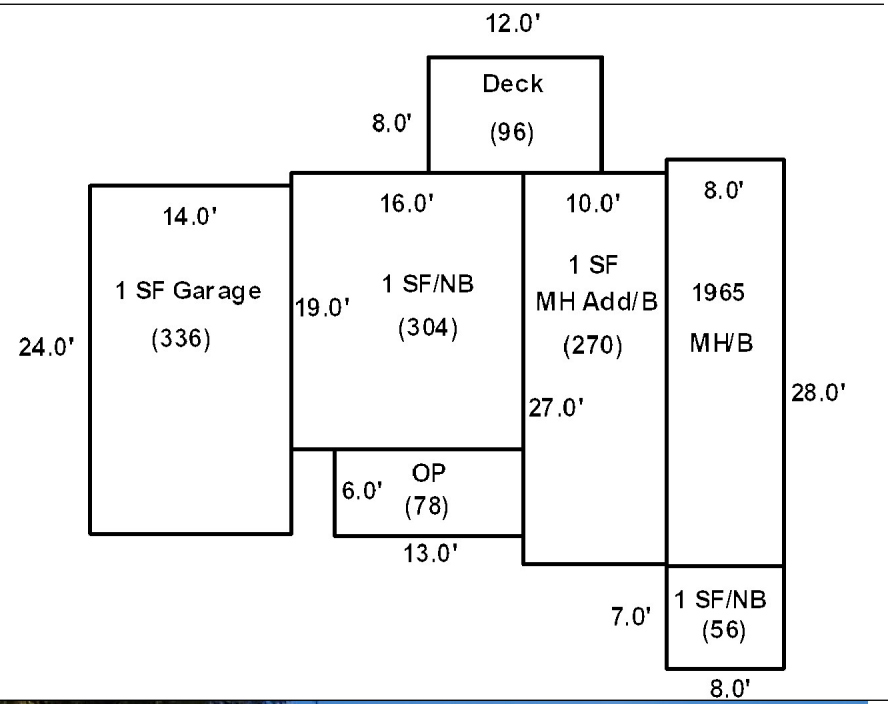

Additions, Outbuildings & Improvements

Type	Year	Units	Grade	Cond	Phys.	Funct.	Sound Value
1 One Story Frame	1975	304	2 110	4	0 %	100 %	
23 Frame Garage	1950	336	3 95	3	0 %	85 %	
21 Open Frame	1975	78	3 110	3	0 %	100 %	
1 One Story Frame	1980	56	3 100	4	0 %	100 %	
700 8 Mobile Home	1965	8x28	3 100	2	0 %	75 %	
27 Unfin Basement	1965	224	3 100	4	0 %	100 %	
18 1 S-MH add	1970	270	2 100	4	0 %	100 %	
27 Unfin Basement	1970	270	3 100	4	0 %	100 %	
					%	%	
					%	%	

1.One Story Fram
2.Two Story Fram
3.Three Story Fr
4.1 & 1/2 Story
5.1 & 3/4 Story
6.2 & 1/2 Story
21.Open Frame Por
22.Encl Frame Por
23.Frame Garage
24.Frame Shed
25.Frame Bay Wind
26.1SFr Overhang
27.Unfin Basement
28.Unfinished Att
29.Finished Attic

Map Lot 010-003 | Account 31 | Location 44 STORY STREET | Card 1 Of 1 | 12/09/2022

HOLMES, GARY
757 NEW DUNNTOWN ROAD
WADE ME 04786

B5855P24 B5977P78

Previous Owner
MAXWELL, DELMER E. JR
56 TURBATS CREEK RD

KENNEBUNKPORT ME 04046
Sale Date: 1/08/2020

Previous Owner
MAXWELL, AMANDA S.
46 Route 27, Apt. 20

Raymond NH 03077
Sale Date: 12/26/2018

Previous Owner
MAXWELL, HEIRS OF DELMER E.
c/o DELMER E. MAXWELL, JR.
56 TURBAT'S CREEK ROAD
KENNEBUNKPORT ME 04046
Sale Date: 11/10/2017

Inspection Witnessed By:

X Date

No./Date	Description	Date Insp.

Notes:
*-15% for size of MH during reval.

Washburn

Property Data

Neighborhood **1 Neighborhood One**

Tree Growth Year **0**

1ST MORTGAGE **0**

2ND MORTGAGE **0**

Zone/Land Use **1 Residential**

Secondary Zone

Topography **1 Level**

1.Level 4.Below St 7.LevelBog
2.Rolling 5.Low 8.
3.Above St 6.Swampy 9.

Utilities **2 Public Water** **3 Public Sewer**

1.Public 4.Dr Well 7.Cesspool
2.Water 5.Dug Well 8.
3.Sewer 6.Septic 9.None

Street **1 Paved**

1.Paved 4.Proposed 7.
2.Semi Imp 5.R/O/W 8.
3.Gravel 6. 9.None

TG PLAN YEAR **0**

Tif District # **0**

Sale Data

Sale Date **1/08/2020**

Price **7,000**

Sale Type **2 Land & Buildings**

1.Land 4.Mobile 7.C/I L&B
2.L & B 5.Other 8.
3.Building 6.C/I Land 9.

Financing **1 Conventional**

1.Convent 4.Seller 7.
2.FHA/VA 5.Private 8.
3.Assumed 6.Cash 9.Unknown

Validity **1 Arms Length Sale**

1.Valid 4.Split 7.Renovate
2.Related 5.Partial 8.Other
3.Distress 6.Exempt 9.

Verified **5 Public Record**

1.Buyer 4.Agent 7.Family
2.Seller 5.Pub Rec 8.Other
3.Lender 6.MLS 9.

Assessment Record

Year	Land	Buildings	Exempt	Total
2009	4,500	12,900	0	17,400
2012	4,500	12,900	0	17,400
2013	5,800	12,900	0	18,700
2015	5,800	12,900	0	18,700
2018	5,800	12,900	0	18,700
2019	8,600	7,900	0	16,500
2020	8,600	7,800	0	16,400
2021	8,600	7,900	0	16,500
2022	8,600	8,200	0	16,800

Land Data

Front Foot	Type	Effective Frontage	Effective Depth	Influence Factor	Influence Code
11.Regular Lot				%	
12.Delta Triangle				%	
13.Nabla Triangle				%	
14.Rear Land				%	
15.Class I Road				%	
				%	
				%	
Square Foot		**Square Feet**			
16.Class II Road				%	
17.Municipal Rese				%	
18.Munic Sep Lago				%	
19.Gravel Pit				%	
20.Industrial Bas				%	
				%	
				%	
Fract. Acre		**Acreage/Sites**			
21.Developed Pave	21	0.27		100 %	0
22.Undev Paved (F				%	
23.Developed Grav				%	
Acres				%	
24.Undev Gravel (				%	
25.Comm Base Pave				%	
26.Comm Base Grav				%	
27.Backlot				%	
28.Rear Land				%	
29.Pavement				%	

Total Acreage 0.27

Influence Codes

1.Unimproved
2.Excess Frtg
3.Topography
4.Size/Shape
5.Access
6.Restriction
7.Open Space
8.View/Environ
9.Fract Share
Acres
30.Utility R O W
31.Tillable
32.Pasture
33.Orchard
34.Softwood F&O
35.Mixed Wood F&O
36.Hardwood F&O
37.Softwood TG
38.Mixed Wood TG
39.Hardwood TG
40.Wasteland
41.Open Space
42.Mobile Home Si
43.Condo Site
44.Lot Improvemen
45.Subdivision Lo
46.Heavy Ind Sit

Washburn

Map Lot 010-003 | Account 31 | Location 44 STORY STREET | Card 1 Of 1 | 12/09/2022

Building Style **0**		
1.Conv.	5.Garrison	9.Gambrel
2.Ranch	6.Salt Box	10.Other
3.R Ranch	7.Contemp	11.Split
4.Cape	8.Log	12.
Dwelling Units **0**		
Other Units **0**		
Stories **0**		
1.1	4.1.5	7.
2.2	5.1.75	8.
3.3	6.2.5	9.
Exterior Walls **0**		
1.Wood	5.Stucco	9.T-111
2.Vin/Al	6.Brick	10.Other
3.Compos.	7.Stone	11.
4.Asbestos	8.Concrete	12.
Roof Surface **0**		
1.Asphalt	4.Composit	7.
2.Slate	5.Wood	8.
3.Metal	6.Other	9.
SF Masonry Trim **0**		
OPEN-3-CUSTOM **0**		
OPEN-4-CUSTOM **0**		
Year Built **0**		
Year Remodeled **0**		
Foundation **0**		
1.Concrete	4.Wood	7.
2.C Block	5.Slab	8.
3.Br/Stone	6.Piers	9.
Basement **0**		
1.1/4 Bmt	4.Full Bmt	7.
2.1/2 Bmt	5.None	8.
3.3/4 Bmt	6.	9.None
Bsmt Gar # Cars **0**		
Wet Basement **0**		
1.Dry	4.	7.
2.Damp	5.	8.
3.Wet	6.	9.

SF Bsmt Living **0**		
Fin Bsmt Grade **0 0**		
OPEN 5 OPTIONAL **0**		
Heat Type **100%** **0**		
1.HWBB	5.FWA	9.No Heat
2.HWCI	6.GravWA	10.
3.H Pump	7.Electric	11.
4.Steam	8.Fl/Wall	12.
Cool Type **0%** **9 None**		
1.Refrig	4.W&C Air	7.
2.Evapor	5.	8.
3.H Pump	6.	9.None
Kitchen Style **0**		
1.Modern	4.Obsolete	7.
2.Typical	5.	8.
3.Old Type	6.	9.None
Bath(s) Style **0**		
1.Modern	4.Obsolete	7.
2.Typical	5.	8.
3.Old Type	6.	9.None
# Rooms **0**		
# Bedrooms **0**		
# Full Baths **0**		
# Half Baths **0**		
# Addn Fixtures **0**		
# Fireplaces **0**		

TRIO Software
A Division of Harris Computer Systems

Layout **0**		
1.Typical	4.	7.
2.Inadeq	5.	8.
3.Poor	6.	9.
Attic **0**		
1.1/4 Fin	4.Full Fin	7.
2.1/2 Fin	5.Fl/Stair	8.
3.3/4 Fin	6.	9.None
Insulation **0**		
1.Full	4.Minimal	7.
2.Heavy	5.Partial	8.
3.Capped	6.	9.None
Unfinished % **0%**		
Grade & Factor **0 0%**		
1.E Grade	4.B Grade	7.
2.D Grade	5.A Grade	8.SC Grade
3.C Grade	6.AA Grade	9.Same
SQFT (Footprint) **0**		
Condition **0**		
1.Poor	4.Avg	7.V G
2.Fair	5.Avg+	8.Exc
3.Avg-	6.Good	9.Same
Phys. % Good **0%**		
Funct. % Good **100%**		
Functional Code **9 None**		
1.Incomp	4.Delap	7.No Power
2.O-Built	5.Bsmt	8.LongTerm
3.Damage	6.Common	9.None
Econ. % Good **100%**		
Economic Code **None**		
0.None	3.No Power	7.
1.Location	4.Generate	8.
2.Encroach	9.None	9.
Entrance Code **5 Estimated**		
1.Interior	4.Vacant	7.
2.Refusal	5.Estimate	8.
3.Informed	6.Reviewed	9.
Information Code **5 Estimate**		
1.Owner	4.Agent	7.
2.Relative	5.Estimate	8.
3.Tenant	6.Other	9.

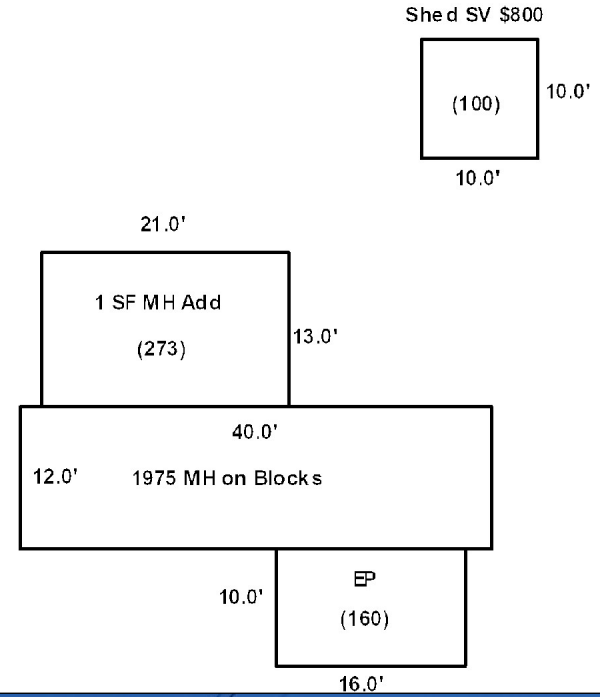

Date Inspected 10/01/2018

Additions, Outbuildings & Improvements

Type	Year	Units	Grade	Cond	Phys.	Funct.	Sound Value
997 12Mobile Home	1975	12x40	3 100	3	0 %	85 %	
22 Encl Frame Porch	1980	160	2 115	4	0 %	100 %	
18 1 S-MH add	1975	273	2 115	3	0 %	100 %	
24 Frame Shed	0				%	%	800
					%	%	
					%	%	
					%	%	
					%	%	
					%	%	
					%	%	

1.One Story Fram
2.Two Story Fram
3.Three Story Fr
4.1 & 1/2 Story
5.1 & 3/4 Story
6.2 & 1/2 Story
21.Open Frame Por
22.Encl Frame Por
23.Frame Garage
24.Frame Shed
25.Frame Bay Wind
26.1SFr Overhang
27.Unfin Basement
28.Unfinished Att
29.Finished Attic

Map Lot 010-004 | Account 45 | Location 50 STORY STREET | Card 1 Of 1 | 12/09/2022

BRAGG, WINSTON
BRAGG, BARBARA
50 STORY STREET
WASHBURN ME 04786

B4648P13 B5319P156 B5654P73

Property Data

Neighborhood **1 Neighborhood One**

Tree Growth Year **0**

1ST MORTGAGE **0**

2ND MORTGAGE **0**

Zone/Land Use **1 Residential**

Secondary Zone

Topography **1 Level**

1.Level	4.Below St	7.LevelBog
2.Rolling	5.Low	8.
3.Above St	6.Swampy	9.

Utilities **2 Public Water** **3 Public Sewer**

1.Public	4.Dr Well	7.Cesspool
2.Water	5.Dug Well	8.
3.Sewer	6.Septic	9.None

Street **1 Paved**

1.Paved	4.Proposed	7.
2.Semi Imp	5.R/O/W	8.
3.Gravel	6.	9.None

TG PLAN YEAR **0**

Tif District # **0**

Sale Data

Sale Date **10/31/2008**

Price

Sale Type **2 Land & Buildings**

1.Land	4.Mobile	7.C/I L&B
2.L & B	5.Other	8.
3.Building	6.C/I Land	9.

Financing **1 Conventional**

1.Convent	4.Seller	7.
2.FHA/VA	5.Private	8.
3.Assumed	6.Cash	9.Unknown

Validity **2 Related Parties**

1.Valid	4.Split	7.Renovate
2.Related	5.Partial	8.Other
3.Distress	6.Exempt	9.

Verified **5 Public Record**

1.Buyer	4.Agent	7.Family
2.Seller	5.Pub Rec	8.Other
3.Lender	6.MLS	9.

Assessment Record

Year	Land	Buildings	Exempt	Total
2009	5,300	52,100	9,000	48,400
2012	5,300	71,000	8,800	67,500
2013	6,900	71,000	8,800	69,100
2015	6,900	71,000	9,000	68,900
2018	6,900	77,000	23,920	59,980
2019	16,700	90,100	26,000	80,800
2020	16,700	89,900	31,000	75,600
2021	16,700	90,100	31,000	75,800
2022	16,700	94,600	31,000	80,300

Land Data

Front Foot	Type	Effective Frontage	Effective Depth	Influence Factor	Influence Code
11.Regular Lot				%	
12.Delta Triangle				%	
13.Nabla Triangle				%	
14.Rear Land				%	
15.Class I Road				%	
				%	
				%	
Square Foot		**Square Feet**			
16.Class II Road	29	2,700		100 %	0
17.Municipal Rese				%	
18.Munic Sep Lago				%	
19.Gravel Pit				%	
20.Industrial Bas				%	
				%	
				%	
Fract. Acre		**Acreage/Sites**			
21.Developed Pave	21	0.36		100 %	0
22.Undev Paved (F				%	
23.Developed Grav				%	
Acres				%	
24.Undev Gravel (				%	
25.Comm Base Pave				%	
26.Comm Base Grav				%	
27.Backlot				%	
28.Rear Land				%	
29.Pavement				%	

Total Acreage 0.36

Influence Codes

1.Unimproved
2.Excess Frtg
3.Topography
4.Size/Shape
5.Access
6.Restriction
7.Open Space
8.View/Environ
9.Fract Share
Acres
30.Utility R O W
31.Tillable
32.Pasture
33.Orchard
34.Softwood F&O
35.Mixed Wood F&O
36.Hardwood F&O
37.Softwood TG
38.Mixed Wood TG
39.Hardwood TG
40.Wasteland
41.Open Space
42.Mobile Home Si
43.Condo Site
44.Lot Improvemen
45.Subdivision Lo
46.Heavy Ind Sit

Inspection Witnessed By:

X Date

No./Date	Description	Date Insp.

Notes:

*-5% for 1/4 attached garage during reval. -5% off dwelling because half the basement is dirt floors.

Washburn

Washburn

Map Lot 010-004 | Account 45 | Location 50 STORY STREET | Card 1 Of 1 | 12/09/2022

Building Style	**2 Ranch**		
1.Conv.	5.Garrison	9.Gambrel	
2.Ranch	6.Salt Box	10.Other	
3.R Ranch	7.Contemp	11.Split	
4.Cape	8.Log	12.	
Dwelling Units	**1**		
Other Units	**0**		
Stories	**1 One Story**		
1.1	4.1.5	7.	
2.2	5.1.75	8.	
3.3	6.2.5	9.	
Exterior Walls	**2 Vinyl/Aluminum**		
1.Wood	5.Stucco	9.T-111	
2.Vin/Al	6.Brick	10.Other	
3.Compos.	7.Stone	11.	
4.Asbestos	8.Concrete	12.	
Roof Surface	**1 Asphalt Shingles**		
1.Asphalt	4.Composit	7.	
2.Slate	5.Wood	8.	
3.Metal	6.Other	9.	
SF Masonry Trim	**0**		
OPEN-3-CUSTOM	**0**		
OPEN-4-CUSTOM	**0**		
Year Built	**1955**		
Year Remodeled	**0**		
Foundation	**1 Concrete**		
1.Concrete	4.Wood	7.	
2.C Block	5.Slab	8.	
3.Br/Stone	6.Piers	9.	
Basement	**3 3/4 Basement**		
1.1/4 Bmt	4.Full Bmt	7.	
2.1/2 Bmt	5.None	8.	
3.3/4 Bmt	6.	9.None	
Bsmt Gar # Cars	**0**		
Wet Basement	**1 Dry Basement**		
1.Dry	4.	7.	
2.Damp	5.	8.	
3.Wet	6.	9.	

SF Bsmt Living	**0**		
Fin Bsmt Grade	**0 0**		
OPEN 5 OPTIONAL	**0**		
Heat Type	**100%**	**5 Forced Warm Air**	
1.HWBB	5.FWA	9.No Heat	
2.HWCI	6.GravWA	10.	
3.H Pump	7.Electric	11.	
4.Steam	8.Fl/Wall	12.	
Cool Type	**100%**	**3 Heat Pump**	
1.Refrig	4.W&C Air	7.	
2.Evapor	5.	8.	
3.H Pump	6.	9.None	
Kitchen Style	**2 Typical**		
1.Modern	4.Obsolete	7.	
2.Typical	5.	8.	
3.Old Type	6.	9.None	
Bath(s) Style	**2 Typical Bath(s)**		
1.Modern	4.Obsolete	7.	
2.Typical	5.	8.	
3.Old Type	6.	9.None	
# Rooms	**5**		
# Bedrooms	**2**		
# Full Baths	**2**		
# Half Baths	**0**		
# Addn Fixtures	**0**		
# Fireplaces	**0**		

TRIO Software
A Division of Harris Computer Systems

Layout	**1 Typical**		
1.Typical	4.	7.	
2.Inadeq	5.	8.	
3.Poor	6.	9.	
Attic	**9 None**		
1.1/4 Fin	4.Full Fin	7.	
2.1/2 Fin	5.Fl/Stair	8.	
3.3/4 Fin	6.	9.None	
Insulation	**1 Full**		
1.Full	4.Minimal	7.	
2.Heavy	5.Partial	8.	
3.Capped	6.	9.None	
Unfinished %	**0%**		
Grade & Factor	**3 Average 100%**		
1.E Grade	4.B Grade	7.	
2.D Grade	5.A Grade	8.SC Grade	
3.C Grade	6.AA Grade	9.Same	
SQFT (Footprint)	**960**		
Condition	**6 Good**		
1.Poor	4.Avg	7.V G	
2.Fair	5.Avg+	8.Exc	
3.Avg-	6.Good	9.Same	
Phys. % Good	**0%**		
Funct. % Good	**95%**		
Functional Code	**5 Basement**		
1.Incomp	4.Delap	7.No Power	
2.O-Built	5.Bsmt	8.LongTerm	
3.Damage	6.Common	9.None	
Econ. % Good	**100%**		
Economic Code	**None**		
0.None	3.No Power	7.	
1.Location	4.Generate	8.	
2.Encroach	9.None	9.	
Entrance Code	**1 Interior Inspect**		
1.Interior	4.Vacant	7.	
2.Refusal	5.Estimate	8.	
3.Informed	6.Reviewed	9.	
Information Code	**1 Owner**		
1.Owner	4.Agent	7.	
2.Relative	5.Estimate	8.	
3.Tenant	6.Other	9.	

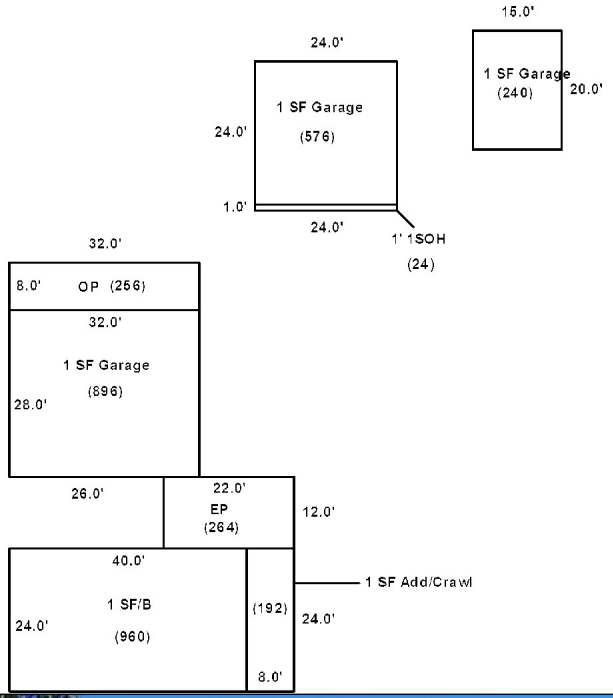

Date Inspected 10/01/2018

Additions, Outbuildings & Improvements

Type	Year	Units	Grade	Cond	Phys.	Funct.	Sound Value
1 One Story Frame	1965	192	3 100	5	0 %	100 %	
22 Encl Frame Porch	1965	264	2 115	4	0 %	100 %	
23 Frame Garage	1965	896	3 95	5	0 %	95 %	
21 Open Frame	2018	256	3 100	4	0 %	100 %	
23 Frame Garage	2016	576	3 100	4	0 %	100 %	
26 1SFr Overhang	2016	24	3 100	4	0 %	100 %	
23 Frame Garage	2015	240	3 100	4	0 %	100 %	
					%	%	
					%	%	
					%	%	

1.One Story Fram
2.Two Story Fram
3.Three Story Fr
4.1 & 1/2 Story
5.1 & 3/4 Story
6.2 & 1/2 Story
21.Open Frame Por
22.Encl Frame Por
23.Frame Garage
24.Frame Shed
25.Frame Bay Wind
26.1SFr Overhang
27.Unfin Basement
28.Unfinished Att
29.Finished Attic

Map Lot 010-005 Account 281 Location 54 Story Street Card 1 Of 1 12/09/2022

Corey, Earlin D
Wark, Richard M
P.O. BOX 2
WASHBURN ME 04786

B3560P83 B4962P128 B5726P174

Property Data

Neighborhood **1 Neighborhood One**

Tree Growth Year **0**

1ST MORTGAGE **0**

2ND MORTGAGE **0**

Zone/Land Use **1 Residential**

Secondary Zone

Topography **1 Level**

1.Level	4.Below St	7.LevelBog
2.Rolling	5.Low	8.
3.Above St	6.Swampy	9.

Utilities **2 Public Water** **3 Public Sewer**

1.Public	4.Dr Well	7.Cesspool
2.Water	5.Dug Well	8.
3.Sewer	6.Septic	9.None

Street **1 Paved**

1.Paved	4.Proposed	7.
2.Semi Imp	5.R/O/W	8.
3.Gravel	6.	9.None

TG PLAN YEAR **0**

Tif District # **0**

Sale Data

Sale Date **9/01/2001**

Price

Sale Type **2 Land & Buildings**

1.Land	4.Mobile	7.C/I L&B
2.L & B	5.Other	8.
3.Building	6.C/I Land	9.

Financing **1 Conventional**

1.Convent	4.Seller	7.
2.FHA/VA	5.Private	8.
3.Assumed	6.Cash	9.Unknown

Validity **2 Related Parties**

1.Valid	4.Split	7.Renovate
2.Related	5.Partial	8.Other
3.Distress	6.Exempt	9.

Verified **5 Public Record**

1.Buyer	4.Agent	7.Family
2.Seller	5.Pub Rec	8.Other
3.Lender	6.MLS	9.

Assessment Record

Year	Land	Buildings	Exempt	Total
2009	3,100	66,300	9,000	60,400
2012	3,100	66,300	8,800	60,600
2013	4,100	66,300	8,800	61,600
2015	4,100	66,300	9,000	61,400
2018	4,100	66,300	18,400	52,000
2019	8,600	74,200	20,000	62,800
2020	8,600	74,200	25,000	57,800
2021	8,600	74,200	25,000	57,800
2022	8,600	77,900	25,000	61,500

Land Data

Front Foot	Type	Effective Frontage	Effective Depth	Influence Factor	Influence Code
11.Regular Lot				%	
12.Delta Triangle				%	
13.Nabla Triangle				%	
14.Rear Land				%	
15.Class I Road				%	
				%	
				%	
Square Foot		**Square Feet**			
16.Class II Road	29	836		75 %	0
17.Municipal Rese				%	
18.Munic Sep Lago				%	
19.Gravel Pit				%	
20.Industrial Bas				%	
				%	
				%	
Fract. Acre		**Acreage/Sites**			
21.Developed Pave	21	0.18		100 %	0
22.Undev Paved (F				%	
23.Developed Grav				%	
Acres				%	
24.Undev Gravel (				%	
25.Comm Base Pave				%	
26.Comm Base Grav				%	
27.Backlot				%	
28.Rear Land				%	
29.Pavement				%	

Total Acreage 0.18

Influence Codes

1.Unimproved
2.Excess Frtg
3.Topography
4.Size/Shape
5.Access
6.Restriction
7.Open Space
8.View/Environ
9.Fract Share
Acres
30.Utility R O W
31.Tillable
32.Pasture
33.Orchard
34.Softwood F&O
35.Mixed Wood F&O
36.Hardwood F&O
37.Softwood TG
38.Mixed Wood TG
39.Hardwood TG
40.Wasteland
41.Open Space
42.Mobile Home Si
43.Condo Site
44.Lot Improvemen
45.Subdivision Lo
46.Heavy Ind Sit

Inspection Witnessed By:

X Date

No./Date	Description	Date Insp.

Notes:
*2-14-2019 -15% for attached garage.

Washburn

Washburn

Map Lot 010-005 | Account 281 | Location 54 Story Street | Card 1 Of 1 | 12/09/2022

Building Style	**2 Ranch**		
1.Conv.	5.Garrison	9.Gambrel	
2.Ranch	6.Salt Box	10.Other	
3.R Ranch	7.Contemp	11.Split	
4.Cape	8.Log	12.	
Dwelling Units	**1**		
Other Units	**0**		
Stories	**1 One Story**		
1.1	4.1.5	7.	
2.2	5.1.75	8.	
3.3	6.2.5	9.	
Exterior Walls	**4 Asbestos Siding**		
1.Wood	5.Stucco	9.T-111	
2.Vin/Al	6.Brick	10.Other	
3.Compos.	7.Stone	11.	
4.Asbestos	8.Concrete	12.	
Roof Surface	**3 Sheet Metal**		
1.Asphalt	4.Composit	7.	
2.Slate	5.Wood	8.	
3.Metal	6.Other	9.	
SF Masonry Trim	**0**		
OPEN-3-CUSTOM	**0**		
OPEN-4-CUSTOM	**0**		
Year Built	**1969**		
Year Remodeled	**0**		
Foundation	**1 Concrete**		
1.Concrete	4.Wood	7.	
2.C Block	5.Slab	8.	
3.Br/Stone	6.Piers	9.	
Basement	**4 Full Basement**		
1.1/4 Bmt	4.Full Bmt	7.	
2.1/2 Bmt	5.None	8.	
3.3/4 Bmt	6.	9.None	
Bsmt Gar # Cars	**0**		
Wet Basement	**1 Dry Basement**		
1.Dry	4.	7.	
2.Damp	5.	8.	
3.Wet	6.	9.	

SF Bsmt Living	**0**		
Fin Bsmt Grade	**0 0**		
OPEN 5 OPTIONAL	**0**		
Heat Type	**100%**	**1 Hot Water BB**	
1.HWBB	5.FWA	9.No Heat	
2.HWCI	6.GravWA	10.	
3.H Pump	7.Electric	11.	
4.Steam	8.Fl/Wall	12.	
Cool Type	**0%**	**9 None**	
1.Refrig	4.W&C Air	7.	
2.Evapor	5.	8.	
3.H Pump	6.	9.None	
Kitchen Style	**2 Typical**		
1.Modern	4.Obsolete	7.	
2.Typical	5.	8.	
3.Old Type	6.	9.None	
Bath(s) Style	**2 Typical Bath(s)**		
1.Modern	4.Obsolete	7.	
2.Typical	5.	8.	
3.Old Type	6.	9.None	
# Rooms	**5**		
# Bedrooms	**3**		
# Full Baths	**1**		
# Half Baths	**0**		
# Addn Fixtures	**0**		
# Fireplaces	**0**		

TRIO Software
A Division of Harris Computer Systems

Layout	**1 Typical**		
1.Typical	4.	7.	
2.Inadeq	5.	8.	
3.Poor	6.	9.	
Attic	**9 None**		
1.1/4 Fin	4.Full Fin	7.	
2.1/2 Fin	5.Fl/Stair	8.	
3.3/4 Fin	6.	9.None	
Insulation	**1 Full**		
1.Full	4.Minimal	7.	
2.Heavy	5.Partial	8.	
3.Capped	6.	9.None	
Unfinished %	**0%**		
Grade & Factor	**3 Average 100%**		
1.E Grade	4.B Grade	7.	
2.D Grade	5.A Grade	8.SC Grade	
3.C Grade	6.AA Grade	9.Same	
SQFT (Footprint)	**1224**		
Condition	**5 Above Average**		
1.Poor	4.Avg	7.V G	
2.Fair	5.Avg+	8.Exc	
3.Avg-	6.Good	9.Same	
Phys. % Good	**0%**		
Funct. % Good	**100%**		
Functional Code	**9 None**		
1.Incomp	4.Delap	7.No Power	
2.O-Built	5.Bsmt	8.LongTerm	
3.Damage	6.Common	9.None	
Econ. % Good	**100%**		
Economic Code	**None**		
0.None	3.No Power	7.	
1.Location	4.Generate	8.	
2.Encroach	9.None	9.	
Entrance Code	**3 Information Only**		
1.Interior	4.Vacant	7.	
2.Refusal	5.Estimate	8.	
3.Informed	6.Reviewed	9.	
Information Code	**0**		
1.Owner	4.Agent	7.	
2.Relative	5.Estimate	8.	
3.Tenant	6.Other	9.	

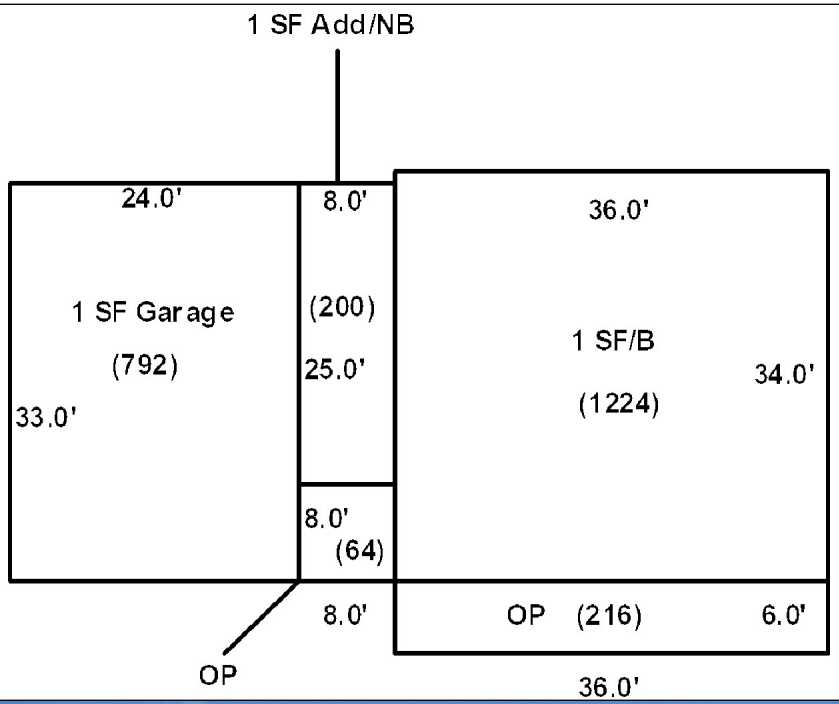

Date Inspected 10/01/2018

Additions, Outbuildings & Improvements

Type	Year	Units	Grade	Cond	Phys.	Funct.	Sound Value
21 Open Frame	1969	216	2 110	4	0 %	100 %	
21 Open Frame	1969	64	3 95	4	0 %	100 %	
1 One Story Frame	1969	200	9 100	9	0 %	100 %	
23 Frame Garage	1969	792	3 95	4	0 %	85 %	
					%	%	
					%	%	
					%	%	
					%	%	
					%	%	
					%	%	

1.One Story Fram
2.Two Story Fram
3.Three Story Fr
4.1 & 1/2 Story
5.1 & 3/4 Story
6.2 & 1/2 Story
21.Open Frame Por
22.Encl Frame Por
23.Frame Garage
24.Frame Shed
25.Frame Bay Wind
26.1SFr Overhang
27.Unfin Basement
28.Unfinished Att
29.Finished Attic

Map Lot 010-006 | Account 885 | Location 56 STORY STREET | Card 1 Of 1 | 12/09/2022

STUBBS, ANN L
56 STORY STREET
WASHBURN ME 04786

B5385P195

Previous Owner
TARBOX, MICHAEL A.
TARBOX, LYNN M.
36 CENTER STREET
FORT FAIRFIELD ME 04742
Sale Date: 12/22/2014

Inspection Witnessed By:

X Date

No./Date	Description	Date Insp.

Notes:

Property Data

Neighborhood	**1 Neighborhood One**
Tree Growth Year	**0**
1ST MORTGAGE	**0**
2ND MORTGAGE	**0**
Zone/Land Use	**1 Residential**
Secondary Zone	
Topography	**1 Level**

1.Level	4.Below St	7.LevelBog
2.Rolling	5.Low	8.
3.Above St	6.Swampy	9.

Utilities **2 Public Water** **3 Public Sewer**

1.Public	4.Dr Well	7.Cesspool
2.Water	5.Dug Well	8.
3.Sewer	6.Septic	9.None

Street **1 Paved**

1.Paved	4.Proposed	7.
2.Semi Imp	5.R/O/W	8.
3.Gravel	6.	9.None

TG PLAN YEAR	**0**
Tif District #	**0**

Sale Data

Sale Date	**12/22/2014**
Price	**62,000**

Sale Type **2 Land & Buildings**

1.Land	4.Mobile	7.C/I L&B
2.L & B	5.Other	8.
3.Building	6.C/I Land	9.

Financing **2 FHA or VA**

1.Convent	4.Seller	7.
2.FHA/VA	5.Private	8.
3.Assumed	6.Cash	9.Unknown

Validity **1 Arms Length Sale**

1.Valid	4.Split	7.Renovate
2.Related	5.Partial	8.Other
3.Distress	6.Exempt	9.

Verified **5 Public Record**

1.Buyer	4.Agent	7.Family
2.Seller	5.Pub Rec	8.Other
3.Lender	6.MLS	9.

Assessment Record

Year	Land	Buildings	Exempt	Total
2009	5,300	12,500	9,000	8,800
2012	5,300	12,500	8,800	9,000
2013	6,900	12,500	0	19,400
2015	6,900	12,500	0	19,400
2018	6,900	37,200	18,400	25,700
2019	9,900	50,200	20,000	40,100
2020	9,900	50,200	25,000	35,100
2021	9,900	50,200	25,000	35,100
2022	9,900	52,600	25,000	37,500

Land Data

Front Foot	Type	Effective Frontage	Effective Depth	Influence Factor	Influence Code
11.Regular Lot				%	
12.Delta Triangle				%	
13.Nabla Triangle				%	
14.Rear Land				%	
15.Class I Road				%	
				%	
				%	
Square Foot		**Square Feet**			
16.Class II Road				%	
17.Municipal Rese				%	
18.Munic Sep Lago				%	
19.Gravel Pit				%	
20.Industrial Bas				%	
				%	
				%	
Fract. Acre		**Acreage/Sites**			
21.Developed Pave	21	0.36		100 %	0
22.Undev Paved (F				%	
23.Developed Grav				%	
Acres				%	
24.Undev Gravel (				%	
25.Comm Base Pave				%	
26.Comm Base Grav				%	
27.Backlot				%	
28.Rear Land				%	
29.Pavement				%	

Total Acreage 0.36

Influence Codes

1.Unimproved
2.Excess Frtg
3.Topography
4.Size/Shape
5.Access
6.Restriction
7.Open Space
8.View/Environ
9.Fract Share
Acres
30.Utility R O W
31.Tillable
32.Pasture
33.Orchard
34.Softwood F&O
35.Mixed Wood F&O
36.Hardwood F&O
37.Softwood TG
38.Mixed Wood TG
39.Hardwood TG
40.Wasteland
41.Open Space
42.Mobile Home Si
43.Condo Site
44.Lot Improvemen
45.Subdivision Lo
46.Heavy Ind Sit

Washburn

Washburn

Map Lot 010-006 | Account 885 | Location 56 STORY STREET | Card 1 Of 1 | 12/09/2022

Building Style	**2 Ranch**		
1.Conv.	5.Garrison	9.Gambrel	
2.Ranch	6.Salt Box	10.Other	
3.R Ranch	7.Contemp	11.Split	
4.Cape	8.Log	12.	
Dwelling Units	**1**		
Other Units	**0**		
Stories	**1 One Story**		
1.1	4.1.5	7.	
2.2	5.1.75	8.	
3.3	6.2.5	9.	
Exterior Walls	**2 Vinyl/Aluminum**		
1.Wood	5.Stucco	9.T-111	
2.Vin/Al	6.Brick	10.Other	
3.Compos.	7.Stone	11.	
4.Asbestos	8.Concrete	12.	
Roof Surface	**3 Sheet Metal**		
1.Asphalt	4.Composit	7.	
2.Slate	5.Wood	8.	
3.Metal	6.Other	9.	
SF Masonry Trim	**0**		
OPEN-3-CUSTOM	**0**		
OPEN-4-CUSTOM	**0**		
Year Built	**1965**		
Year Remodeled	**0**		
Foundation	**1 Concrete**		
1.Concrete	4.Wood	7.	
2.C Block	5.Slab	8.	
3.Br/Stone	6.Piers	9.	
Basement	**5 Crawl Space**		
1.1/4 Bmt	4.Full Bmt	7.	
2.1/2 Bmt	5.None	8.	
3.3/4 Bmt	6.	9.None	
Bsmt Gar # Cars	**0**		
Wet Basement	**2 Damp Basement**		
1.Dry	4.	7.	
2.Damp	5.	8.	
3.Wet	6.	9.	

SF Bsmt Living	**0**		
Fin Bsmt Grade	**0 0**		
OPEN 5 OPTIONAL	**0**		
Heat Type	**100%**	**5 Forced Warm Air**	
1.HWBB	5.FWA	9.No Heat	
2.HWCI	6.GravWA	10.	
3.H Pump	7.Electric	11.	
4.Steam	8.Fl/Wall	12.	
Cool Type	**0%**	**9 None**	
1.Refrig	4.W&C Air	7.	
2.Evapor	5.	8.	
3.H Pump	6.	9.None	
Kitchen Style	**2 Typical**		
1.Modern	4.Obsolete	7.	
2.Typical	5.	8.	
3.Old Type	6.	9.None	
Bath(s) Style	**2 Typical Bath(s)**		
1.Modern	4.Obsolete	7.	
2.Typical	5.	8.	
3.Old Type	6.	9.None	
# Rooms	**5**		
# Bedrooms	**2**		
# Full Baths	**1**		
# Half Baths	**0**		
# Addn Fixtures	**0**		
# Fireplaces	**0**		

TRIO Software
A Division of Harris Computer Systems

Layout	**1 Typical**		
1.Typical	4.	7.	
2.Inadeq	5.	8.	
3.Poor	6.	9.	
Attic	**9 None**		
1.1/4 Fin	4.Full Fin	7.	
2.1/2 Fin	5.Fl/Stair	8.	
3.3/4 Fin	6.	9.None	
Insulation	**1 Full**		
1.Full	4.Minimal	7.	
2.Heavy	5.Partial	8.	
3.Capped	6.	9.None	
Unfinished %	**0%**		
Grade & Factor	**3 Average 115%**		
1.E Grade	4.B Grade	7.	
2.D Grade	5.A Grade	8.SC Grade	
3.C Grade	6.AA Grade	9.Same	
SQFT (Footprint)	**864**		
Condition	**7 Very Good**		
1.Poor	4.Avg	7.V G	
2.Fair	5.Avg+	8.Exc	
3.Avg-	6.Good	9.Same	
Phys. % Good	**0%**		
Funct. % Good	**100%**		
Functional Code	**9 None**		
1.Incomp	4.Delap	7.No Power	
2.O-Built	5.Bsmt	8.LongTerm	
3.Damage	6.Common	9.None	
Econ. % Good	**100%**		
Economic Code	**None**		
0.None	3.No Power	7.	
1.Location	4.Generate	8.	
2.Encroach	9.None	9.	
Entrance Code	**1 Interior Inspect**		
1.Interior	4.Vacant	7.	
2.Refusal	5.Estimate	8.	
3.Informed	6.Reviewed	9.	
Information Code	**1 Owner**		
1.Owner	4.Agent	7.	
2.Relative	5.Estimate	8.	
3.Tenant	6.Other	9.	

Date Inspected 5/01/2019

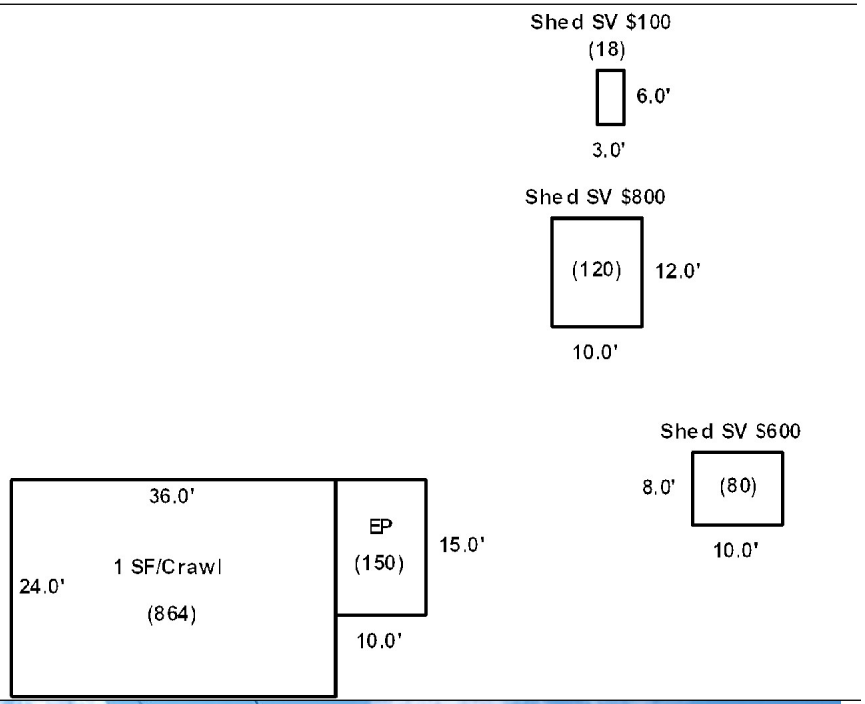

Additions, Outbuildings & Improvements

Type	Year	Units	Grade	Cond	Phys.	Funct.	Sound Value
22 Encl Frame Porch	1980	150	3 100	4	0 %	100 %	
24 Frame Shed	0				%	%	800
24 Frame Shed	0				%	%	600
24 Frame Shed	0				%	%	100
					%	%	
					%	%	
					%	%	
					%	%	
					%	%	
					%	%	

1.One Story Fram
2.Two Story Fram
3.Three Story Fr
4.1 & 1/2 Story
5.1 & 3/4 Story
6.2 & 1/2 Story
21.Open Frame Por
22.Encl Frame Por
23.Frame Garage
24.Frame Shed
25.Frame Bay Wind
26.1SFr Overhang
27.Unfin Basement
28.Unfinished Att
29.Finished Attic

Map Lot 010-008 Account 477 Location 106 HINES STREET Card 1 Of 1 12/09/2022

DOW, MARTINA M
DOW, JR., JOHN W.
106 HINES STREET
WASHBURN ME 04786

B5948P10

Property Data

Neighborhood **1 Neighborhood One**

Tree Growth Year **0**

1ST MORTGAGE **0**

2ND MORTGAGE **0**

Zone/Land Use **1 Residential**

Secondary Zone

Topography **1 Level**

1.Level	4.Below St	7.LevelBog
2.Rolling	5.Low	8.
3.Above St	6.Swampy	9.

Utilities **2 Public Water** **3 Public Sewer**

1.Public	4.Dr Well	7.Cesspool
2.Water	5.Dug Well	8.
3.Sewer	6.Septic	9.None

Street **1 Paved**

1.Paved	4.Proposed	7.
2.Semi Imp	5.R/O/W	8.
3.Gravel	6.	9.None

TG PLAN YEAR **0**

Tif District # **0**

Sale Data

Sale Date **9/30/2000**

Price

Sale Type **2 Land & Buildings**

1.Land	4.Mobile	7.C/I L&B
2.L & B	5.Other	8.
3.Building	6.C/I Land	9.

Financing

1.Convent	4.Seller	7.
2.FHA/VA	5.Private	8.
3.Assumed	6.Cash	9.Unknown

Validity **2 Related Parties**

1.Valid	4.Split	7.Renovate
2.Related	5.Partial	8.Other
3.Distress	6.Exempt	9.

Verified **5 Public Record**

1.Buyer	4.Agent	7.Family
2.Seller	5.Pub Rec	8.Other
3.Lender	6.MLS	9.

Assessment Record

Year	Land	Buildings	Exempt	Total
2009	4,100	23,100	0	27,200
2012	4,100	23,100	8,800	18,400
2013	5,300	23,100	8,800	19,600
2015	5,300	23,100	9,000	19,400
2018	5,300	23,100	18,400	10,000
2019	9,000	50,100	20,000	39,100
2020	9,000	50,100	25,000	34,100
2021	9,000	50,100	25,000	34,100
2022	9,000	52,600	25,000	36,600

Land Data

Front Foot	Type	Effective Frontage	Effective Depth	Influence Factor	Influence Code
11.Regular Lot				%	
12.Delta Triangle				%	
13.Nabla Triangle				%	
14.Rear Land				%	
15.Class I Road				%	
				%	
				%	
Square Foot		**Square Feet**			
16.Class II Road	29	150		75 %	0
17.Municipal Rese				%	
18.Munic Sep Lago				%	
19.Gravel Pit				%	
20.Industrial Bas				%	
				%	
				%	
Fract. Acre		**Acreage/Sites**			
21.Developed Pave	21	0.28		100 %	0
22.Undev Paved (F				%	
23.Developed Grav				%	
Acres				%	
24.Undev Gravel (				%	
25.Comm Base Pave				%	
26.Comm Base Grav				%	
27.Backlot				%	
28.Rear Land				%	
29.Pavement				%	

Total Acreage 0.28

Influence Codes

1.Unimproved
2.Excess Frtg
3.Topography
4.Size/Shape
5.Access
6.Restriction
7.Open Space
8.View/Environ
9.Fract Share
Acres
30.Utility R O W
31.Tillable
32.Pasture
33.Orchard
34.Softwood F&O
35.Mixed Wood F&O
36.Hardwood F&O
37.Softwood TG
38.Mixed Wood TG
39.Hardwood TG
40.Wasteland
41.Open Space
42.Mobile Home Si
43.Condo Site
44.Lot Improvemen
45.Subdivision Lo
46.Heavy Ind Sit

Inspection Witnessed By:

X Date

No./Date	Description	Date Insp.

Notes:

Washburn

Washburn

Map Lot 010-008 | Account 477 | Location 106 HINES STREET | Card 1 Of 1 | 12/09/2022

Building Style	**4 Cape Cod**		
1.Conv.	5.Garrison	9.Gambrel	
2.Ranch	6.Salt Box	10.Other	
3.R Ranch	7.Contemp	11.Split	
4.Cape	8.Log	12.	
Dwelling Units	**1**		
Other Units	**0**		
Stories	**4 One & 1/2 Story**		
1.1	4.1.5	7.	
2.2	5.1.75	8.	
3.3	6.2.5	9.	
Exterior Walls	**2 Vinyl/Aluminum**		
1.Wood	5.Stucco	9.T-111	
2.Vin/Al	6.Brick	10.Other	
3.Compos.	7.Stone	11.	
4.Asbestos	8.Concrete	12.	
Roof Surface	**3 Sheet Metal**		
1.Asphalt	4.Composit	7.	
2.Slate	5.Wood	8.	
3.Metal	6.Other	9.	
SF Masonry Trim	**0**		
OPEN-3-CUSTOM	**0**		
OPEN-4-CUSTOM	**0**		
Year Built	**1910**		
Year Remodeled	**0**		
Foundation	**1 Concrete**		
1.Concrete	4.Wood	7.	
2.C Block	5.Slab	8.	
3.Br/Stone	6.Piers	9.	
Basement	**4 Full Basement**		
1.1/4 Bmt	4.Full Bmt	7.	
2.1/2 Bmt	5.None	8.	
3.3/4 Bmt	6.	9.None	
Bsmt Gar # Cars	**0**		
Wet Basement	**1 Dry Basement**		
1.Dry	4.	7.	
2.Damp	5.	8.	
3.Wet	6.	9.	

SF Bsmt Living	**0**		
Fin Bsmt Grade	**0 0**		
OPEN 5 OPTIONAL	**0**		
Heat Type	**100%**	**5 Forced Warm Air**	
1.HWBB	5.FWA	9.No Heat	
2.HWCI	6.GravWA	10.	
3.H Pump	7.Electric	11.	
4.Steam	8.Fl/Wall	12.	
Cool Type	**0%**	**9 None**	
1.Refrig	4.W&C Air	7.	
2.Evapor	5.	8.	
3.H Pump	6.	9.None	
Kitchen Style	**2 Typical**		
1.Modern	4.Obsolete	7.	
2.Typical	5.	8.	
3.Old Type	6.	9.None	
Bath(s) Style	**2 Typical Bath(s)**		
1.Modern	4.Obsolete	7.	
2.Typical	5.	8.	
3.Old Type	6.	9.None	
# Rooms	**5**		
# Bedrooms	**2**		
# Full Baths	**1**		
# Half Baths	**0**		
# Addn Fixtures	**0**		
# Fireplaces	**0**		

TRIO Software
A Division of Harris Computer Systems

Layout	**1 Typical**		
1.Typical	4.	7.	
2.Inadeq	5.	8.	
3.Poor	6.	9.	
Attic	**9 None**		
1.1/4 Fin	4.Full Fin	7.	
2.1/2 Fin	5.Fl/Stair	8.	
3.3/4 Fin	6.	9.None	
Insulation	**1 Full**		
1.Full	4.Minimal	7.	
2.Heavy	5.Partial	8.	
3.Capped	6.	9.None	
Unfinished %	**0%**		
Grade & Factor	**2 Fair 110%**		
1.E Grade	4.B Grade	7.	
2.D Grade	5.A Grade	8.SC Grade	
3.C Grade	6.AA Grade	9.Same	
SQFT (Footprint)	**420**		
Condition	**5 Above Average**		
1.Poor	4.Avg	7.V G	
2.Fair	5.Avg+	8.Exc	
3.Avg-	6.Good	9.Same	
Phys. % Good	**0%**		
Funct. % Good	**100%**		
Functional Code	**9 None**		
1.Incomp	4.Delap	7.No Power	
2.O-Built	5.Bsmt	8.LongTerm	
3.Damage	6.Common	9.None	
Econ. % Good	**100%**		
Economic Code	**None**		
0.None	3.No Power	7.	
1.Location	4.Generate	8.	
2.Encroach	9.None	9.	
Entrance Code	**3 Information Only**		
1.Interior	4.Vacant	7.	
2.Refusal	5.Estimate	8.	
3.Informed	6.Reviewed	9.	
Information Code	**1 Owner**		
1.Owner	4.Agent	7.	
2.Relative	5.Estimate	8.	
3.Tenant	6.Other	9.	

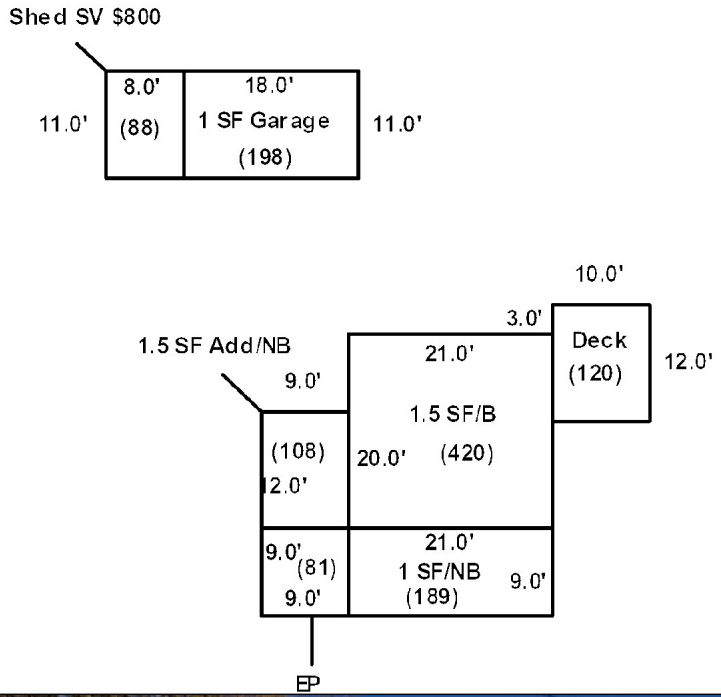

Date Inspected 10/01/2018

Additions, Outbuildings & Improvements

Type	Year	Units	Grade	Cond	Phys.	Funct.	Sound Value
22 Encl Frame Porch	2012	81	2 115	4	0 %	100 %	
4 1 & 1/2 Story Fr	1950	108	2 110	4	0 %	100 %	
1 One Story Frame	1950	182	2 115	5	0 %	100 %	
68 Wood Deck	1990	120	3 100	4	0 %	100 %	
23 Frame Garage	1920	198	2 110	4	0 %	100 %	
24 Frame Shed	0				%	%	800
					%	%	
					%	%	
					%	%	
					%	%	

1.One Story Fram
2.Two Story Fram
3.Three Story Fr
4.1 & 1/2 Story
5.1 & 3/4 Story
6.2 & 1/2 Story
21.Open Frame Por
22.Encl Frame Por
23.Frame Garage
24.Frame Shed
25.Frame Bay Wind
26.1SFr Overhang
27.Unfin Basement
28.Unfinished Att
29.Finished Attic

Map Lot 010-009 Account 199 Location 108 HINES STREET Card 1 Of 1 12/09/2022

CHURCHILL, WILLIAM JR
CHURCHILL, HELEN ELAINE
108 HINES STREET
WASHBURN ME 04786

B971P277 B3097P128

Property Data

Neighborhood **1 Neighborhood One**

Tree Growth Year **0**

1ST MORTGAGE **0**

2ND MORTGAGE **0**

Zone/Land Use **1 Residential**

Secondary Zone

Topography **1 Level**

1.Level	4.Below St	7.LevelBog
2.Rolling	5.Low	8.
3.Above St	6.Swampy	9.

Utilities **2 Public Water** **3 Public Sewer**

1.Public	4.Dr Well	7.Cesspool
2.Water	5.Dug Well	8.
3.Sewer	6.Septic	9.None

Street **1 Paved**

1.Paved	4.Proposed	7.
2.Semi Imp	5.R/O/W	8.
3.Gravel	6.	9.None

TG PLAN YEAR **0**

Tif District # **0**

Sale Data

Sale Date **4/20/1966**

Price

Sale Type **2 Land & Buildings**

1.Land	4.Mobile	7.C/I L&B
2.L & B	5.Other	8.
3.Building	6.C/I Land	9.

Financing **1 Conventional**

1.Convent	4.Seller	7.
2.FHA/VA	5.Private	8.
3.Assumed	6.Cash	9.Unknown

Validity **1 Arms Length Sale**

1.Valid	4.Split	7.Renovate
2.Related	5.Partial	8.Other
3.Distress	6.Exempt	9.

Verified **5 Public Record**

1.Buyer	4.Agent	7.Family
2.Seller	5.Pub Rec	8.Other
3.Lender	6.MLS	9.

Assessment Record

Year	Land	Buildings	Exempt	Total
2009	5,200	46,900	9,000	43,100
2012	5,200	46,900	8,800	43,300
2013	6,700	46,900	8,800	44,800
2015	6,700	46,900	9,000	44,600
2018	6,700	46,900	18,400	35,200
2019	12,300	52,100	20,000	44,400
2020	12,300	51,900	25,000	39,200
2021	12,300	52,100	25,000	39,400
2022	12,300	54,600	25,000	41,900

Land Data

Front Foot	Type	Effective Frontage	Effective Depth	Influence Factor	Influence Code
11.Regular Lot				%	
12.Delta Triangle				%	
13.Nabla Triangle				%	
14.Rear Land				%	
15.Class I Road				%	
				%	
				%	
Square Foot		**Square Feet**			
16.Class II Road	29	900		100 %	0
17.Municipal Rese				%	
18.Munic Sep Lago				%	
19.Gravel Pit				%	
20.Industrial Bas				%	
				%	
				%	
Fract. Acre		**Acreage/Sites**			
21.Developed Pave	21	0.37		100 %	0
22.Undev Paved (F				%	
23.Developed Grav				%	
Acres				%	
24.Undev Gravel (				%	
25.Comm Base Pave				%	
26.Comm Base Grav				%	
27.Backlot				%	
28.Rear Land				%	
29.Pavement				%	

Total Acreage 0.37

Influence Codes

1.Unimproved
2.Excess Frtg
3.Topography
4.Size/Shape
5.Access
6.Restriction
7.Open Space
8.View/Environ
9.Fract Share

Acres

30.Utility R O W
31.Tillable
32.Pasture
33.Orchard
34.Softwood F&O
35.Mixed Wood F&O
36.Hardwood F&O
37.Softwood TG
38.Mixed Wood TG
39.Hardwood TG
40.Wasteland
41.Open Space
42.Mobile Home Si
43.Condo Site
44.Lot Improvemen
45.Subdivision Lo
46.Heavy Ind Sit

Inspection Witnessed By:

X Date

No./Date	Description	Date Insp.

Notes:
*2-14-2019 -5% for attached garage.

Washburn

Washburn

Map Lot 010-009 | Account 199 | Location 108 HINES STREET | Card 1 Of 1 | 12/09/2022

Building Style	**4 Cape Cod**		
1.Conv.	5.Garrison	9.Gambrel	
2.Ranch	6.Salt Box	10.Other	
3.R Ranch	7.Contemp	11.Split	
4.Cape	8.Log	12.	
Dwelling Units	**1**		
Other Units	**0**		
Stories	**4 One & 1/2 Story**		
1.1	4.1.5	7.	
2.2	5.1.75	8.	
3.3	6.2.5	9.	
Exterior Walls	**2 Vinyl/Aluminum**		
1.Wood	5.Stucco	9.T-111	
2.Vin/Al	6.Brick	10.Other	
3.Compos.	7.Stone	11.	
4.Asbestos	8.Concrete	12.	
Roof Surface	**3 Sheet Metal**		
1.Asphalt	4.Composit	7.	
2.Slate	5.Wood	8.	
3.Metal	6.Other	9.	
SF Masonry Trim	**0**		
OPEN-3-CUSTOM	**0**		
OPEN-4-CUSTOM	**0**		
Year Built	**1942**		
Year Remodeled	**0**		
Foundation	**1 Concrete**		
1.Concrete	4.Wood	7.	
2.C Block	5.Slab	8.	
3.Br/Stone	6.Piers	9.	
Basement	**4 Full Basement**		
1.1/4 Bmt	4.Full Bmt	7.	
2.1/2 Bmt	5.None	8.	
3.3/4 Bmt	6.	9.None	
Bsmt Gar # Cars	**0**		
Wet Basement	**1 Dry Basement**		
1.Dry	4.	7.	
2.Damp	5.	8.	
3.Wet	6.	9.	

SF Bsmt Living	**0**		
Fin Bsmt Grade	**0 0**		
OPEN 5 OPTIONAL	**0**		
Heat Type	**100%**	**5 Forced Warm Air**	
1.HWBB	5.FWA	9.No Heat	
2.HWCI	6.GravWA	10.	
3.H Pump	7.Electric	11.	
4.Steam	8.Fl/Wall	12.	
Cool Type	**0%**	**9 None**	
1.Refrig	4.W&C Air	7.	
2.Evapor	5.	8.	
3.H Pump	6.	9.None	
Kitchen Style	**2 Typical**		
1.Modern	4.Obsolete	7.	
2.Typical	5.	8.	
3.Old Type	6.	9.None	
Bath(s) Style	**2 Typical Bath(s)**		
1.Modern	4.Obsolete	7.	
2.Typical	5.	8.	
3.Old Type	6.	9.None	
# Rooms	**6**		
# Bedrooms	**3**		
# Full Baths	**1**		
# Half Baths	**0**		
# Addn Fixtures	**0**		
# Fireplaces	**0**		

TRIO Software
A Division of Harris Computer Systems

Layout	**1 Typical**		
1.Typical	4.	7.	
2.Inadeq	5.	8.	
3.Poor	6.	9.	
Attic	**9 None**		
1.1/4 Fin	4.Full Fin	7.	
2.1/2 Fin	5.Fl/Stair	8.	
3.3/4 Fin	6.	9.None	
Insulation	**1 Full**		
1.Full	4.Minimal	7.	
2.Heavy	5.Partial	8.	
3.Capped	6.	9.None	
Unfinished %	**0%**		
Grade & Factor	**2 Fair 110%**		
1.E Grade	4.B Grade	7.	
2.D Grade	5.A Grade	8.SC Grade	
3.C Grade	6.AA Grade	9.Same	
SQFT (Footprint)	**624**		
Condition	**6 Good**		
1.Poor	4.Avg	7.V G	
2.Fair	5.Avg+	8.Exc	
3.Avg-	6.Good	9.Same	
Phys. % Good	**0%**		
Funct. % Good	**100%**		
Functional Code	**9 None**		
1.Incomp	4.Delap	7.No Power	
2.O-Built	5.Bsmt	8.LongTerm	
3.Damage	6.Common	9.None	
Econ. % Good	**100%**		
Economic Code	**None**		
0.None	3.No Power	7.	
1.Location	4.Generate	8.	
2.Encroach	9.None	9.	
Entrance Code	**1 Interior Inspect**		
1.Interior	4.Vacant	7.	
2.Refusal	5.Estimate	8.	
3.Informed	6.Reviewed	9.	
Information Code	**1 Owner**		
1.Owner	4.Agent	7.	
2.Relative	5.Estimate	8.	
3.Tenant	6.Other	9.	

Date Inspected 10/01/2018

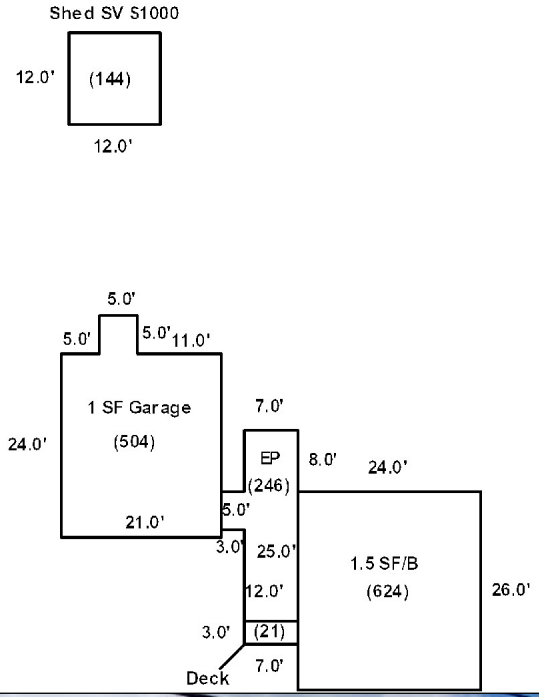

Additions, Outbuildings & Improvements

Type	Year	Units	Grade	Cond	Phys.	Funct.	Sound Value
68 Wood Deck	1990	21	3 100	3	0 %	100 %	
22 Encl Frame Porch	1950	246	2 110	4	0 %	100 %	
23 Frame Garage	1950	504	3 100	4	0 %	95 %	
24 Frame Shed	0				%	%	1,000
					%	%	
					%	%	
					%	%	
					%	%	
					%	%	
					%	%	

1.One Story Fram
2.Two Story Fram
3.Three Story Fr
4.1 & 1/2 Story
5.1 & 3/4 Story
6.2 & 1/2 Story
21.Open Frame Por
22.Encl Frame Por
23.Frame Garage
24.Frame Shed
25.Frame Bay Wind
26.1SFr Overhang
27.Unfin Basement
28.Unfinished Att
29.Finished Attic

Map Lot 010-010 | Account 878 | Location 112 HINES STREET | Card 1 Of 1 | 12/09/2022

LaFAVE, CHRISTOPHER A
LaFAVE, JESSICA L
P.O. BOX 929
PRESQUE ISLE ME 04769

B5470P23 B5477P250

Previous Owner
KINNEY, PAUL E.
KINNEY, LAURIE A.
135 ACADEMY STREET
PRESQUE ISLE ME 04769
Sale Date: 9/10/2015

Previous Owner
DOBBS, FREDERICK W.
DOBBS, LISA J.
344 VAN BUREN ROAD
CARIBOU ME 04736
Sale Date: 9/30/2014

Previous Owner
SNOWMAN, DONNA
WATSON, JUNE
PADGETT, GAYNOL
ORRINGTON ME 04474
Sale Date: 5/28/2014

Inspection Witnessed By:

X Date

No./Date	Description	Date Insp.

Notes:

Washburn

Property Data

Neighborhood **1 Neighborhood One**

Tree Growth Year **0**

1ST MORTGAGE **0**

2ND MORTGAGE **0**

Zone/Land Use **1 Residential**

Secondary Zone

Topography **1 Level**

1.Level	4.Below St	7.LevelBog
2.Rolling	5.Low	8.
3.Above St	6.Swampy	9.

Utilities **2 Public Water** **3 Public Sewer**

1.Public	4.Dr Well	7.Cesspool
2.Water	5.Dug Well	8.
3.Sewer	6.Septic	9.None

Street **1 Paved**

1.Paved	4.Proposed	7.
2.Semi Imp	5.R/O/W	8.
3.Gravel	6.	9.None

TG PLAN YEAR **0**

Tif District # **0**

Sale Data

Sale Date **9/10/2015**

Price **57,000**

Sale Type **2 Land & Buildings**

1.Land	4.Mobile	7.C/I L&B
2.L & B	5.Other	8.
3.Building	6.C/I Land	9.

Financing **1 Conventional**

1.Convent	4.Seller	7.
2.FHA/VA	5.Private	8.
3.Assumed	6.Cash	9.Unknown

Validity **1 Arms Length Sale**

1.Valid	4.Split	7.Renovate
2.Related	5.Partial	8.Other
3.Distress	6.Exempt	9.

Verified **5 Public Record**

1.Buyer	4.Agent	7.Family
2.Seller	5.Pub Rec	8.Other
3.Lender	6.MLS	9.

Assessment Record

Year	Land	Buildings	Exempt	Total
2009	4,900	37,300	14,400	27,800
2012	4,900	37,300	14,080	28,120
2013	6,400	37,300	0	43,700
2015	6,400	37,300	0	43,700
2018	6,400	37,300	18,400	25,300
2019	12,600	56,000	20,000	48,600
2020	12,600	55,900	25,000	43,500
2021	12,600	56,000	25,000	43,600
2022	12,600	58,800	25,000	46,400

Land Data

Front Foot	Type	Effective Frontage	Effective Depth	Influence Factor	Influence Code
11.Regular Lot				%	
12.Delta Triangle				%	
13.Nabla Triangle				%	
14.Rear Land				%	
15.Class I Road				%	
				%	
				%	
Square Foot		**Square Feet**			
16.Class II Road	29	1,200		100 %	0
17.Municipal Rese				%	
18.Munic Sep Lago				%	
19.Gravel Pit				%	
20.Industrial Bas				%	
				%	
				%	
Fract. Acre		**Acreage/Sites**			
21.Developed Pave	21	0.34		100 %	0
22.Undev Paved (F				%	
23.Developed Grav				%	
Acres				%	
24.Undev Gravel (				%	
25.Comm Base Pave				%	
26.Comm Base Grav				%	
27.Backlot				%	
28.Rear Land				%	
29.Pavement				%	

Total Acreage 0.34

Influence Codes

1.Unimproved
2.Excess Frtg
3.Topography
4.Size/Shape
5.Access
6.Restriction
7.Open Space
8.View/Environ
9.Fract Share
Acres
30.Utility R O W
31.Tillable
32.Pasture
33.Orchard
34.Softwood F&O
35.Mixed Wood F&O
36.Hardwood F&O
37.Softwood TG
38.Mixed Wood TG
39.Hardwood TG
40.Wasteland
41.Open Space
42.Mobile Home Si
43.Condo Site
44.Lot Improvemen
45.Subdivision Lo
46.Heavy Ind Sit

Washburn

Map Lot 010-010 | Account 878 | Location 112 HINES STREET | Card 1 Of 1 | 12/09/2022

Building Style	**4 Cape Cod**		
1.Conv.	5.Garrison	9.Gambrel	
2.Ranch	6.Salt Box	10.Other	
3.R Ranch	7.Contemp	11.Split	
4.Cape	8.Log	12.	
Dwelling Units	**1**		
Other Units	**0**		
Stories	**4 One & 1/2 Story**		
1.1	4.1.5	7.	
2.2	5.1.75	8.	
3.3	6.2.5	9.	
Exterior Walls	**2 Vinyl/Aluminum**		
1.Wood	5.Stucco	9.T-111	
2.Vin/Al	6.Brick	10.Other	
3.Compos.	7.Stone	11.	
4.Asbestos	8.Concrete	12.	
Roof Surface	**3 Sheet Metal**		
1.Asphalt	4.Composit	7.	
2.Slate	5.Wood	8.	
3.Metal	6.Other	9.	
SF Masonry Trim	**0**		
OPEN-3-CUSTOM	**0**		
OPEN-4-CUSTOM	**0**		
Year Built	**1940**		
Year Remodeled	**0**		
Foundation	**1 Concrete**		
1.Concrete	4.Wood	7.	
2.C Block	5.Slab	8.	
3.Br/Stone	6.Piers	9.	
Basement	**4 Full Basement**		
1.1/4 Bmt	4.Full Bmt	7.	
2.1/2 Bmt	5.None	8.	
3.3/4 Bmt	6.	9.None	
Bsmt Gar # Cars	**0**		
Wet Basement	**1 Dry Basement**		
1.Dry	4.	7.	
2.Damp	5.	8.	
3.Wet	6.	9.	

SF Bsmt Living	**0**		
Fin Bsmt Grade	**0 0**		
OPEN 5 OPTIONAL	**0**		
Heat Type	**100%**	**1 Hot Water BB**	
1.HWBB	5.FWA	9.No Heat	
2.HWCI	6.GravWA	10.	
3.H Pump	7.Electric	11.	
4.Steam	8.Fl/Wall	12.	
Cool Type	**0%**	**9 None**	
1.Refrig	4.W&C Air	7.	
2.Evapor	5.	8.	
3.H Pump	6.	9.None	
Kitchen Style	**2 Typical**		
1.Modern	4.Obsolete	7.	
2.Typical	5.	8.	
3.Old Type	6.	9.None	
Bath(s) Style	**2 Typical Bath(s)**		
1.Modern	4.Obsolete	7.	
2.Typical	5.	8.	
3.Old Type	6.	9.None	
# Rooms	**6**		
# Bedrooms	**3**		
# Full Baths	**1**		
# Half Baths	**0**		
# Addn Fixtures	**0**		
# Fireplaces	**0**		

TRIO Software
A Division of Harris Computer Systems

Layout	**1 Typical**		
1.Typical	4.	7.	
2.Inadeq	5.	8.	
3.Poor	6.	9.	
Attic	**9 None**		
1.1/4 Fin	4.Full Fin	7.	
2.1/2 Fin	5.Fl/Stair	8.	
3.3/4 Fin	6.	9.None	
Insulation	**1 Full**		
1.Full	4.Minimal	7.	
2.Heavy	5.Partial	8.	
3.Capped	6.	9.None	
Unfinished %	**0%**		
Grade & Factor	**2 Fair 110%**		
1.E Grade	4.B Grade	7.	
2.D Grade	5.A Grade	8.SC Grade	
3.C Grade	6.AA Grade	9.Same	
SQFT (Footprint)	**624**		
Condition	**6 Good**		
1.Poor	4.Avg	7.V G	
2.Fair	5.Avg+	8.Exc	
3.Avg-	6.Good	9.Same	
Phys. % Good	**0%**		
Funct. % Good	**100%**		
Functional Code	**9 None**		
1.Incomp	4.Delap	7.No Power	
2.O-Built	5.Bsmt	8.LongTerm	
3.Damage	6.Common	9.None	
Econ. % Good	**100%**		
Economic Code	**None**		
0.None	3.No Power	7.	
1.Location	4.Generate	8.	
2.Encroach	9.None	9.	
Entrance Code	**1 Interior Inspect**		
1.Interior	4.Vacant	7.	
2.Refusal	5.Estimate	8.	
3.Informed	6.Reviewed	9.	
Information Code	**1 Owner**		
1.Owner	4.Agent	7.	
2.Relative	5.Estimate	8.	
3.Tenant	6.Other	9.	

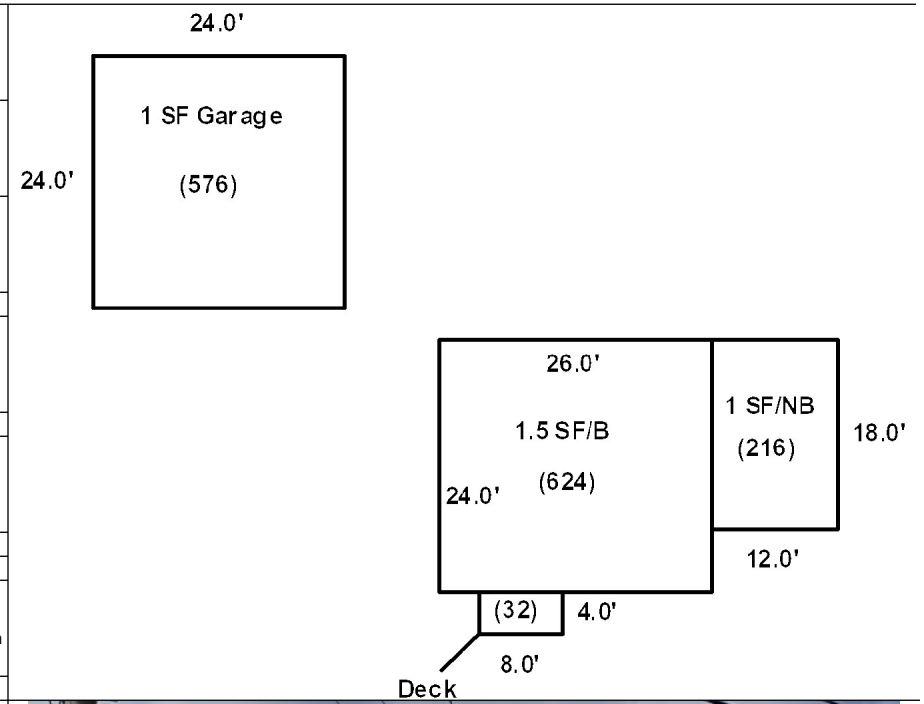

Date Inspected 10/01/2018

Additions, Outbuildings & Improvements

Type	Year	Units	Grade	Cond	Phys.	Funct.	Sound Value
1 One Story Frame	1940	216	9 100	9	0 %	100 %	
68 Wood Deck	1980	32	3 100	4	0 %	100 %	
23 Frame Garage	1950	576	3 100	4	0 %	100 %	
					%	%	
					%	%	
					%	%	
					%	%	
					%	%	
					%	%	
					%	%	

1.One Story Fram
2.Two Story Fram
3.Three Story Fr
4.1 & 1/2 Story
5.1 & 3/4 Story
6.2 & 1/2 Story
21.Open Frame Por
22.Encl Frame Por
23.Frame Garage
24.Frame Shed
25.Frame Bay Wind
26.1SFr Overhang
27.Unfin Basement
28.Unfinished Att
29.Finished Attic

Map Lot 010-011 | Account 339 | Location 116 HINES STREET | Card 1 Of 1 | 12/09/2022

PUCCIO, LISA A
PUCCIO, JOHN
116 Hines Street
Washburn ME 04786

B6190P306

Previous Owner
DOEBENER, CAMILLE E (NICHOLS)
P.O. BOX 427

WASHBURN ME 04786
Sale Date: 7/02/2021

Inspection Witnessed By:

X Date

No./Date	Description	Date Insp.

Notes:

Washburn

Property Data

Neighborhood **1 Neighborhood One**

Tree Growth Year **0**

1ST MORTGAGE **0**

2ND MORTGAGE **0**

Zone/Land Use **1 Residential**

Secondary Zone

Topography **1 Level**

1.Level	4.Below St	7.LevelBog
2.Rolling	5.Low	8.
3.Above St	6.Swampy	9.

Utilities **2 Public Water** **3 Public Sewer**

1.Public	4.Dr Well	7.Cesspool
2.Water	5.Dug Well	8.
3.Sewer	6.Septic	9.None

Street **1 Paved**

1.Paved	4.Proposed	7.
2.Semi Imp	5.R/O/W	8.
3.Gravel	6.	9.None

TG PLAN YEAR **0**

Tif District # **0**

Sale Data

Sale Date **7/02/2021**

Price **69,000**

Sale Type **2 Land & Buildings**

1.Land	4.Mobile	7.C/I L&B
2.L & B	5.Other	8.
3.Building	6.C/I Land	9.

Financing **1 Conventional**

1.Convent	4.Seller	7.
2.FHA/VA	5.Private	8.
3.Assumed	6.Cash	9.Unknown

Validity **1 Arms Length Sale**

1.Valid	4.Split	7.Renovate
2.Related	5.Partial	8.Other
3.Distress	6.Exempt	9.

Verified **5 Public Record**

1.Buyer	4.Agent	7.Family
2.Seller	5.Pub Rec	8.Other
3.Lender	6.MLS	9.

Assessment Record

Year	Land	Buildings	Exempt	Total
2009	4,100	26,800	9,000	21,900
2012	4,100	26,800	8,800	22,100
2013	5,300	26,800	8,800	23,300
2015	5,300	26,800	9,000	23,100
2018	5,300	26,800	18,400	13,700
2019	8,700	40,300	20,000	29,000
2020	8,700	40,200	25,000	23,900
2021	8,700	40,300	25,000	24,000
2022	8,700	42,200	0	50,900

Land Data

Front Foot	Type	Effective Frontage	Effective Depth	Influence Factor	Influence Code
11.Regular Lot				%	
12.Delta Triangle				%	
13.Nabla Triangle				%	
14.Rear Land				%	
15.Class I Road				%	
				%	
				%	
Square Foot		**Square Feet**			
16.Class II Road				%	
17.Municipal Rese				%	
18.Munic Sep Lago				%	
19.Gravel Pit				%	
20.Industrial Bas				%	
				%	
				%	
Fract. Acre		**Acreage/Sites**			
21.Developed Pave	21	0.28		100 %	0
22.Undev Paved (F				%	
23.Developed Grav				%	
Acres				%	
24.Undev Gravel (				%	
25.Comm Base Pave				%	
26.Comm Base Grav				%	
27.Backlot				%	
28.Rear Land				%	
29.Pavement				%	

Total Acreage 0.28

Influence Codes

1.Unimproved
2.Excess Frtg
3.Topography
4.Size/Shape
5.Access
6.Restriction
7.Open Space
8.View/Environ
9.Fract Share
Acres
30.Utility R O W
31.Tillable
32.Pasture
33.Orchard
34.Softwood F&O
35.Mixed Wood F&O
36.Hardwood F&O
37.Softwood TG
38.Mixed Wood TG
39.Hardwood TG
40.Wasteland
41.Open Space
42.Mobile Home Si
43.Condo Site
44.Lot Improvemen
45.Subdivision Lo
46.Heavy Ind Sit

Washburn

Map Lot 010-011 | Account 339 | Location 116 HINES STREET | Card 1 Of 1 | 12/09/2022

Building Style	**2 Ranch**		
1.Conv.	5.Garrison	9.Gambrel	
2.Ranch	6.Salt Box	10.Other	
3.R Ranch	7.Contemp	11.Split	
4.Cape	8.Log	12.	
Dwelling Units	**1**		
Other Units	**0**		
Stories	**1 One Story**		
1.1	4.1.5	7.	
2.2	5.1.75	8.	
3.3	6.2.5	9.	
Exterior Walls	**1 Wood Siding**		
1.Wood	5.Stucco	9.T-111	
2.Vin/Al	6.Brick	10.Other	
3.Compos.	7.Stone	11.	
4.Asbestos	8.Concrete	12.	
Roof Surface	**1 Asphalt Shingles**		
1.Asphalt	4.Composit	7.	
2.Slate	5.Wood	8.	
3.Metal	6.Other	9.	
SF Masonry Trim	**0**		
OPEN-3-CUSTOM	**0**		
OPEN-4-CUSTOM	**0**		
Year Built	**1950**		
Year Remodeled	**0**		
Foundation	**1 Concrete**		
1.Concrete	4.Wood	7.	
2.C Block	5.Slab	8.	
3.Br/Stone	6.Piers	9.	
Basement	**2 1/2 Basement**		
1.1/4 Bmt	4.Full Bmt	7.	
2.1/2 Bmt	5.None	8.	
3.3/4 Bmt	6.	9.None	
Bsmt Gar # Cars	**0**		
Wet Basement	**1 Dry Basement**		
1.Dry	4.	7.	
2.Damp	5.	8.	
3.Wet	6.	9.	

SF Bsmt Living	**0**		
Fin Bsmt Grade	**0 0**		
OPEN 5 OPTIONAL	**0**		
Heat Type	**100%**	**1 Hot Water BB**	
1.HWBB	5.FWA	9.No Heat	
2.HWCI	6.GravWA	10.	
3.H Pump	7.Electric	11.	
4.Steam	8.Fl/Wall	12.	
Cool Type	**0%**	**9 None**	
1.Refrig	4.W&C Air	7.	
2.Evapor	5.	8.	
3.H Pump	6.	9.None	
Kitchen Style	**2 Typical**		
1.Modern	4.Obsolete	7.	
2.Typical	5.	8.	
3.Old Type	6.	9.None	
Bath(s) Style	**2 Typical Bath(s)**		
1.Modern	4.Obsolete	7.	
2.Typical	5.	8.	
3.Old Type	6.	9.None	
# Rooms	**5**		
# Bedrooms	**2**		
# Full Baths	**1**		
# Half Baths	**0**		
# Addn Fixtures	**0**		
# Fireplaces	**0**		

TRIO Software
A Division of Harris Computer Systems

Layout	**1 Typical**		
1.Typical	4.	7.	
2.Inadeq	5.	8.	
3.Poor	6.	9.	
Attic	**9 None**		
1.1/4 Fin	4.Full Fin	7.	
2.1/2 Fin	5.Fl/Stair	8.	
3.3/4 Fin	6.	9.None	
Insulation	**1 Full**		
1.Full	4.Minimal	7.	
2.Heavy	5.Partial	8.	
3.Capped	6.	9.None	
Unfinished %	**0%**		
Grade & Factor	**3 Average 95%**		
1.E Grade	4.B Grade	7.	
2.D Grade	5.A Grade	8.SC Grade	
3.C Grade	6.AA Grade	9.Same	
SQFT (Footprint)	**616**		
Condition	**5 Above Average**		
1.Poor	4.Avg	7.V G	
2.Fair	5.Avg+	8.Exc	
3.Avg-	6.Good	9.Same	
Phys. % Good	**0%**		
Funct. % Good	**100%**		
Functional Code	**9 None**		
1.Incomp	4.Delap	7.No Power	
2.O-Built	5.Bsmt	8.LongTerm	
3.Damage	6.Common	9.None	
Econ. % Good	**100%**		
Economic Code	**None**		
0.None	3.No Power	7.	
1.Location	4.Generate	8.	
2.Encroach	9.None	9.	
Entrance Code	**5 Estimated**		
1.Interior	4.Vacant	7.	
2.Refusal	5.Estimate	8.	
3.Informed	6.Reviewed	9.	
Information Code	**5 Estimate**		
1.Owner	4.Agent	7.	
2.Relative	5.Estimate	8.	
3.Tenant	6.Other	9.	

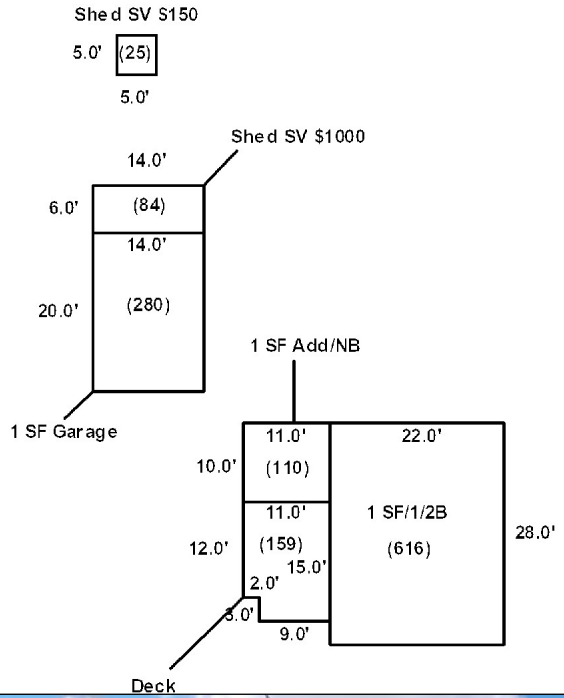

Date Inspected 10/01/2018

Additions, Outbuildings & Improvements

Type	Year	Units	Grade	Cond	Phys.	Funct.	Sound Value
68 Wood Deck	2000	159	2 105	4	0 %	100 %	
1 One Story Frame	1965	110	2 115	4	0 %	100 %	
23 Frame Garage	1965	280	2 110	4	0 %	100 %	
24 Frame Shed	0				%	%	1,000
24 Frame Shed	0				%	%	150
					%	%	
					%	%	
					%	%	
					%	%	
					%	%	

1.One Story Fram
2.Two Story Fram
3.Three Story Fr
4.1 & 1/2 Story
5.1 & 3/4 Story
6.2 & 1/2 Story
21.Open Frame Por
22.Encl Frame Por
23.Frame Garage
24.Frame Shed
25.Frame Bay Wind
26.1SFr Overhang
27.Unfin Basement
28.Unfinished Att
29.Finished Attic

Map Lot 010-014 Account 768 Location 126 HINES STREET Card 1 Of 1 12/09/2022

MILLS, PHILIP L
MILLS, KATHLEEN S
PO BOX 292
WASHBURN ME 04786

B6302P141

Inspection Witnessed By:

X Date

No./Date	Description	Date Insp.

Notes:

* Bk 6302 Pg 141 Combined Lots 010-012, 013 and 014. Going forward all lots will be combined and listed at 010-014 - JB

Washburn

Property Data

Neighborhood **1 Neighborhood One**

Tree Growth Year **0**

1ST MORTGAGE **0**

2ND MORTGAGE **0**

Zone/Land Use **1 Residential**

Secondary Zone

Topography **1 Level**

1.Level	4.Below St	7.LevelBog
2.Rolling	5.Low	8.
3.Above St	6.Swampy	9.

Utilities **2 Public Water** **3 Public Sewer**

1.Public	4.Dr Well	7.Cesspool
2.Water	5.Dug Well	8.
3.Sewer	6.Septic	9.None

Street **1 Paved**

1.Paved	4.Proposed	7.
2.Semi Imp	5.R/O/W	8.
3.Gravel	6.	9.None

TG PLAN YEAR **0**

Tif District # **0**

Sale Data

Sale Date **6/01/1987**

Price **30,000**

Sale Type **2 Land & Buildings**

1.Land	4.Mobile	7.C/I L&B
2.L & B	5.Other	8.
3.Building	6.C/I Land	9.

Financing **1 Conventional**

1.Convent	4.Seller	7.
2.FHA/VA	5.Private	8.
3.Assumed	6.Cash	9.Unknown

Validity **1 Arms Length Sale**

1.Valid	4.Split	7.Renovate
2.Related	5.Partial	8.Other
3.Distress	6.Exempt	9.

Verified **5 Public Record**

1.Buyer	4.Agent	7.Family
2.Seller	5.Pub Rec	8.Other
3.Lender	6.MLS	9.

Assessment Record

Year	Land	Buildings	Exempt	Total
2009	4,100	68,400	9,000	63,500
2012	4,100	68,400	8,800	63,700
2013	5,300	68,400	8,800	64,900
2015	5,300	68,400	9,000	64,700
2018	5,300	68,400	18,400	55,300
2019	13,700	80,600	20,000	74,300
2020	13,700	80,600	25,000	69,300
2021	13,700	80,600	25,000	69,300
2022	20,100	90,800	25,000	85,900

Land Data

Front Foot	Type	Effective Frontage	Effective Depth	Influence Factor	Influence Code
11.Regular Lot				%	
12.Delta Triangle				%	
13.Nabla Triangle				%	
14.Rear Land				%	
15.Class I Road				%	
				%	
				%	
Square Foot		**Square Feet**			
16.Class II Road	29	2,000		100 %	0
17.Municipal Rese				%	
18.Munic Sep Lago				%	
19.Gravel Pit				%	
20.Industrial Bas				%	
				%	
				%	
Fract. Acre		**Acreage/Sites**			
21.Developed Pave	21	0.84		100 %	0
22.Undev Paved (F				%	
23.Developed Grav				%	
Acres				%	
24.Undev Gravel (				%	
25.Comm Base Pave				%	
26.Comm Base Grav				%	
27.Backlot				%	
28.Rear Land				%	
29.Pavement				%	

Total Acreage 0.84

Influence Codes

1.Unimproved
2.Excess Frtg
3.Topography
4.Size/Shape
5.Access
6.Restriction
7.Open Space
8.View/Environ
9.Fract Share

Acres

30.Utility R O W
31.Tillable
32.Pasture
33.Orchard
34.Softwood F&O
35.Mixed Wood F&O
36.Hardwood F&O
37.Softwood TG
38.Mixed Wood TG
39.Hardwood TG
40.Wasteland
41.Open Space
42.Mobile Home Si
43.Condo Site
44.Lot Improvemen
45.Subdivision Lo
46.Heavy Ind Sit

Washburn

Map Lot 010-014 | Account 768 | Location 126 HINES STREET | Card 1 Of 1 | 12/09/2022

Building Style	**4 Cape Cod**		
1.Conv.	5.Garrison	9.Gambrel	
2.Ranch	6.Salt Box	10.Other	
3.R Ranch	7.Contemp	11.Split	
4.Cape	8.Log	12.	
Dwelling Units	**1**		
Other Units	**0**		
Stories	**4 One & 1/2 Story**		
1.1	4.1.5	7.	
2.2	5.1.75	8.	
3.3	6.2.5	9.	
Exterior Walls	**1 Wood Siding**		
1.Wood	5.Stucco	9.T-111	
2.Vin/Al	6.Brick	10.Other	
3.Compos.	7.Stone	11.	
4.Asbestos	8.Concrete	12.	
Roof Surface	**1 Asphalt Shingles**		
1.Asphalt	4.Composit	7.	
2.Slate	5.Wood	8.	
3.Metal	6.Other	9.	
SF Masonry Trim	**0**		
OPEN-3-CUSTOM	**0**		
OPEN-4-CUSTOM	**0**		
Year Built	**1950**		
Year Remodeled	**0**		
Foundation	**1 Concrete**		
1.Concrete	4.Wood	7.	
2.C Block	5.Slab	8.	
3.Br/Stone	6.Piers	9.	
Basement	**4 Full Basement**		
1.1/4 Bmt	4.Full Bmt	7.	
2.1/2 Bmt	5.None	8.	
3.3/4 Bmt	6.	9.None	
Bsmt Gar # Cars	**0**		
Wet Basement	**1 Dry Basement**		
1.Dry	4.	7.	
2.Damp	5.	8.	
3.Wet	6.	9.	

SF Bsmt Living	**0**		
Fin Bsmt Grade	**0 0**		
OPEN 5 OPTIONAL	**0**		
Heat Type	**100%**	**1 Hot Water BB**	
1.HWBB	5.FWA	9.No Heat	
2.HWCI	6.GravWA	10.	
3.H Pump	7.Electric	11.	
4.Steam	8.Fl/Wall	12.	
Cool Type	**0%**	**9 None**	
1.Refrig	4.W&C Air	7.	
2.Evapor	5.	8.	
3.H Pump	6.	9.None	
Kitchen Style	**2 Typical**		
1.Modern	4.Obsolete	7.	
2.Typical	5.	8.	
3.Old Type	6.	9.None	
Bath(s) Style	**2 Typical Bath(s)**		
1.Modern	4.Obsolete	7.	
2.Typical	5.	8.	
3.Old Type	6.	9.None	
# Rooms	**6**		
# Bedrooms	**3**		
# Full Baths	**2**		
# Half Baths	**0**		
# Addn Fixtures	**0**		
# Fireplaces	**0**		

TRIO Software
A Division of Harris Computer Systems

Layout	**1 Typical**		
1.Typical	4.	7.	
2.Inadeq	5.	8.	
3.Poor	6.	9.	
Attic	**9 None**		
1.1/4 Fin	4.Full Fin	7.	
2.1/2 Fin	5.Fl/Stair	8.	
3.3/4 Fin	6.	9.None	
Insulation	**1 Full**		
1.Full	4.Minimal	7.	
2.Heavy	5.Partial	8.	
3.Capped	6.	9.None	
Unfinished %	**0%**		
Grade & Factor	**2 Fair 110%**		
1.E Grade	4.B Grade	7.	
2.D Grade	5.A Grade	8.SC Grade	
3.C Grade	6.AA Grade	9.Same	
SQFT (Footprint)	**660**		
Condition	**6 Good**		
1.Poor	4.Avg	7.V G	
2.Fair	5.Avg+	8.Exc	
3.Avg-	6.Good	9.Same	
Phys. % Good	**0%**		
Funct. % Good	**100%**		
Functional Code	**9 None**		
1.Incomp	4.Delap	7.No Power	
2.O-Built	5.Bsmt	8.LongTerm	
3.Damage	6.Common	9.None	
Econ. % Good	**100%**		
Economic Code	**None**		
0.None	3.No Power	7.	
1.Location	4.Generate	8.	
2.Encroach	9.None	9.	
Entrance Code	**5 Estimated**		
1.Interior	4.Vacant	7.	
2.Refusal	5.Estimate	8.	
3.Informed	6.Reviewed	9.	
Information Code	**5 Estimate**		
1.Owner	4.Agent	7.	
2.Relative	5.Estimate	8.	
3.Tenant	6.Other	9.	

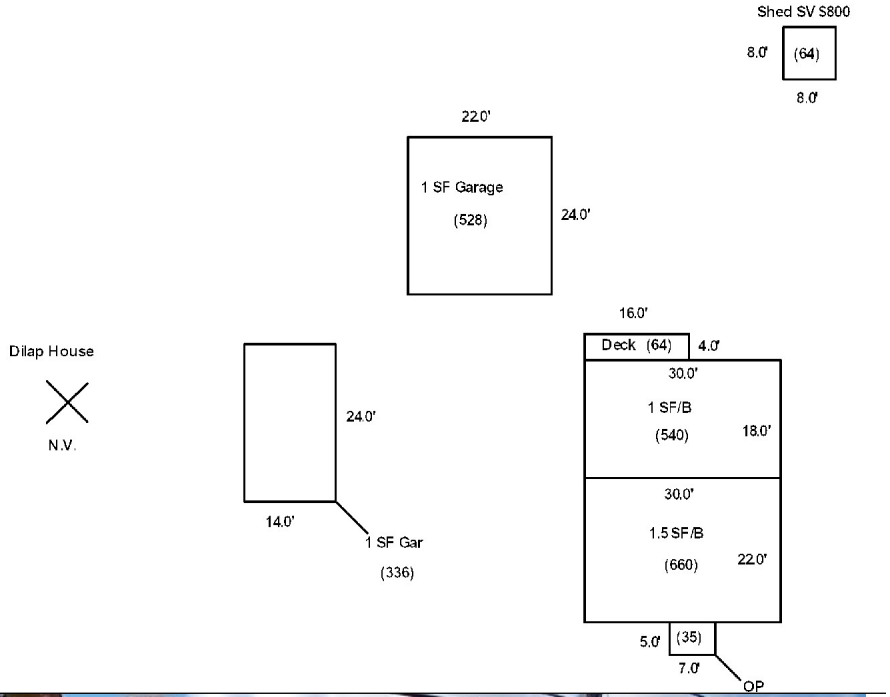

Date Inspected 10/01/2018

Additions, Outbuildings & Improvements

Type	Year	Units	Grade	Cond	Phys.	Funct.	Sound Value
21 Open Frame	1980	35	2 115	4	0 %	100 %	
20 1 Story/Bsmt	1950	540	9 100	9	0 %	100 %	
68 Wood Deck	2000	64	3 100	4	0 %	100 %	
23 Frame Garage	1965	528	3 95	5	0 %	100 %	
24 Frame Shed	0				%	%	800
23 Frame Garage	2000	336	3 95	4	0 %	100 %	
					%	%	
					%	%	
					%	%	
					%	%	

1.One Story Fram
2.Two Story Fram
3.Three Story Fr
4.1 & 1/2 Story
5.1 & 3/4 Story
6.2 & 1/2 Story
21.Open Frame Por
22.Encl Frame Por
23.Frame Garage
24.Frame Shed
25.Frame Bay Wind
26.1SFr Overhang
27.Unfin Basement
28.Unfinished Att
29.Finished Attic

Map Lot 010-015 Account 218 Location 130 HINES STREET Card 1 Of 1 12/09/2022

CLAYTON, ROBERT D
CLATYON, BRENDA J. & CLAYTON, DWIGHT
130 HINES ST
WASHBURN ME 04786

B5935P297

Property Data

Neighborhood **1 Neighborhood One**

Tree Growth Year **0**

1ST MORTGAGE **0**

2ND MORTGAGE **0**

Zone/Land Use **1 Residential**

Secondary Zone

Topography **1 Level**

1.Level	4.Below St	7.LevelBog
2.Rolling	5.Low	8.
3.Above St	6.Swampy	9.

Utilities **2 Public Water** **3 Public Sewer**

1.Public	4.Dr Well	7.Cesspool
2.Water	5.Dug Well	8.
3.Sewer	6.Septic	9.None

Street **1 Paved**

1.Paved	4.Proposed	7.
2.Semi Imp	5.R/O/W	8.
3.Gravel	6.	9.None

TG PLAN YEAR **0**

Tif District # **0**

Sale Data

Sale Date **10/02/1972**

Price

Sale Type **2 Land & Buildings**

1.Land	4.Mobile	7.C/I L&B
2.L & B	5.Other	8.
3.Building	6.C/I Land	9.

Financing

1.Convent	4.Seller	7.
2.FHA/VA	5.Private	8.
3.Assumed	6.Cash	9.Unknown

Validity **3 Distressed Sale**

1.Valid	4.Split	7.Renovate
2.Related	5.Partial	8.Other
3.Distress	6.Exempt	9.

Verified **5 Public Record**

1.Buyer	4.Agent	7.Family
2.Seller	5.Pub Rec	8.Other
3.Lender	6.MLS	9.

Assessment Record

Year	Land	Buildings	Exempt	Total
2009	4,100	68,300	9,000	63,400
2012	4,100	68,300	8,800	63,600
2013	5,300	68,300	8,800	64,800
2015	5,300	68,300	9,000	64,600
2018	5,300	68,300	18,400	55,200
2019	11,500	85,600	20,000	77,100
2020	11,500	85,600	25,000	72,100
2021	11,500	85,600	25,000	72,100
2022	11,500	89,900	25,000	76,400

Land Data

Front Foot	Type	Effective Frontage	Effective Depth	Influence Factor	Influence Code
11.Regular Lot				%	
12.Delta Triangle				%	
13.Nabla Triangle				%	
14.Rear Land				%	
15.Class I Road				%	
				%	
				%	
Square Foot		**Square Feet**			
16.Class II Road	29	1,500		75 %	0
17.Municipal Rese				%	
18.Munic Sep Lago				%	
19.Gravel Pit				%	
20.Industrial Bas				%	
				%	
				%	
Fract. Acre		**Acreage/Sites**			
21.Developed Pave	21	0.28		100 %	0
22.Undev Paved (F				%	
23.Developed Grav				%	
Acres				%	
24.Undev Gravel (				%	
25.Comm Base Pave				%	
26.Comm Base Grav				%	
27.Backlot				%	
28.Rear Land				%	
29.Pavement				%	

Total Acreage 0.28

Influence Codes

1.Unimproved
2.Excess Frtg
3.Topography
4.Size/Shape
5.Access
6.Restriction
7.Open Space
8.View/Environ
9.Fract Share

Acres

30.Utility R O W
31.Tillable
32.Pasture
33.Orchard
34.Softwood F&O
35.Mixed Wood F&O
36.Hardwood F&O
37.Softwood TG
38.Mixed Wood TG
39.Hardwood TG
40.Wasteland
41.Open Space
42.Mobile Home Si
43.Condo Site
44.Lot Improvemen
45.Subdivision Lo
46.Heavy Ind Sit

Inspection Witnessed By:

X Date

No./Date	Description	Date Insp.

Notes:

*Low roof pitch-Utilize Finished Attic for pricing

Washburn

Washburn

Map Lot 010-015 | Account 218 | Location 130 HINES STREET | Card 1 Of 1 | 12/09/2022

Building Style	**4 Cape Cod**		
1.Conv.	5.Garrison	9.Gambrel	
2.Ranch	6.Salt Box	10.Other	
3.R Ranch	7.Contemp	11.Split	
4.Cape	8.Log	12.	
Dwelling Units	**1**		
Other Units	**0**		
Stories	**1 One Story**		
1.1	4.1.5	7.	
2.2	5.1.75	8.	
3.3	6.2.5	9.	
Exterior Walls	**2 Vinyl/Aluminum**		
1.Wood	5.Stucco	9.T-111	
2.Vin/Al	6.Brick	10.Other	
3.Compos.	7.Stone	11.	
4.Asbestos	8.Concrete	12.	
Roof Surface	**1 Asphalt Shingles**		
1.Asphalt	4.Composit	7.	
2.Slate	5.Wood	8.	
3.Metal	6.Other	9.	
SF Masonry Trim	**0**		
OPEN-3-CUSTOM	**0**		
OPEN-4-CUSTOM	**0**		
Year Built	**1950**		
Year Remodeled	**0**		
Foundation	**1 Concrete**		
1.Concrete	4.Wood	7.	
2.C Block	5.Slab	8.	
3.Br/Stone	6.Piers	9.	
Basement	**4 Full Basement**		
1.1/4 Bmt	4.Full Bmt	7.	
2.1/2 Bmt	5.None	8.	
3.3/4 Bmt	6.	9.None	
Bsmt Gar # Cars	**0**		
Wet Basement	**2 Damp Basement**		
1.Dry	4.	7.	
2.Damp	5.	8.	
3.Wet	6.	9.	

SF Bsmt Living	**0**		
Fin Bsmt Grade	**0 0**		
OPEN 5 OPTIONAL	**0**		
Heat Type	**100%**	**5 Forced Warm Air**	
1.HWBB	5.FWA	9.No Heat	
2.HWCI	6.GravWA	10.	
3.H Pump	7.Electric	11.	
4.Steam	8.Fl/Wall	12.	
Cool Type	**100%**	**3 Heat Pump**	
1.Refrig	4.W&C Air	7.	
2.Evapor	5.	8.	
3.H Pump	6.	9.None	
Kitchen Style	**2 Typical**		
1.Modern	4.Obsolete	7.	
2.Typical	5.	8.	
3.Old Type	6.	9.None	
Bath(s) Style	**2 Typical Bath(s)**		
1.Modern	4.Obsolete	7.	
2.Typical	5.	8.	
3.Old Type	6.	9.None	
# Rooms	**6**		
# Bedrooms	**3**		
# Full Baths	**1**		
# Half Baths	**1**		
# Addn Fixtures	**0**		
# Fireplaces	**0**		

TRIO Software
A Division of Harris Computer Systems

Layout	**1 Typical**		
1.Typical	4.	7.	
2.Inadeq	5.	8.	
3.Poor	6.	9.	
Attic	**4 Full Finished**		
1.1/4 Fin	4.Full Fin	7.	
2.1/2 Fin	5.Fl/Stair	8.	
3.3/4 Fin	6.	9.None	
Insulation	**1 Full**		
1.Full	4.Minimal	7.	
2.Heavy	5.Partial	8.	
3.Capped	6.	9.None	
Unfinished %	**0%**		
Grade & Factor	**3 Average 105%**		
1.E Grade	4.B Grade	7.	
2.D Grade	5.A Grade	8.SC Grade	
3.C Grade	6.AA Grade	9.Same	
SQFT (Footprint)	**1064**		
Condition	**6 Good**		
1.Poor	4.Avg	7.V G	
2.Fair	5.Avg+	8.Exc	
3.Avg-	6.Good	9.Same	
Phys. % Good	**0%**		
Funct. % Good	**100%**		
Functional Code	**9 None**		
1.Incomp	4.Delap	7.No Power	
2.O-Built	5.Bsmt	8.LongTerm	
3.Damage	6.Common	9.None	
Econ. % Good	**100%**		
Economic Code	**None**		
0.None	3.No Power	7.	
1.Location	4.Generate	8.	
2.Encroach	9.None	9.	
Entrance Code	**1 Interior Inspect**		
1.Interior	4.Vacant	7.	
2.Refusal	5.Estimate	8.	
3.Informed	6.Reviewed	9.	
Information Code	**1 Owner**		
1.Owner	4.Agent	7.	
2.Relative	5.Estimate	8.	
3.Tenant	6.Other	9.	

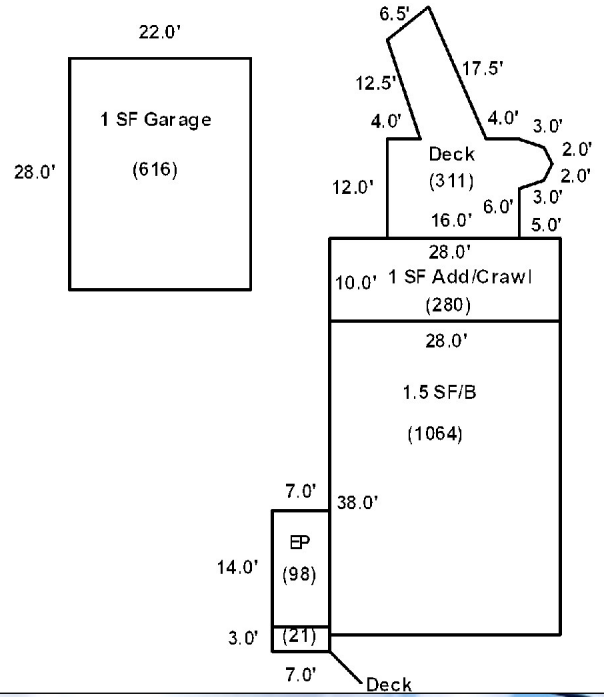

Date Inspected 10/01/2018

Additions, Outbuildings & Improvements

Type	Year	Units	Grade	Cond	Phys.	Funct.	Sound Value
1 One Story Frame	1965	280	3 100	5	0 %	100 %	
68 Wood Deck	1990	311	3 105	4	0 %	100 %	
22 Encl Frame Porch	1960	98	3 95	4	0 %	100 %	
68 Wood Deck	2000	21	3 90	4	0 %	100 %	
23 Frame Garage	1965	616	3 95	5	0 %	100 %	
					%	%	
					%	%	
					%	%	
					%	%	
					%	%	

1.One Story Fram
2.Two Story Fram
3.Three Story Fr
4.1 & 1/2 Story
5.1 & 3/4 Story
6.2 & 1/2 Story
21.Open Frame Por
22.Encl Frame Por
23.Frame Garage
24.Frame Shed
25.Frame Bay Wind
26.1SFr Overhang
27.Unfin Basement
28.Unfinished Att
29.Finished Attic

Map Lot 010-016 Account 136 Location 134 HINES STREET Card 1 Of 1 12/09/2022

McCOY, BRYAN J
290 Skyway Street, Lot 20
Presque Isle ME 04769 2096

B4449P210 B5035P82 B5263P53

Property Data

Neighborhood **1 Neighborhood One**

Tree Growth Year **0**

1ST MORTGAGE **0**

2ND MORTGAGE **0**

Zone/Land Use **1 Residential**

Secondary Zone

Topography **1 Level**

1.Level	4.Below St	7.LevelBog
2.Rolling	5.Low	8.
3.Above St	6.Swampy	9.

Utilities **2 Public Water** **3 Public Sewer**

1.Public	4.Dr Well	7.Cesspool
2.Water	5.Dug Well	8.
3.Sewer	6.Septic	9.None

Street **1 Paved**

1.Paved	4.Proposed	7.
2.Semi Imp	5.R/O/W	8.
3.Gravel	6.	9.None

TG PLAN YEAR **0**

Tif District # **0**

Sale Data

Sale Date **3/20/2012**

Price

Sale Type **2 Land & Buildings**

1.Land	4.Mobile	7.C/I L&B
2.L & B	5.Other	8.
3.Building	6.C/I Land	9.

Financing

1.Convent	4.Seller	7.
2.FHA/VA	5.Private	8.
3.Assumed	6.Cash	9.Unknown

Validity **2 Related Parties**

1.Valid	4.Split	7.Renovate
2.Related	5.Partial	8.Other
3.Distress	6.Exempt	9.

Verified **5 Public Record**

1.Buyer	4.Agent	7.Family
2.Seller	5.Pub Rec	8.Other
3.Lender	6.MLS	9.

Assessment Record

Year	Land	Buildings	Exempt	Total
2009	3,500	41,700	9,000	36,200
2012	3,500	41,700	8,800	36,400
2013	4,500	41,700	8,800	37,400
2015	4,500	41,700	9,000	37,200
2018	4,500	41,700	18,400	27,800
2019	11,300	52,000	0	63,300
2020	11,300	52,000	0	63,300
2021	11,300	52,000	0	63,300
2022	11,300	54,600	0	65,900

Land Data

Front Foot	Type	Effective Frontage	Effective Depth	Influence Factor	Influence Code
11.Regular Lot				%	
12.Delta Triangle				%	
13.Nabla Triangle				%	
14.Rear Land				%	
15.Class I Road				%	
				%	
				%	
Square Foot		**Square Feet**			
16.Class II Road	29	1,200		100 %	0
17.Municipal Rese				%	
18.Munic Sep Lago				%	
19.Gravel Pit				%	
20.Industrial Bas				%	
				%	
				%	
Fract. Acre		**Acreage/Sites**			
21.Developed Pave	21	0.25		100 %	0
22.Undev Paved (F				%	
23.Developed Grav				%	
Acres				%	
24.Undev Gravel (				%	
25.Comm Base Pave				%	
26.Comm Base Grav				%	
27.Backlot				%	
28.Rear Land				%	
29.Pavement				%	

Total Acreage 0.25

Influence Codes

1.Unimproved
2.Excess Frtg
3.Topography
4.Size/Shape
5.Access
6.Restriction
7.Open Space
8.View/Environ
9.Fract Share
Acres
30.Utility R O W
31.Tillable
32.Pasture
33.Orchard
34.Softwood F&O
35.Mixed Wood F&O
36.Hardwood F&O
37.Softwood TG
38.Mixed Wood TG
39.Hardwood TG
40.Wasteland
41.Open Space
42.Mobile Home Si
43.Condo Site
44.Lot Improvemen
45.Subdivision Lo
46.Heavy Ind Sit

Inspection Witnessed By:

X Date

No./Date	Description	Date Insp.

Notes:
*2-14-2019 -5% for attached garage.

Washburn

Washburn

Map Lot 010-016 | Account 136 | Location 134 HINES STREET | Card 1 Of 1 | 12/09/2022

Building Style	**4 Cape Cod**	
1.Conv.	5.Garrison	9.Gambrel
2.Ranch	6.Salt Box	10.Other
3.R Ranch	7.Contemp	11.Split
4.Cape	8.Log	12.
Dwelling Units	**1**	
Other Units	**0**	
Stories	**4 One & 1/2 Story**	
1.1	4.1.5	7.
2.2	5.1.75	8.
3.3	6.2.5	9.
Exterior Walls	**2 Vinyl/Aluminum**	
1.Wood	5.Stucco	9.T-111
2.Vin/Al	6.Brick	10.Other
3.Compos.	7.Stone	11.
4.Asbestos	8.Concrete	12.
Roof Surface	**1 Asphalt Shingles**	
1.Asphalt	4.Composit	7.
2.Slate	5.Wood	8.
3.Metal	6.Other	9.
SF Masonry Trim	**0**	
OPEN-3-CUSTOM	**0**	
OPEN-4-CUSTOM	**0**	
Year Built	**1950**	
Year Remodeled	**0**	
Foundation	**1 Concrete**	
1.Concrete	4.Wood	7.
2.C Block	5.Slab	8.
3.Br/Stone	6.Piers	9.
Basement	**3 3/4 Basement**	
1.1/4 Bmt	4.Full Bmt	7.
2.1/2 Bmt	5.None	8.
3.3/4 Bmt	6.	9.None
Bsmt Gar # Cars	**0**	
Wet Basement	**1 Dry Basement**	
1.Dry	4.	7.
2.Damp	5.	8.
3.Wet	6.	9.

SF Bsmt Living	**0**	
Fin Bsmt Grade	**0 0**	
OPEN 5 OPTIONAL	**0**	
Heat Type	**100%**	**5 Forced Warm Air**
1.HWBB	5.FWA	9.No Heat
2.HWCI	6.GravWA	10.
3.H Pump	7.Electric	11.
4.Steam	8.Fl/Wall	12.
Cool Type	**0%**	**9 None**
1.Refrig	4.W&C Air	7.
2.Evapor	5.	8.
3.H Pump	6.	9.None
Kitchen Style	**2 Typical**	
1.Modern	4.Obsolete	7.
2.Typical	5.	8.
3.Old Type	6.	9.None
Bath(s) Style	**2 Typical Bath(s)**	
1.Modern	4.Obsolete	7.
2.Typical	5.	8.
3.Old Type	6.	9.None
# Rooms	**5**	
# Bedrooms	**3**	
# Full Baths	**1**	
# Half Baths	**0**	
# Addn Fixtures	**0**	
# Fireplaces	**0**	

TRIO Software
A Division of Harris Computer Systems

Layout	**1 Typical**	
1.Typical	4.	7.
2.Inadeq	5.	8.
3.Poor	6.	9.
Attic	**9 None**	
1.1/4 Fin	4.Full Fin	7.
2.1/2 Fin	5.Fl/Stair	8.
3.3/4 Fin	6.	9.None
Insulation	**1 Full**	
1.Full	4.Minimal	7.
2.Heavy	5.Partial	8.
3.Capped	6.	9.None
Unfinished %	**0%**	
Grade & Factor	**3 Average 90%**	
1.E Grade	4.B Grade	7.
2.D Grade	5.A Grade	8.SC Grade
3.C Grade	6.AA Grade	9.Same
SQFT (Footprint)	**384**	
Condition	**5 Above Average**	
1.Poor	4.Avg	7.V G
2.Fair	5.Avg+	8.Exc
3.Avg-	6.Good	9.Same
Phys. % Good	**0%**	
Funct. % Good	**100%**	
Functional Code	**9 None**	
1.Incomp	4.Delap	7.No Power
2.O-Built	5.Bsmt	8.LongTerm
3.Damage	6.Common	9.None
Econ. % Good	**100%**	
Economic Code	**None**	
0.None	3.No Power	7.
1.Location	4.Generate	8.
2.Encroach	9.None	9.
Entrance Code	**5 Estimated**	
1.Interior	4.Vacant	7.
2.Refusal	5.Estimate	8.
3.Informed	6.Reviewed	9.
Information Code	**5 Estimate**	
1.Owner	4.Agent	7.
2.Relative	5.Estimate	8.
3.Tenant	6.Other	9.

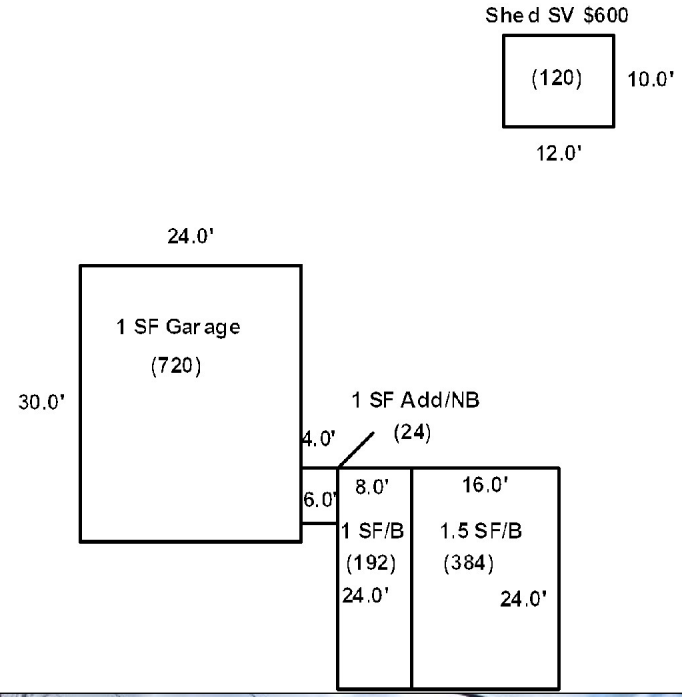

Date Inspected 10/01/2018

Additions, Outbuildings & Improvements

Type	Year	Units	Grade	Cond	Phys.	Funct.	Sound Value
20 1 Story/Bsmt	1950	192	9 100	9	0 %	100 %	
1 One Story Frame	1960	24	3 90	4	0 %	100 %	
23 Frame Garage	1960	720	3 100	4	0 %	95 %	
24 Frame Shed	0				%	%	600
					%	%	
					%	%	
					%	%	
					%	%	
					%	%	
					%	%	

1.One Story Fram
2.Two Story Fram
3.Three Story Fr
4.1 & 1/2 Story
5.1 & 3/4 Story
6.2 & 1/2 Story
21.Open Frame Por
22.Encl Frame Por
23.Frame Garage
24.Frame Shed
25.Frame Bay Wind
26.1SFr Overhang
27.Unfin Basement
28.Unfinished Att
29.Finished Attic

Map Lot 010-017 | Account 394 | Location 136 HINES STREET | Card 1 Of 1 | 12/09/2022

KETCH, ANDREW P (Susee)
416 COLBY SIDING ROAD
WOODLAND ME 04736

B4591P28 B5066P62 B5189P40

Previous Owner
Michaud, Jeffrey
P.O. Box 486

Caribou ME 04736
Sale Date: 5/16/2008

Inspection Witnessed By:

X Date

No./Date	Description	Date Insp.

Notes:

Washburn

Property Data

Neighborhood	**1 Neighborhood One**		
Tree Growth Year	**0**		
1ST MORTGAGE		**0**	
2ND MORTGAGE		**0**	
Zone/Land Use	**1 Residential**		
Secondary Zone			
Topography	**1 Level**		
	1.Level	4.Below St	7.LevelBog
	2.Rolling	5.Low	8.
	3.Above St	6.Swampy	9.
Utilities	**2 Public Water**	**3 Public Sewer**	
	1.Public	4.Dr Well	7.Cesspool
	2.Water	5.Dug Well	8.
	3.Sewer	6.Septic	9.None
Street	**1 Paved**		
	1.Paved	4.Proposed	7.
	2.Semi Imp	5.R/O/W	8.
	3.Gravel	6.	9.None
TG PLAN YEAR		**0**	
Tif District #		**0**	

Sale Data

Sale Date		**6/17/2008**	
Price		**26,500**	
Sale Type	**2 Land & Buildings**		
	1.Land	4.Mobile	7.C/I L&B
	2.L & B	5.Other	8.
	3.Building	6.C/I Land	9.
Financing	**1 Conventional**		
	1.Convent	4.Seller	7.
	2.FHA/VA	5.Private	8.
	3.Assumed	6.Cash	9.Unknown
Validity	**1 Arms Length Sale**		
	1.Valid	4.Split	7.Renovate
	2.Related	5.Partial	8.Other
	3.Distress	6.Exempt	9.
Verified	**5 Public Record**		
	1.Buyer	4.Agent	7.Family
	2.Seller	5.Pub Rec	8.Other
	3.Lender	6.MLS	9.

Assessment Record

Year	Land	Buildings	Exempt	Total
2009	4,100	15,300	9,000	10,400
2012	4,100	15,300	8,800	10,600
2013	5,300	22,400	8,800	18,900
2015	5,300	22,400	9,000	18,700
2018	5,300	22,400	0	27,700
2019	11,200	49,400	0	60,600
2020	11,200	49,400	0	60,600
2021	11,200	49,400	0	60,600
2022	11,200	51,800	0	63,000

Land Data

Front Foot	Type	Effective Frontage	Effective Depth	Influence Factor	Influence Code
11.Regular Lot				%	
12.Delta Triangle				%	
13.Nabla Triangle				%	
14.Rear Land				%	
15.Class I Road				%	
				%	
				%	
Square Foot		**Square Feet**			
16.Class II Road	29	1,000		100 %	0
17.Municipal Rese				%	
18.Munic Sep Lago				%	
19.Gravel Pit				%	
20.Industrial Bas				%	
				%	
				%	
Fract. Acre		**Acreage/Sites**			
21.Developed Pave	21	0.28		100 %	0
22.Undev Paved (F				%	
23.Developed Grav				%	
Acres				%	
24.Undev Gravel (				%	
25.Comm Base Pave				%	
26.Comm Base Grav				%	
27.Backlot				%	
28.Rear Land				%	
29.Pavement				%	

Total Acreage 0.28

Influence Codes

1.Unimproved
2.Excess Frtg
3.Topography
4.Size/Shape
5.Access
6.Restriction
7.Open Space
8.View/Environ
9.Fract Share
Acres
30.Utility R O W
31.Tillable
32.Pasture
33.Orchard
34.Softwood F&O
35.Mixed Wood F&O
36.Hardwood F&O
37.Softwood TG
38.Mixed Wood TG
39.Hardwood TG
40.Wasteland
41.Open Space
42.Mobile Home Si
43.Condo Site
44.Lot Improvemen
45.Subdivision Lo
46.Heavy Ind Sit

Washburn

Map Lot 010-017 | Account 394 | Location 136 HINES STREET | Card 1 Of 1 | 12/09/2022

Building Style	**4 Cape Cod**		
1.Conv.	5.Garrison	9.Gambrel	
2.Ranch	6.Salt Box	10.Other	
3.R Ranch	7.Contemp	11.Split	
4.Cape	8.Log	12.	
Dwelling Units	**1**		
Other Units	**0**		
Stories	**4 One & 1/2 Story**		
1.1	4.1.5	7.	
2.2	5.1.75	8.	
3.3	6.2.5	9.	
Exterior Walls	**2 Vinyl/Aluminum**		
1.Wood	5.Stucco	9.T-111	
2.Vin/Al	6.Brick	10.Other	
3.Compos.	7.Stone	11.	
4.Asbestos	8.Concrete	12.	
Roof Surface	**1 Asphalt Shingles**		
1.Asphalt	4.Composit	7.	
2.Slate	5.Wood	8.	
3.Metal	6.Other	9.	
SF Masonry Trim	**0**		
OPEN-3-CUSTOM	**0**		
OPEN-4-CUSTOM	**0**		
Year Built	**1950**		
Year Remodeled	**0**		
Foundation	**1 Concrete**		
1.Concrete	4.Wood	7.	
2.C Block	5.Slab	8.	
3.Br/Stone	6.Piers	9.	
Basement	**4 Full Basement**		
1.1/4 Bmt	4.Full Bmt	7.	
2.1/2 Bmt	5.None	8.	
3.3/4 Bmt	6.	9.None	
Bsmt Gar # Cars	**0**		
Wet Basement	**1 Dry Basement**		
1.Dry	4.	7.	
2.Damp	5.	8.	
3.Wet	6.	9.	

SF Bsmt Living	**0**		
Fin Bsmt Grade	**0 0**		
OPEN 5 OPTIONAL	**0**		
Heat Type	**100%**	**1 Hot Water BB**	
1.HWBB	5.FWA	9.No Heat	
2.HWCI	6.GravWA	10.	
3.H Pump	7.Electric	11.	
4.Steam	8.Fl/Wall	12.	
Cool Type	**0%**	**9 None**	
1.Refrig	4.W&C Air	7.	
2.Evapor	5.	8.	
3.H Pump	6.	9.None	
Kitchen Style	**2 Typical**		
1.Modern	4.Obsolete	7.	
2.Typical	5.	8.	
3.Old Type	6.	9.None	
Bath(s) Style	**2 Typical Bath(s)**		
1.Modern	4.Obsolete	7.	
2.Typical	5.	8.	
3.Old Type	6.	9.None	
# Rooms	**5**		
# Bedrooms	**2**		
# Full Baths	**1**		
# Half Baths	**0**		
# Addn Fixtures	**0**		
# Fireplaces	**0**		

TRIO Software
A Division of Harris Computer Systems

Layout	**1 Typical**		
1.Typical	4.	7.	
2.Inadeq	5.	8.	
3.Poor	6.	9.	
Attic	**9 None**		
1.1/4 Fin	4.Full Fin	7.	
2.1/2 Fin	5.Fl/Stair	8.	
3.3/4 Fin	6.	9.None	
Insulation	**1 Full**		
1.Full	4.Minimal	7.	
2.Heavy	5.Partial	8.	
3.Capped	6.	9.None	
Unfinished %	**0%**		
Grade & Factor	**2 Fair 110%**		
1.E Grade	4.B Grade	7.	
2.D Grade	5.A Grade	8.SC Grade	
3.C Grade	6.AA Grade	9.Same	
SQFT (Footprint)	**396**		
Condition	**6 Good**		
1.Poor	4.Avg	7.V G	
2.Fair	5.Avg+	8.Exc	
3.Avg-	6.Good	9.Same	
Phys. % Good	**0%**		
Funct. % Good	**100%**		
Functional Code	**9 None**		
1.Incomp	4.Delap	7.No Power	
2.O-Built	5.Bsmt	8.LongTerm	
3.Damage	6.Common	9.None	
Econ. % Good	**100%**		
Economic Code	**None**		
0.None	3.No Power	7.	
1.Location	4.Generate	8.	
2.Encroach	9.None	9.	
Entrance Code	**5 Estimated**		
1.Interior	4.Vacant	7.	
2.Refusal	5.Estimate	8.	
3.Informed	6.Reviewed	9.	
Information Code	**5 Estimate**		
1.Owner	4.Agent	7.	
2.Relative	5.Estimate	8.	
3.Tenant	6.Other	9.	

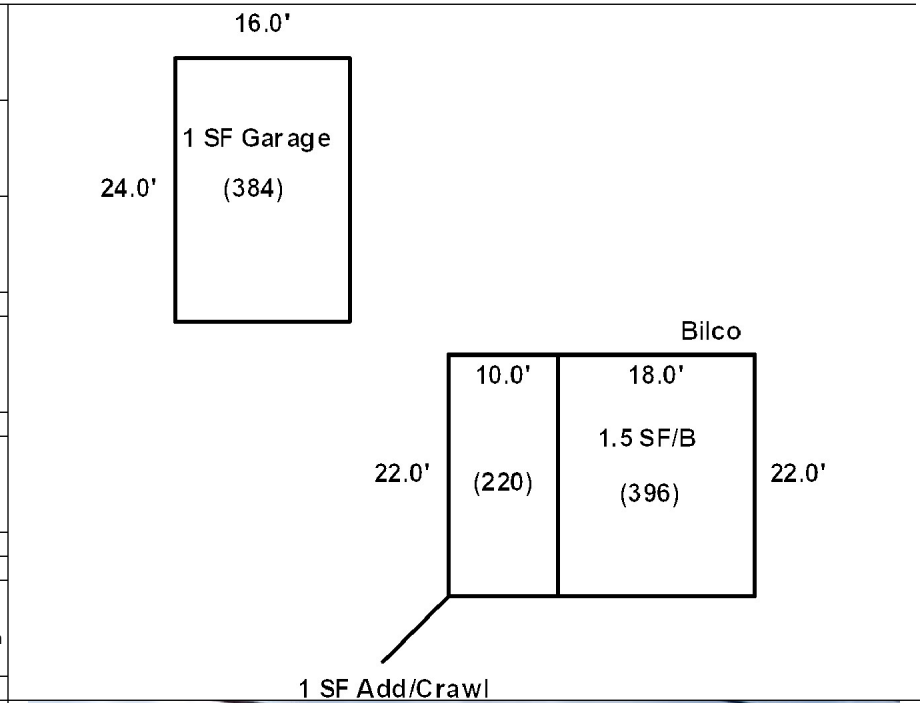

Date Inspected 10/01/2018

Additions, Outbuildings & Improvements

Type	Year	Units	Grade	Cond	Phys.	Funct.	Sound Value
1 One Story Frame	1965	220	3 95	4	0 %	100 %	
23 Frame Garage	2012	384	3 95	4	0 %	90 %	
					%	%	
					%	%	
					%	%	
					%	%	
					%	%	
					%	%	
					%	%	
					%	%	

1.One Story Fram
2.Two Story Fram
3.Three Story Fr
4.1 & 1/2 Story
5.1 & 3/4 Story
6.2 & 1/2 Story
21.Open Frame Por
22.Encl Frame Por
23.Frame Garage
24.Frame Shed
25.Frame Bay Wind
26.1SFr Overhang
27.Unfin Basement
28.Unfinished Att
29.Finished Attic

Map Lot 010-018 Account 548 Location HINES STREET Card 1 Of 1 12/09/2022

PORTER FARMS, LLC
601 GRIFFIN RIDGE ROAD
MAPLETON ME 04757

B5567P210

Previous Owner
Irving & Marr Farms
221 Davis Road

Woodland ME 04736
Sale Date: 7/27/2016

Inspection Witnessed By:

X Date

No./Date	Description	Date Insp.

Notes:

Washburn

Property Data

Neighborhood	**1 Neighborhood One**
Tree Growth Year	**0**
1ST MORTGAGE	**0**
2ND MORTGAGE	**0**
Zone/Land Use	**2 Commercial**
Secondary Zone	
Topography	**2 Rolling**

1.Level	4.Below St	7.LevelBog
2.Rolling	5.Low	8.
3.Above St	6.Swampy	9.

Utilities

1.Public	4.Dr Well	7.Cesspool
2.Water	5.Dug Well	8.
3.Sewer	6.Septic	9.None

Street **1 Paved**

1.Paved	4.Proposed	7.
2.Semi Imp	5.R/O/W	8.
3.Gravel	6.	9.None

TG PLAN YEAR	**0**
Tif District #	**0**

Sale Data

Sale Date	**7/27/2016**
Price	
Sale Type	**1 Land Only**

1.Land	4.Mobile	7.C/I L&B
2.L & B	5.Other	8.
3.Building	6.C/I Land	9.

Financing **4 Seller Financed**

1.Convent	4.Seller	7.
2.FHA/VA	5.Private	8.
3.Assumed	6.Cash	9.Unknown

Validity **1 Arms Length Sale**

1.Valid	4.Split	7.Renovate
2.Related	5.Partial	8.Other
3.Distress	6.Exempt	9.

Verified **5 Public Record**

1.Buyer	4.Agent	7.Family
2.Seller	5.Pub Rec	8.Other
3.Lender	6.MLS	9.

Assessment Record

Year	Land	Buildings	Exempt	Total
2009	6,400	0	0	6,400
2012	6,400	0	0	6,400
2013	8,300	0	0	8,300
2015	8,300	0	0	8,300
2018	8,300	0	0	8,300
2019	11,500	0	0	11,500
2020	11,500	0	0	11,500
2021	11,500	0	0	11,500
2022	11,500	0	0	11,500

Land Data

Front Foot	Type	Effective Frontage	Effective Depth	Influence Factor	Influence Code
11.Regular Lot				%	
12.Delta Triangle				%	
13.Nabla Triangle				%	
14.Rear Land				%	
15.Class I Road				%	
				%	
				%	
Square Foot		**Square Feet**			
16.Class II Road				%	
17.Municipal Rese				%	
18.Munic Sep Lago				%	
19.Gravel Pit				%	
20.Industrial Bas				%	
				%	
				%	
Fract. Acre		**Acreage/Sites**			
21.Developed Pave	22	1.00	100	%	0
22.Undev Paved (F	28	5.00	100	%	0
23.Developed Grav				%	
Acres				%	
24.Undev Gravel (				%	
25.Comm Base Pave				%	
26.Comm Base Grav				%	
27.Backlot				%	
28.Rear Land				%	
29.Pavement				%	

Total Acreage 6.00

Influence Codes

1.Unimproved
2.Excess Frtg
3.Topography
4.Size/Shape
5.Access
6.Restriction
7.Open Space
8.View/Environ
9.Fract Share
Acres
30.Utility R O W
31.Tillable
32.Pasture
33.Orchard
34.Softwood F&O
35.Mixed Wood F&O
36.Hardwood F&O
37.Softwood TG
38.Mixed Wood TG
39.Hardwood TG
40.Wasteland
41.Open Space
42.Mobile Home Si
43.Condo Site
44.Lot Improvemen
45.Subdivision Lo
46.Heavy Ind Sit

Washburn

Map Lot 010-018 | Account 548 | Location HINES STREET | Card 1 Of 1 | 12/09/2022

Building Style **0**		
1.Conv.	5.Garrison	9.Gambrel
2.Ranch	6.Salt Box	10.Other
3.R Ranch	7.Contemp	11.Split
4.Cape	8.Log	12.
Dwelling Units **0**		
Other Units **0**		
Stories **0**		
1.1	4.1.5	7.
2.2	5.1.75	8.
3.3	6.2.5	9.
Exterior Walls **0**		
1.Wood	5.Stucco	9.T-111
2.Vin/Al	6.Brick	10.Other
3.Compos.	7.Stone	11.
4.Asbestos	8.Concrete	12.
Roof Surface **0**		
1.Asphalt	4.Composit	7.
2.Slate	5.Wood	8.
3.Metal	6.Other	9.
SF Masonry Trim **0**		
OPEN-3-CUSTOM **0**		
OPEN-4-CUSTOM **0**		
Year Built **0**		
Year Remodeled **0**		
Foundation **0**		
1.Concrete	4.Wood	7.
2.C Block	5.Slab	8.
3.Br/Stone	6.Piers	9.
Basement **0**		
1.1/4 Bmt	4.Full Bmt	7.
2.1/2 Bmt	5.None	8.
3.3/4 Bmt	6.	9.None
Bsmt Gar # Cars **0**		
Wet Basement **0**		
1.Dry	4.	7.
2.Damp	5.	8.
3.Wet	6.	9.

SF Bsmt Living **0**		
Fin Bsmt Grade **0 0**		
OPEN 5 OPTIONAL **0**		
Heat Type **100%** **0**		
1.HWBB	5.FWA	9.No Heat
2.HWCI	6.GravWA	10.
3.H Pump	7.Electric	11.
4.Steam	8.Fl/Wall	12.
Cool Type **0%** **9 None**		
1.Refrig	4.W&C Air	7.
2.Evapor	5.	8.
3.H Pump	6.	9.None
Kitchen Style **0**		
1.Modern	4.Obsolete	7.
2.Typical	5.	8.
3.Old Type	6.	9.None
Bath(s) Style **0**		
1.Modern	4.Obsolete	7.
2.Typical	5.	8.
3.Old Type	6.	9.None
# Rooms **0**		
# Bedrooms **0**		
# Full Baths **0**		
# Half Baths **0**		
# Addn Fixtures **0**		
# Fireplaces **0**		

TRIO Software
A Division of Harris Computer Systems

Layout **0**		
1.Typical	4.	7.
2.Inadeq	5.	8.
3.Poor	6.	9.
Attic **0**		
1.1/4 Fin	4.Full Fin	7.
2.1/2 Fin	5.Fl/Stair	8.
3.3/4 Fin	6.	9.None
Insulation **0**		
1.Full	4.Minimal	7.
2.Heavy	5.Partial	8.
3.Capped	6.	9.None
Unfinished % **0%**		
Grade & Factor **0 0%**		
1.E Grade	4.B Grade	7.
2.D Grade	5.A Grade	8.SC Grade
3.C Grade	6.AA Grade	9.Same
SQFT (Footprint) **0**		
Condition **0**		
1.Poor	4.Avg	7.V G
2.Fair	5.Avg+	8.Exc
3.Avg-	6.Good	9.Same
Phys. % Good **0%**		
Funct. % Good **100%**		
Functional Code **9 None**		
1.Incomp	4.Delap	7.No Power
2.O-Built	5.Bsmt	8.LongTerm
3.Damage	6.Common	9.None
Econ. % Good **100%**		
Economic Code **None**		
0.None	3.No Power	7.
1.Location	4.Generate	8.
2.Encroach	9.None	9.
Entrance Code **0**		
1.Interior	4.Vacant	7.
2.Refusal	5.Estimate	8.
3.Informed	6.Reviewed	9.
Information Code **0**		
1.Owner	4.Agent	7.
2.Relative	5.Estimate	8.
3.Tenant	6.Other	9.

Date Inspected

Additions, Outbuildings & Improvements

Type	Year	Units	Grade	Cond	Phys.	Funct.	Sound Value
					%	%	
					%	%	
					%	%	
					%	%	
					%	%	
					%	%	
					%	%	
					%	%	
					%	%	
					%	%	

1.One Story Fram
2.Two Story Fram
3.Three Story Fr
4.1 & 1/2 Story
5.1 & 3/4 Story
6.2 & 1/2 Story
21.Open Frame Por
22.Encl Frame Por
23.Frame Garage
24.Frame Shed
25.Frame Bay Wind
26.1SFr Overhang
27.Unfin Basement
28.Unfinished Att
29.Finished Attic

Map Lot 010-018A | Account 65 | Location 71 Story Street | Card 1 Of 1 | 12/09/2022

BROWN, KEITH R
BROWN, SUE H
PO BOX 314
WASHBURN ME 04786

B6055P13

Previous Owner
Brown, Robert K
Brown, Keith
PO BOX 213
WASHBURN ME 04786
Sale Date: 8/24/2020

Inspection Witnessed By:

X Date

No./Date	Description	Date Insp.

Notes:

Property Data

Neighborhood **1 Neighborhood One**

Tree Growth Year **0**

1ST MORTGAGE **0**

2ND MORTGAGE **0**

Zone/Land Use **1 Residential**

Secondary Zone

Topography **1 Level**

1.Level	4.Below St	7.LevelBog
2.Rolling	5.Low	8.
3.Above St	6.Swampy	9.

Utilities **4 Drilled Well** **6 Septic System**

1.Public	4.Dr Well	7.Cesspool
2.Water	5.Dug Well	8.
3.Sewer	6.Septic	9.None

Street **1 Paved**

1.Paved	4.Proposed	7.
2.Semi Imp	5.R/O/W	8.
3.Gravel	6.	9.None

TG PLAN YEAR **0**

Tif District # **0**

Sale Data

Sale Date **8/24/2020**

Price

Sale Type **2 Land & Buildings**

1.Land	4.Mobile	7.C/I L&B
2.L & B	5.Other	8.
3.Building	6.C/I Land	9.

Financing **9 Unknown**

1.Convent	4.Seller	7.
2.FHA/VA	5.Private	8.
3.Assumed	6.Cash	9.Unknown

Validity **2 Related Parties**

1.Valid	4.Split	7.Renovate
2.Related	5.Partial	8.Other
3.Distress	6.Exempt	9.

Verified **5 Public Record**

1.Buyer	4.Agent	7.Family
2.Seller	5.Pub Rec	8.Other
3.Lender	6.MLS	9.

Assessment Record

Year	Land	Buildings	Exempt	Total
2009	7,000	12,400	0	19,400
2012	7,000	12,400	0	19,400
2013	9,000	12,400	0	21,400
2015	9,000	12,400	0	21,400
2018	9,000	12,400	0	21,400
2019	13,200	27,000	0	40,200
2020	13,200	27,000	0	40,200
2021	13,200	27,000	0	40,200
2022	13,200	28,300	0	41,500

Land Data

Front Foot	Type	Effective Frontage	Effective Depth	Influence Factor	Influence Code
11.Regular Lot				%	
12.Delta Triangle				%	
13.Nabla Triangle				%	
14.Rear Land				%	
15.Class I Road				%	
				%	
				%	
Square Foot		**Square Feet**			
16.Class II Road	29	1,000		75 %	0
17.Municipal Rese				%	
18.Munic Sep Lago				%	
19.Gravel Pit				%	
20.Industrial Bas				%	
				%	
				%	
Fract. Acre		**Acreage/Sites**			
21.Developed Pave	21	0.43		100 %	0
22.Undev Paved (F	28	1.07		100 %	0
23.Developed Grav				%	
Acres				%	
24.Undev Gravel (				%	
25.Comm Base Pave				%	
26.Comm Base Grav				%	
27.Backlot				%	
28.Rear Land				%	
29.Pavement				%	

Total Acreage 1.50

Influence Codes

1.Unimproved
2.Excess Frtg
3.Topography
4.Size/Shape
5.Access
6.Restriction
7.Open Space
8.View/Environ
9.Fract Share
Acres
30.Utility R O W
31.Tillable
32.Pasture
33.Orchard
34.Softwood F&O
35.Mixed Wood F&O
36.Hardwood F&O
37.Softwood TG
38.Mixed Wood TG
39.Hardwood TG
40.Wasteland
41.Open Space
42.Mobile Home Si
43.Condo Site
44.Lot Improvemen
45.Subdivision Lo
46.Heavy Ind Sit

Washburn

Washburn

Map Lot 010-018A | Account 65 | Location 71 Story Street | Card 1 Of 1 | 12/09/2022

Building Style		
1.Conv.	5.Garrison	9.Gambrel
2.Ranch	6.Salt Box	10.Other
3.R Ranch	7.Contemp	11.Split
4.Cape	8.Log	12.

Dwelling Units

Other Units

Stories		
1.1	4.1.5	7.
2.2	5.1.75	8.
3.3	6.2.5	9.

Exterior Walls		
1.Wood	5.Stucco	9.T-111
2.Vin/Al	6.Brick	10.Other
3.Compos.	7.Stone	11.
4.Asbestos	8.Concrete	12.

Roof Surface		
1.Asphalt	4.Composit	7.
2.Slate	5.Wood	8.
3.Metal	6.Other	9.

SF Masonry Trim

OPEN-3-CUSTOM

OPEN-4-CUSTOM

Year Built

Year Remodeled

Foundation		
1.Concrete	4.Wood	7.
2.C Block	5.Slab	8.
3.Br/Stone	6.Piers	9.

Basement		
1.1/4 Bmt	4.Full Bmt	7.
2.1/2 Bmt	5.None	8.
3.3/4 Bmt	6.	9.None

Bsmt Gar # Cars

Wet Basement		
1.Dry	4.	7.
2.Damp	5.	8.
3.Wet	6.	9.

SF Bsmt Living

Fin Bsmt Grade

OPEN 5 OPTIONAL

Heat Type **100%**		
1.HWBB	5.FWA	9.No Heat
2.HWCI	6.GravWA	10.
3.H Pump	7.Electric	11.
4.Steam	8.Fl/Wall	12.

Cool Type **0%**		
1.Refrig	4.W&C Air	7.
2.Evapor	5.	8.
3.H Pump	6.	9.None

Kitchen Style		
1.Modern	4.Obsolete	7.
2.Typical	5.	8.
3.Old Type	6.	9.None

Bath(s) Style		
1.Modern	4.Obsolete	7.
2.Typical	5.	8.
3.Old Type	6.	9.None

Rooms

Bedrooms

Full Baths

Half Baths

Addn Fixtures

Fireplaces

TRIO Software
A Division of Harris Computer Systems

Layout		
1.Typical	4.	7.
2.Inadeq	5.	8.
3.Poor	6.	9.

Attic		
1.1/4 Fin	4.Full Fin	7.
2.1/2 Fin	5.Fl/Stair	8.
3.3/4 Fin	6.	9.None

Insulation		
1.Full	4.Minimal	7.
2.Heavy	5.Partial	8.
3.Capped	6.	9.None

Unfinished %

Grade & Factor		
1.E Grade	4.B Grade	7.
2.D Grade	5.A Grade	8.SC Grade
3.C Grade	6.AA Grade	9.Same

SQFT (Footprint)

Condition		
1.Poor	4.Avg	7.V G
2.Fair	5.Avg+	8.Exc
3.Avg-	6.Good	9.Same

Phys. % Good

Funct. % Good

Functional Code		
1.Incomp	4.Delap	7.No Power
2.O-Built	5.Bsmt	8.LongTerm
3.Damage	6.Common	9.None

Econ. % Good

Economic Code		
0.None	3.No Power	7.
1.Location	4.Generate	8.
2.Encroach	9.None	9.

Entrance Code **1 Interior Inspect**		
1.Interior	4.Vacant	7.
2.Refusal	5.Estimate	8.
3.Informed	6.Reviewed	9.

Information Code **1 Owner**		
1.Owner	4.Agent	7.
2.Relative	5.Estimate	8.
3.Tenant	6.Other	9.

Date Inspected 4/30/2019

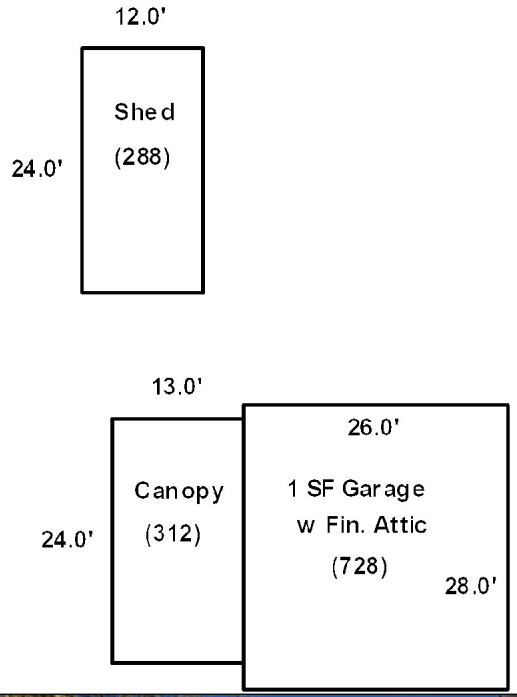

Additions, Outbuildings & Improvements

Type	Year	Units	Grade	Cond	Phys.	Funct.	Sound Value
23 Frame Garage	1980	728	3 105	4	0 %	100 %	
29 Finished Attic	1980	728	2 110	4	0 %	100 %	
61 Canopy	1985	312	2 105	4	0 %	100 %	
24 Frame Shed	2000	288	3 95	4	0 %	100 %	
					%	%	
					%	%	
					%	%	
					%	%	
					%	%	
					%	%	

1.One Story Fram
2.Two Story Fram
3.Three Story Fr
4.1 & 1/2 Story
5.1 & 3/4 Story
6.2 & 1/2 Story
21.Open Frame Por
22.Encl Frame Por
23.Frame Garage
24.Frame Shed
25.Frame Bay Wind
26.1SFr Overhang
27.Unfin Basement
28.Unfinished Att
29.Finished Attic

Map Lot 010-018A/ON Account 63 Location Story Street Card 1 Of 1 12/09/2022

BROWN, KEITH R
PO BOX 314
WASHBURN ME 04786

Property Data

Neighborhood **1 Neighborhood One**

Tree Growth Year **0**

1ST MORTGAGE **0**

2ND MORTGAGE **0**

Zone/Land Use **1 Residential**

Secondary Zone

Topography **1 Level**

1.Level	4.Below St	7.LevelBog
2.Rolling	5.Low	8.
3.Above St	6.Swampy	9.

Utilities **4 Drilled Well** **3 Public Sewer**

1.Public	4.Dr Well	7.Cesspool
2.Water	5.Dug Well	8.
3.Sewer	6.Septic	9.None

Street **1 Paved**

1.Paved	4.Proposed	7.
2.Semi Imp	5.R/O/W	8.
3.Gravel	6.	9.None

TG PLAN YEAR **0**

Tif District # **0**

Sale Data

Sale Date

Price

Sale Type

1.Land	4.Mobile	7.C/I L&B
2.L & B	5.Other	8.
3.Building	6.C/I Land	9.

Financing

1.Convent	4.Seller	7.
2.FHA/VA	5.Private	8.
3.Assumed	6.Cash	9.Unknown

Validity

1.Valid	4.Split	7.Renovate
2.Related	5.Partial	8.Other
3.Distress	6.Exempt	9.

Verified

1.Buyer	4.Agent	7.Family
2.Seller	5.Pub Rec	8.Other
3.Lender	6.MLS	9.

Assessment Record

Year	Land	Buildings	Exempt	Total
2009	0	39,500	14,400	25,100
2012	0	39,500	14,080	25,420
2013	0	39,500	14,080	25,420
2015	0	39,500	14,400	25,100
2018	0	39,500	23,920	15,580
2019	0	17,300	17,300	0
2020	0	17,300	0	17,300
2021	0	1,800	0	1,800
2022	0	1,900	0	1,900

Land Data

Front Foot	Type	Effective Frontage	Effective Depth	Influence Factor	Influence Code
11.Regular Lot				%	
12.Delta Triangle				%	
13.Nabla Triangle				%	
14.Rear Land				%	
15.Class I Road				%	
				%	
				%	
Square Foot		**Square Feet**			
16.Class II Road				%	
17.Municipal Rese				%	
18.Munic Sep Lago				%	
19.Gravel Pit				%	
20.Industrial Bas				%	
				%	
				%	
Fract. Acre		**Acreage/Sites**			
21.Developed Pave				%	
22.Undev Paved (F				%	
23.Developed Grav				%	
Acres				%	
24.Undev Gravel (				%	
25.Comm Base Pave				%	
26.Comm Base Grav				%	
27.Backlot				%	
28.Rear Land				%	
29.Pavement				%	

Total Acreage 0.00

Influence Codes

1.Unimproved
2.Excess Frtg
3.Topography
4.Size/Shape
5.Access
6.Restriction
7.Open Space
8.View/Environ
9.Fract Share
Acres
30.Utility R O W
31.Tillable
32.Pasture
33.Orchard
34.Softwood F&O
35.Mixed Wood F&O
36.Hardwood F&O
37.Softwood TG
38.Mixed Wood TG
39.Hardwood TG
40.Wasteland
41.Open Space
42.Mobile Home Si
43.Condo Site
44.Lot Improvemen
45.Subdivision Lo
46.Heavy Ind Sit

Inspection Witnessed By:

X Date

No./Date	Description	Date Insp.

Notes:

* Robert passed away, ownership now goes to Keith.
4-8-2021 ED
* Moved MH off property for 2021, only slab remains.
4-7-2021 ED
*2-14-2019 MH HUD # PFS 494530.

Washburn

Washburn

Map Lot 010-018A/ON | Account 63 | Location Story Street | Card 1 Of 1 | 12/09/2022

Building Style		
1.Conv.	5.Garrison	9.Gambrel
2.Ranch	6.Salt Box	10.Other
3.R Ranch	7.Contemp	11.Split
4.Cape	8.Log	12.

Dwelling Units
Other Units

Stories		
1.1	4.1.5	7.
2.2	5.1.75	8.
3.3	6.2.5	9.

Exterior Walls		
1.Wood	5.Stucco	9.T-111
2.Vin/Al	6.Brick	10.Other
3.Compos.	7.Stone	11.
4.Asbestos	8.Concrete	12.

Roof Surface		
1.Asphalt	4.Composit	7.
2.Slate	5.Wood	8.
3.Metal	6.Other	9.

SF Masonry Trim
OPEN-3-CUSTOM
OPEN-4-CUSTOM
Year Built
Year Remodeled

Foundation		
1.Concrete	4.Wood	7.
2.C Block	5.Slab	8.
3.Br/Stone	6.Piers	9.

Basement		
1.1/4 Bmt	4.Full Bmt	7.
2.1/2 Bmt	5.None	8.
3.3/4 Bmt	6.	9.None

Bsmt Gar # Cars

Wet Basement		
1.Dry	4.	7.
2.Damp	5.	8.
3.Wet	6.	9.

SF Bsmt Living
Fin Bsmt Grade
OPEN 5 OPTIONAL

Heat Type **100%**		
1.HWBB	5.FWA	9.No Heat
2.HWCI	6.GravWA	10.
3.H Pump	7.Electric	11.
4.Steam	8.Fl/Wall	12.

Cool Type **0%**		
1.Refrig	4.W&C Air	7.
2.Evapor	5.	8.
3.H Pump	6.	9.None

Kitchen Style		
1.Modern	4.Obsolete	7.
2.Typical	5.	8.
3.Old Type	6.	9.None

Bath(s) Style		
1.Modern	4.Obsolete	7.
2.Typical	5.	8.
3.Old Type	6.	9.None

Rooms
Bedrooms
Full Baths
Half Baths
Addn Fixtures
Fireplaces

TRIO Software
A Division of Harris Computer Systems

Layout		
1.Typical	4.	7.
2.Inadeq	5.	8.
3.Poor	6.	9.

Attic		
1.1/4 Fin	4.Full Fin	7.
2.1/2 Fin	5.Fl/Stair	8.
3.3/4 Fin	6.	9.None

Insulation		
1.Full	4.Minimal	7.
2.Heavy	5.Partial	8.
3.Capped	6.	9.None

Unfinished %

Grade & Factor		
1.E Grade	4.B Grade	7.
2.D Grade	5.A Grade	8.SC Grade
3.C Grade	6.AA Grade	9.Same

SQFT (Footprint)

Condition		
1.Poor	4.Avg	7.V G
2.Fair	5.Avg+	8.Exc
3.Avg-	6.Good	9.Same

Phys. % Good
Funct. % Good

Functional Code		
1.Incomp	4.Delap	7.No Power
2.O-Built	5.Bsmt	8.LongTerm
3.Damage	6.Common	9.None

Econ. % Good

Economic Code		
0.None	3.No Power	7.
1.Location	4.Generate	8.
2.Encroach	9.None	9.

Entrance Code **1 Interior Inspect**		
1.Interior	4.Vacant	7.
2.Refusal	5.Estimate	8.
3.Informed	6.Reviewed	9.

Information Code **1 Owner**		
1.Owner	4.Agent	7.
2.Relative	5.Estimate	8.
3.Tenant	6.Other	9.

Date Inspected 4/30/2019

Additions, Outbuildings & Improvements

Type	Year	Units	Grade	Cond	Phys.	Funct.	Sound Value
48 Concrete Slab	1998	768	3 100	4	0 %	100 %	
					%	%	
					%	%	
					%	%	
					%	%	
					%	%	
					%	%	
					%	%	
					%	%	
					%	%	

1.One Story Fram
2.Two Story Fram
3.Three Story Fr
4.1 & 1/2 Story
5.1 & 3/4 Story
6.2 & 1/2 Story
21.Open Frame Por
22.Encl Frame Por
23.Frame Garage
24.Frame Shed
25.Frame Bay Wind
26.1SFr Overhang
27.Unfin Basement
28.Unfinished Att
29.Finished Attic

Map Lot 010-018B | Account 316 | Location 142 HINES STREET | Card 1 Of 1 | 12/09/2022

ROUSE, REBECCA
142 Hines Street
WASHBURN ME 04786

B2925P119 B3499P342 B5702P30

Previous Owner
DAIGLE, ROGER A. SR.
DAIGLE, EMILY E.
P.O. BOX 319
WASHBURN ME 04786
Sale Date: 9/18/2017

Inspection Witnessed By:

X Date

No./Date	Description	Date Insp.

Notes:
*2-14-2019 DW HUD #'s TRA 255762 and TRA 255761.

Washburn

Property Data

Neighborhood	**1 Neighborhood One**
Tree Growth Year	**0**
1ST MORTGAGE	**0**
2ND MORTGAGE	**0**
Zone/Land Use	**1 Residential**
Secondary Zone	
Topography	**1 Level**

1.Level	4.Below St	7.LevelBog
2.Rolling	5.Low	8.
3.Above St	6.Swampy	9.

Utilities **2 Public Water** **3 Public Sewer**

1.Public	4.Dr Well	7.Cesspool
2.Water	5.Dug Well	8.
3.Sewer	6.Septic	9.None

Street **1 Paved**

1.Paved	4.Proposed	7.
2.Semi Imp	5.R/O/W	8.
3.Gravel	6.	9.None

TG PLAN YEAR	**0**
Tif District #	**0**

Sale Data

Sale Date	**9/18/2017**
Price	**50,000**
Sale Type	**2 Land & Buildings**

1.Land	4.Mobile	7.C/I L&B
2.L & B	5.Other	8.
3.Building	6.C/I Land	9.

Financing **1 Conventional**

1.Convent	4.Seller	7.
2.FHA/VA	5.Private	8.
3.Assumed	6.Cash	9.Unknown

Validity **1 Arms Length Sale**

1.Valid	4.Split	7.Renovate
2.Related	5.Partial	8.Other
3.Distress	6.Exempt	9.

Verified **5 Public Record**

1.Buyer	4.Agent	7.Family
2.Seller	5.Pub Rec	8.Other
3.Lender	6.MLS	9.

Assessment Record

Year	Land	Buildings	Exempt	Total
2009	9,600	41,900	14,400	37,100
2012	9,600	41,900	14,080	37,420
2013	12,400	43,100	14,080	41,420
2015	12,400	43,100	14,400	41,100
2018	12,400	43,100	18,400	37,100
2019	16,500	45,200	20,000	41,700
2020	16,500	45,200	25,000	36,700
2021	16,500	45,200	25,000	36,700
2022	16,500	47,400	25,000	38,900

Land Data

Front Foot	Type	Effective Frontage	Effective Depth	Influence Factor	Influence Code
11.Regular Lot				%	
12.Delta Triangle				%	
13.Nabla Triangle				%	
14.Rear Land				%	
15.Class I Road				%	
				%	
				%	
Square Foot		**Square Feet**			
16.Class II Road				%	
17.Municipal Rese				%	
18.Munic Sep Lago				%	
19.Gravel Pit				%	
20.Industrial Bas				%	
				%	
				%	
Fract. Acre		**Acreage/Sites**			
21.Developed Pave	21	1.00		100 %	0
22.Undev Paved (F				%	
23.Developed Grav				%	
Acres				%	
24.Undev Gravel (				%	
25.Comm Base Pave				%	
26.Comm Base Grav				%	
27.Backlot				%	
28.Rear Land				%	
29.Pavement				%	

Total Acreage 1.00

Influence Codes

1.Unimproved
2.Excess Frtg
3.Topography
4.Size/Shape
5.Access
6.Restriction
7.Open Space
8.View/Environ
9.Fract Share
Acres
30.Utility R O W
31.Tillable
32.Pasture
33.Orchard
34.Softwood F&O
35.Mixed Wood F&O
36.Hardwood F&O
37.Softwood TG
38.Mixed Wood TG
39.Hardwood TG
40.Wasteland
41.Open Space
42.Mobile Home Si
43.Condo Site
44.Lot Improvemen
45.Subdivision Lo
46.Heavy Ind Sit

Washburn

Map Lot 010-018B | Account 316 | Location 142 HINES STREET | Card 1 Of 1 | 12/09/2022

Building Style **0**		
1.Conv.	5.Garrison	9.Gambrel
2.Ranch	6.Salt Box	10.Other
3.R Ranch	7.Contemp	11.Split
4.Cape	8.Log	12.
Dwelling Units **0**		
Other Units **0**		
Stories **0**		
1.1	4.1.5	7.
2.2	5.1.75	8.
3.3	6.2.5	9.
Exterior Walls **0**		
1.Wood	5.Stucco	9.T-111
2.Vin/Al	6.Brick	10.Other
3.Compos.	7.Stone	11.
4.Asbestos	8.Concrete	12.
Roof Surface **0**		
1.Asphalt	4.Composit	7.
2.Slate	5.Wood	8.
3.Metal	6.Other	9.
SF Masonry Trim **0**		
OPEN-3-CUSTOM **0**		
OPEN-4-CUSTOM **0**		
Year Built **0**		
Year Remodeled **0**		
Foundation **0**		
1.Concrete	4.Wood	7.
2.C Block	5.Slab	8.
3.Br/Stone	6.Piers	9.
Basement **0**		
1.1/4 Bmt	4.Full Bmt	7.
2.1/2 Bmt	5.None	8.
3.3/4 Bmt	6.	9.None
Bsmt Gar # Cars **0**		
Wet Basement **0**		
1.Dry	4.	7.
2.Damp	5.	8.
3.Wet	6.	9.

SF Bsmt Living **0**		
Fin Bsmt Grade **0 0**		
OPEN 5 OPTIONAL **0**		
Heat Type **100%** **0**		
1.HWBB	5.FWA	9.No Heat
2.HWCI	6.GravWA	10.
3.H Pump	7.Electric	11.
4.Steam	8.Fl/Wall	12.
Cool Type **0%** **9 None**		
1.Refrig	4.W&C Air	7.
2.Evapor	5.	8.
3.H Pump	6.	9.None
Kitchen Style **0**		
1.Modern	4.Obsolete	7.
2.Typical	5.	8.
3.Old Type	6.	9.None
Bath(s) Style **0**		
1.Modern	4.Obsolete	7.
2.Typical	5.	8.
3.Old Type	6.	9.None
# Rooms **0**		
# Bedrooms **0**		
# Full Baths **0**		
# Half Baths **0**		
# Addn Fixtures **0**		
# Fireplaces **0**		

TRIO Software
A Division of Harris Computer Systems

Layout **0**		
1.Typical	4.	7.
2.Inadeq	5.	8.
3.Poor	6.	9.
Attic **0**		
1.1/4 Fin	4.Full Fin	7.
2.1/2 Fin	5.Fl/Stair	8.
3.3/4 Fin	6.	9.None
Insulation **0**		
1.Full	4.Minimal	7.
2.Heavy	5.Partial	8.
3.Capped	6.	9.None
Unfinished % **0%**		
Grade & Factor **0 0%**		
1.E Grade	4.B Grade	7.
2.D Grade	5.A Grade	8.SC Grade
3.C Grade	6.AA Grade	9.Same
SQFT (Footprint) **0**		
Condition **0**		
1.Poor	4.Avg	7.V G
2.Fair	5.Avg+	8.Exc
3.Avg-	6.Good	9.Same
Phys. % Good **0%**		
Funct. % Good **100%**		
Functional Code **9 None**		
1.Incomp	4.Delap	7.No Power
2.O-Built	5.Bsmt	8.LongTerm
3.Damage	6.Common	9.None
Econ. % Good **100%**		
Economic Code **None**		
0.None	3.No Power	7.
1.Location	4.Generate	8.
2.Encroach	9.None	9.
Entrance Code **3 Information Only**		
1.Interior	4.Vacant	7.
2.Refusal	5.Estimate	8.
3.Informed	6.Reviewed	9.
Information Code **1 Owner**		
1.Owner	4.Agent	7.
2.Relative	5.Estimate	8.
3.Tenant	6.Other	9.

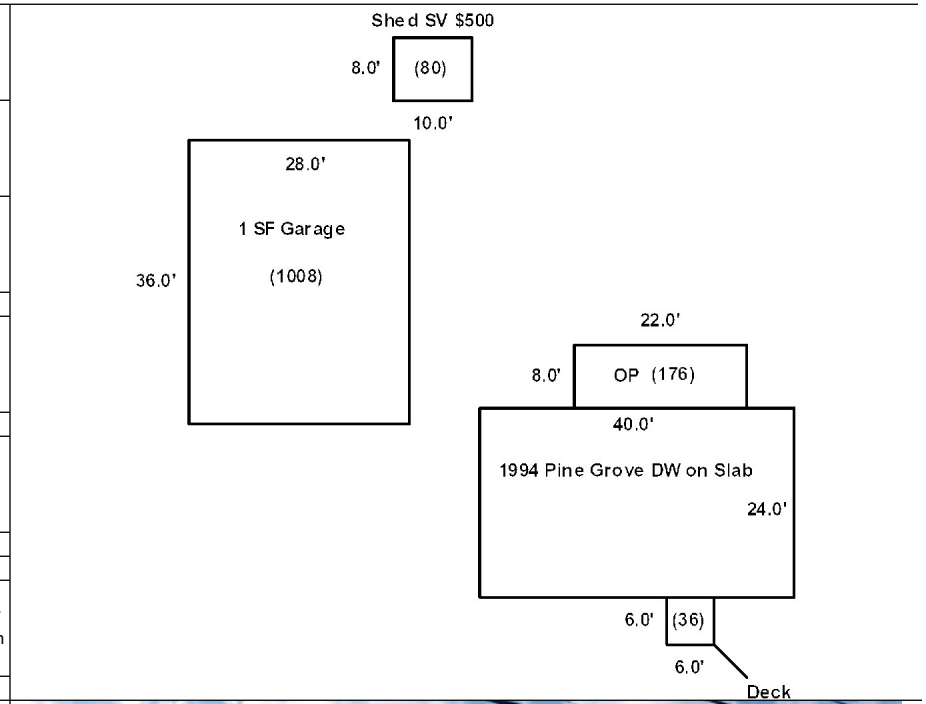

Date Inspected 10/01/2018

Additions, Outbuildings & Improvements

Type	Year	Units	Grade	Cond	Phys.	Funct.	Sound Value
992 Double Wide	1994	24x40	4 100	6	0 %	100 %	
48 Concrete Slab	1994	960	3 100	4	0 %	100 %	
68 Wood Deck	2018	36	3 100	4	0 %	100 %	
21 Open Frame	2000	176	2 115	4	0 %	100 %	
23 Frame Garage	2004	1008	3 100	4	0 %	100 %	
24 Frame Shed	0				%	%	500
					%	%	
					%	%	
					%	%	
					%	%	

1.One Story Fram
2.Two Story Fram
3.Three Story Fr
4.1 & 1/2 Story
5.1 & 3/4 Story
6.2 & 1/2 Story
21.Open Frame Por
22.Encl Frame Por
23.Frame Garage
24.Frame Shed
25.Frame Bay Wind
26.1SFr Overhang
27.Unfin Basement
28.Unfinished Att
29.Finished Attic

Map Lot 010-018C | Account 287 | Location 62 STORY STREET | Card 1 Of 1 | 12/09/2022

COREY, DEBRA A
DICKINSON, GERALD V
62 STORY STREET
WASHBURN ME 04786

B5822P228

Property Data

Neighborhood **1 Neighborhood One**

Tree Growth Year **0**

1ST MORTGAGE **0**

2ND MORTGAGE **0**

Zone/Land Use **1 Residential**

Secondary Zone

Topography **1 Level**

1.Level	4.Below St	7.LevelBog
2.Rolling	5.Low	8.
3.Above St	6.Swampy	9.

Utilities **4 Drilled Well** **3 Public Sewer**

1.Public	4.Dr Well	7.Cesspool
2.Water	5.Dug Well	8.
3.Sewer	6.Septic	9.None

Street **1 Paved**

1.Paved	4.Proposed	7.
2.Semi Imp	5.R/O/W	8.
3.Gravel	6.	9.None

TG PLAN YEAR **0**

Tif District # **0**

Sale Data

Sale Date **9/19/2018**

Price

Sale Type **2 Land & Buildings**

1.Land	4.Mobile	7.C/I L&B
2.L & B	5.Other	8.
3.Building	6.C/I Land	9.

Financing **1 Conventional**

1.Convent	4.Seller	7.
2.FHA/VA	5.Private	8.
3.Assumed	6.Cash	9.Unknown

Validity **2 Related Parties**

1.Valid	4.Split	7.Renovate
2.Related	5.Partial	8.Other
3.Distress	6.Exempt	9.

Verified **5 Public Record**

1.Buyer	4.Agent	7.Family
2.Seller	5.Pub Rec	8.Other
3.Lender	6.MLS	9.

Assessment Record

Year	Land	Buildings	Exempt	Total
2009	9,600	50,000	14,400	45,200
2012	9,600	50,000	14,080	45,520
2013	12,400	50,000	14,080	48,320
2015	12,400	50,000	14,400	48,000
2018	12,400	50,000	23,920	38,480
2019	18,600	56,300	26,000	48,900
2020	18,600	55,100	31,000	42,700
2021	18,600	56,300	31,000	43,900
2022	18,600	59,100	31,000	46,700

Land Data

Front Foot	Type	Effective Frontage	Effective Depth	Influence Factor	Influence Code
11.Regular Lot				%	
12.Delta Triangle				%	
13.Nabla Triangle				%	
14.Rear Land				%	
15.Class I Road				%	
				%	
				%	
Square Foot		**Square Feet**			
16.Class II Road	29	800		100 %	0
17.Municipal Rese				%	
18.Munic Sep Lago				%	
19.Gravel Pit				%	
20.Industrial Bas				%	
				%	
				%	
Fract. Acre		**Acreage/Sites**			
21.Developed Pave	21	1.00		100 %	0
22.Undev Paved (F	28	0.13		100 %	0
23.Developed Grav				%	
Acres				%	
24.Undev Gravel (				%	
25.Comm Base Pave				%	
26.Comm Base Grav				%	
27.Backlot				%	
28.Rear Land				%	
29.Pavement				%	

Total Acreage 1.13

Influence Codes

1.Unimproved
2.Excess Frtg
3.Topography
4.Size/Shape
5.Access
6.Restriction
7.Open Space
8.View/Environ
9.Fract Share
Acres
30.Utility R O W
31.Tillable
32.Pasture
33.Orchard
34.Softwood F&O
35.Mixed Wood F&O
36.Hardwood F&O
37.Softwood TG
38.Mixed Wood TG
39.Hardwood TG
40.Wasteland
41.Open Space
42.Mobile Home Si
43.Condo Site
44.Lot Improvemen
45.Subdivision Lo
46.Heavy Ind Sit

Inspection Witnessed By:

X Date

No./Date	Description	Date Insp.

Notes:
*2-15-2019 DW HUD #'s NTA 1282349 and NTA 1282350

Washburn

Washburn

Map Lot 010-018C | Account 287 | Location 62 STORY STREET | Card 1 Of 1 | 12/09/2022

Building Style **0**		
1.Conv.	5.Garrison	9.Gambrel
2.Ranch	6.Salt Box	10.Other
3.R Ranch	7.Contemp	11.Split
4.Cape	8.Log	12.
Dwelling Units **0**		
Other Units **0**		
Stories **0**		
1.1	4.1.5	7.
2.2	5.1.75	8.
3.3	6.2.5	9.
Exterior Walls **0**		
1.Wood	5.Stucco	9.T-111
2.Vin/Al	6.Brick	10.Other
3.Compos.	7.Stone	11.
4.Asbestos	8.Concrete	12.
Roof Surface **0**		
1.Asphalt	4.Composit	7.
2.Slate	5.Wood	8.
3.Metal	6.Other	9.
SF Masonry Trim **0**		
OPEN-3-CUSTOM **0**		
OPEN-4-CUSTOM **0**		
Year Built **0**		
Year Remodeled **0**		
Foundation **0**		
1.Concrete	4.Wood	7.
2.C Block	5.Slab	8.
3.Br/Stone	6.Piers	9.
Basement **0**		
1.1/4 Bmt	4.Full Bmt	7.
2.1/2 Bmt	5.None	8.
3.3/4 Bmt	6.	9.None
Bsmt Gar # Cars **0**		
Wet Basement **0**		
1.Dry	4.	7.
2.Damp	5.	8.
3.Wet	6.	9.

SF Bsmt Living **0**		
Fin Bsmt Grade **0 0**		
OPEN 5 OPTIONAL **0**		
Heat Type **100%** **0**		
1.HWBB	5.FWA	9.No Heat
2.HWCI	6.GravWA	10.
3.H Pump	7.Electric	11.
4.Steam	8.Fl/Wall	12.
Cool Type **0%** **9 None**		
1.Refrig	4.W&C Air	7.
2.Evapor	5.	8.
3.H Pump	6.	9.None
Kitchen Style **0**		
1.Modern	4.Obsolete	7.
2.Typical	5.	8.
3.Old Type	6.	9.None
Bath(s) Style **0**		
1.Modern	4.Obsolete	7.
2.Typical	5.	8.
3.Old Type	6.	9.None
# Rooms **0**		
# Bedrooms **0**		
# Full Baths **0**		
# Half Baths **0**		
# Addn Fixtures **0**		
# Fireplaces **0**		

TRIO Software
A Division of Harris Computer Systems

Layout **0**		
1.Typical	4.	7.
2.Inadeq	5.	8.
3.Poor	6.	9.
Attic **0**		
1.1/4 Fin	4.Full Fin	7.
2.1/2 Fin	5.Fl/Stair	8.
3.3/4 Fin	6.	9.None
Insulation **0**		
1.Full	4.Minimal	7.
2.Heavy	5.Partial	8.
3.Capped	6.	9.None
Unfinished % **0%**		
Grade & Factor **0 0%**		
1.E Grade	4.B Grade	7.
2.D Grade	5.A Grade	8.SC Grade
3.C Grade	6.AA Grade	9.Same
SQFT (Footprint) **0**		
Condition **0**		
1.Poor	4.Avg	7.V G
2.Fair	5.Avg+	8.Exc
3.Avg-	6.Good	9.Same
Phys. % Good **0%**		
Funct. % Good **100%**		
Functional Code **9 None**		
1.Incomp	4.Delap	7.No Power
2.O-Built	5.Bsmt	8.LongTerm
3.Damage	6.Common	9.None
Econ. % Good **100%**		
Economic Code **None**		
0.None	3.No Power	7.
1.Location	4.Generate	8.
2.Encroach	9.None	9.
Entrance Code **5 Estimated**		
1.Interior	4.Vacant	7.
2.Refusal	5.Estimate	8.
3.Informed	6.Reviewed	9.
Information Code **5 Estimate**		
1.Owner	4.Agent	7.
2.Relative	5.Estimate	8.
3.Tenant	6.Other	9.

Date Inspected 10/01/2018

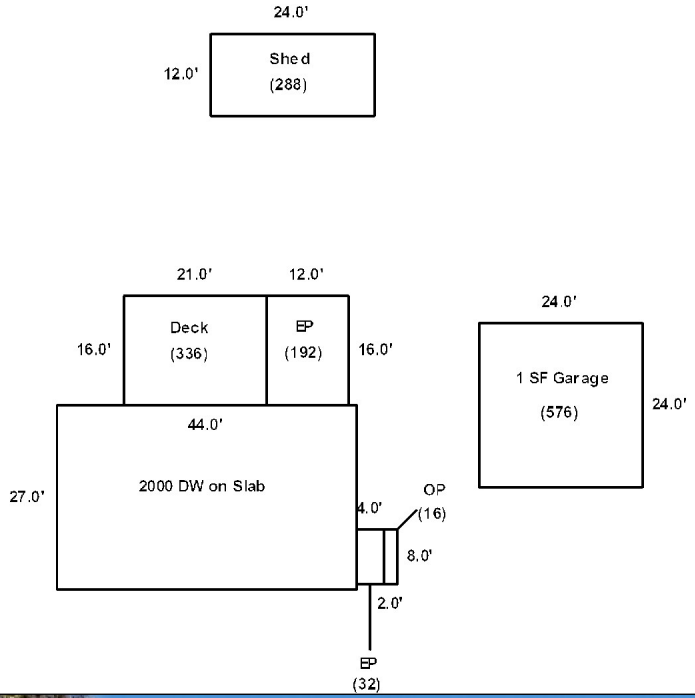

Additions, Outbuildings & Improvements

Type	Year	Units	Grade	Cond	Phys.	Funct.	Sound Value
992 Double Wide	2000	27x44	4 100	7	0 %	100 %	
48 Concrete Slab	2000	1188	3 100	4	0 %	100 %	
22 Encl Frame Porch	2000	32	2 110	4	0 %	100 %	
21 Open Frame	2016	16	2 100	4	0 %	100 %	
22 Encl Frame Porch	2000	192	2 110	4	0 %	100 %	
68 Wood Deck	2000	336	3 100	4	0 %	100 %	
23 Frame Garage	2000	576	3 100	4	0 %	100 %	
24 Frame Shed	2005	288	2 115	4	0 %	100 %	
					%	%	
					%	%	

1.One Story Fram
2.Two Story Fram
3.Three Story Fr
4.1 & 1/2 Story
5.1 & 3/4 Story
6.2 & 1/2 Story
21.Open Frame Por
22.Encl Frame Por
23.Frame Garage
24.Frame Shed
25.Frame Bay Wind
26.1SFr Overhang
27.Unfin Basement
28.Unfinished Att
29.Finished Attic

Map Lot 010-019 Account 774 Location 144 HINES STREET Card 1 Of 1 12/09/2022

MILTON, GARY A SR
MILTON, KAREN M
PO BOX 205
WASHBURN ME 04786

B2402P227 B4690P111 B5239P299 B5284P321

Property Data

Neighborhood **1 Neighborhood One**

Tree Growth Year **0**

1ST MORTGAGE **0**

2ND MORTGAGE **0**

Zone/Land Use **1 Residential**

Secondary Zone

Topography **1 Level**

1.Level	4.Below St	7.LevelBog
2.Rolling	5.Low	8.
3.Above St	6.Swampy	9.

Utilities **4 Drilled Well** **3 Public Sewer**

1.Public	4.Dr Well	7.Cesspool
2.Water	5.Dug Well	8.
3.Sewer	6.Septic	9.None

Street **1 Paved**

1.Paved	4.Proposed	7.
2.Semi Imp	5.R/O/W	8.
3.Gravel	6.	9.None

TG PLAN YEAR **0**

Tif District # **0**

Sale Data

Sale Date **10/22/1991**

Price **38,500**

Sale Type **2 Land & Buildings**

1.Land	4.Mobile	7.C/I L&B
2.L & B	5.Other	8.
3.Building	6.C/I Land	9.

Financing **1 Conventional**

1.Convent	4.Seller	7.
2.FHA/VA	5.Private	8.
3.Assumed	6.Cash	9.Unknown

Validity **1 Arms Length Sale**

1.Valid	4.Split	7.Renovate
2.Related	5.Partial	8.Other
3.Distress	6.Exempt	9.

Verified **5 Public Record**

1.Buyer	4.Agent	7.Family
2.Seller	5.Pub Rec	8.Other
3.Lender	6.MLS	9.

Assessment Record

Year	Land	Buildings	Exempt	Total
2009	3,500	52,400	9,000	46,900
2012	3,500	52,400	8,800	47,100
2013	4,500	52,400	8,800	48,100
2015	4,500	52,400	9,000	47,900
2018	4,500	52,400	18,400	38,500
2019	9,400	54,300	20,000	43,700
2020	9,400	54,300	25,000	38,700
2021	9,400	54,300	25,000	38,700
2022	9,400	57,000	25,000	41,400

Land Data

Front Foot	Type	Effective Frontage	Effective Depth	Influence Factor	Influence Code
11.Regular Lot				%	
12.Delta Triangle				%	
13.Nabla Triangle				%	
14.Rear Land				%	
15.Class I Road				%	
				%	
				%	
Square Foot		**Square Feet**			
16.Class II Road	29	600		75 %	0
17.Municipal Rese				%	
18.Munic Sep Lago				%	
19.Gravel Pit				%	
20.Industrial Bas				%	
				%	
				%	
Fract. Acre		**Acreage/Sites**			
21.Developed Pave	21	0.25		100 %	0
22.Undev Paved (F				%	
23.Developed Grav				%	
Acres				%	
24.Undev Gravel (				%	
25.Comm Base Pave				%	
26.Comm Base Grav				%	
27.Backlot				%	
28.Rear Land				%	
29.Pavement				%	

Total Acreage 0.25

Influence Codes

1.Unimproved
2.Excess Frtg
3.Topography
4.Size/Shape
5.Access
6.Restriction
7.Open Space
8.View/Environ
9.Fract Share
Acres
30.Utility R O W
31.Tillable
32.Pasture
33.Orchard
34.Softwood F&O
35.Mixed Wood F&O
36.Hardwood F&O
37.Softwood TG
38.Mixed Wood TG
39.Hardwood TG
40.Wasteland
41.Open Space
42.Mobile Home Si
43.Condo Site
44.Lot Improvemen
45.Subdivision Lo
46.Heavy Ind Sit

Inspection Witnessed By:

X Date

No./Date	Description	Date Insp.

Notes:
*2-15-2019 -10% for attached garage.

Washburn

Washburn

Map Lot 010-019 | Account 774 | Location 144 HINES STREET | Card 1 Of 1 | 12/09/2022

Building Style	**6 Salt Box**		
1.Conv.	5.Garrison	9.Gambrel	
2.Ranch	6.Salt Box	10.Other	
3.R Ranch	7.Contemp	11.Split	
4.Cape	8.Log	12.	
Dwelling Units	**1**		
Other Units	**0**		
Stories	**5 One & 3/4 Story**		
1.1	4.1.5	7.	
2.2	5.1.75	8.	
3.3	6.2.5	9.	
Exterior Walls	**2 Vinyl/Aluminum**		
1.Wood	5.Stucco	9.T-111	
2.Vin/Al	6.Brick	10.Other	
3.Compos.	7.Stone	11.	
4.Asbestos	8.Concrete	12.	
Roof Surface	**1 Asphalt Shingles**		
1.Asphalt	4.Composit	7.	
2.Slate	5.Wood	8.	
3.Metal	6.Other	9.	
SF Masonry Trim	**0**		
OPEN-3-CUSTOM	**0**		
OPEN-4-CUSTOM	**0**		
Year Built	**1950**		
Year Remodeled	**0**		
Foundation	**3 Brick &/or Stone**		
1.Concrete	4.Wood	7.	
2.C Block	5.Slab	8.	
3.Br/Stone	6.Piers	9.	
Basement	**4 Full Basement**		
1.1/4 Bmt	4.Full Bmt	7.	
2.1/2 Bmt	5.None	8.	
3.3/4 Bmt	6.	9.None	
Bsmt Gar # Cars	**0**		
Wet Basement	**2 Damp Basement**		
1.Dry	4.	7.	
2.Damp	5.	8.	
3.Wet	6.	9.	

SF Bsmt Living	**0**		
Fin Bsmt Grade	**0 0**		
OPEN 5 OPTIONAL	**0**		
Heat Type	**100%**	**8 Floor/Wall Unit**	
1.HWBB	5.FWA	9.No Heat	
2.HWCI	6.GravWA	10.	
3.H Pump	7.Electric	11.	
4.Steam	8.Fl/Wall	12.	
Cool Type	**50%**	**3 Heat Pump**	
1.Refrig	4.W&C Air	7.	
2.Evapor	5.	8.	
3.H Pump	6.	9.None	
Kitchen Style	**2 Typical**		
1.Modern	4.Obsolete	7.	
2.Typical	5.	8.	
3.Old Type	6.	9.None	
Bath(s) Style	**2 Typical Bath(s)**		
1.Modern	4.Obsolete	7.	
2.Typical	5.	8.	
3.Old Type	6.	9.None	
# Rooms	**5**		
# Bedrooms	**2**		
# Full Baths	**1**		
# Half Baths	**0**		
# Addn Fixtures	**0**		
# Fireplaces	**0**		

TRIO Software
A Division of Harris Computer Systems

Layout	**1 Typical**		
1.Typical	4.	7.	
2.Inadeq	5.	8.	
3.Poor	6.	9.	
Attic	**9 None**		
1.1/4 Fin	4.Full Fin	7.	
2.1/2 Fin	5.Fl/Stair	8.	
3.3/4 Fin	6.	9.None	
Insulation	**1 Full**		
1.Full	4.Minimal	7.	
2.Heavy	5.Partial	8.	
3.Capped	6.	9.None	
Unfinished %	**0%**		
Grade & Factor	**2 Fair 110%**		
1.E Grade	4.B Grade	7.	
2.D Grade	5.A Grade	8.SC Grade	
3.C Grade	6.AA Grade	9.Same	
SQFT (Footprint)	**780**		
Condition	**5 Above Average**		
1.Poor	4.Avg	7.V G	
2.Fair	5.Avg+	8.Exc	
3.Avg-	6.Good	9.Same	
Phys. % Good	**0%**		
Funct. % Good	**100%**		
Functional Code	**9 None**		
1.Incomp	4.Delap	7.No Power	
2.O-Built	5.Bsmt	8.LongTerm	
3.Damage	6.Common	9.None	
Econ. % Good	**100%**		
Economic Code	**None**		
0.None	3.No Power	7.	
1.Location	4.Generate	8.	
2.Encroach	9.None	9.	
Entrance Code	**5 Estimated**		
1.Interior	4.Vacant	7.	
2.Refusal	5.Estimate	8.	
3.Informed	6.Reviewed	9.	
Information Code	**5 Estimate**		
1.Owner	4.Agent	7.	
2.Relative	5.Estimate	8.	
3.Tenant	6.Other	9.	

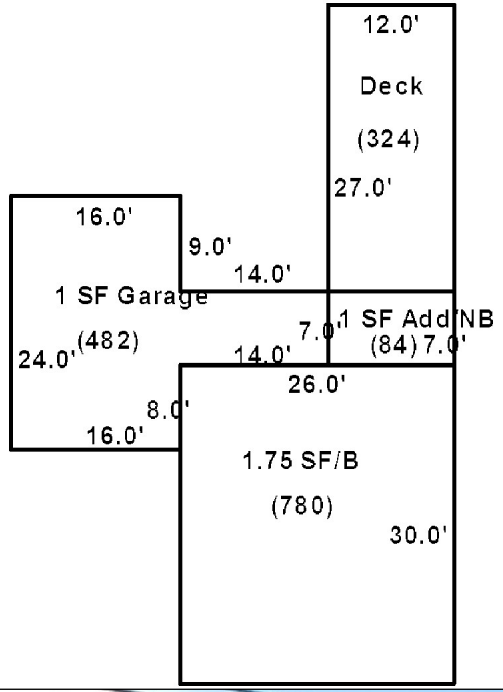

Date Inspected 10/01/2018

Additions, Outbuildings & Improvements

Type	Year	Units	Grade	Cond	Phys.	Funct.	Sound Value
1 One Story Frame	1980	84	3 100	4	0 %	100 %	
68 Wood Deck	2000	324	2 115	3	0 %	100 %	
23 Frame Garage	1965	482	3 90	4	0 %	90 %	
					%	%	
					%	%	
					%	%	
					%	%	
					%	%	
					%	%	
					%	%	

1.One Story Fram
2.Two Story Fram
3.Three Story Fr
4.1 & 1/2 Story
5.1 & 3/4 Story
6.2 & 1/2 Story
21.Open Frame Por
22.Encl Frame Por
23.Frame Garage
24.Frame Shed
25.Frame Bay Wind
26.1SFr Overhang
27.Unfin Basement
28.Unfinished Att
29.Finished Attic

Map Lot 010-019A | Account 775 | Location HINES STREET | Card 1 Of 1 | 12/09/2022

MILTON, GARY A
MILTON, KAREN M
P.O. BOX 205
WASHBURN ME 04786

B2402P227 B2402P229 B4690P111

Property Data

Neighborhood **1 Neighborhood One**

Tree Growth Year **0**

1ST MORTGAGE **0**

2ND MORTGAGE **0**

Zone/Land Use **1 Residential**

Secondary Zone

Topography **1 Level**

1.Level	4.Below St	7.LevelBog
2.Rolling	5.Low	8.
3.Above St	6.Swampy	9.

Utilities

1.Public	4.Dr Well	7.Cesspool
2.Water	5.Dug Well	8.
3.Sewer	6.Septic	9.None

Street **1 Paved**

1.Paved	4.Proposed	7.
2.Semi Imp	5.R/O/W	8.
3.Gravel	6.	9.None

TG PLAN YEAR **0**

Tif District # **0**

Sale Data

Sale Date **10/22/1991**

Price

Sale Type **1 Land Only**

1.Land	4.Mobile	7.C/I L&B
2.L & B	5.Other	8.
3.Building	6.C/I Land	9.

Financing **1 Conventional**

1.Convent	4.Seller	7.
2.FHA/VA	5.Private	8.
3.Assumed	6.Cash	9.Unknown

Validity **1 Arms Length Sale**

1.Valid	4.Split	7.Renovate
2.Related	5.Partial	8.Other
3.Distress	6.Exempt	9.

Verified **5 Public Record**

1.Buyer	4.Agent	7.Family
2.Seller	5.Pub Rec	8.Other
3.Lender	6.MLS	9.

Assessment Record

Year	Land	Buildings	Exempt	Total
2009	500	0	0	500
2012	500	0	0	500
2013	700	0	0	700
2015	700	0	0	700
2018	700	0	0	700
2019	1,200	0	0	1,200
2020	1,200	0	0	1,200
2021	1,200	0	0	1,200
2022	1,200	0	0	1,200

Land Data

Front Foot	Type	Effective Frontage	Effective Depth	Influence Factor	Influence Code
11.Regular Lot				%	
12.Delta Triangle				%	
13.Nabla Triangle				%	
14.Rear Land				%	
15.Class I Road				%	
				%	
				%	
Square Foot		**Square Feet**			
16.Class II Road				%	
17.Municipal Rese				%	
18.Munic Sep Lago				%	
19.Gravel Pit				%	
20.Industrial Bas				%	
				%	
				%	
Fract. Acre		**Acreage/Sites**			
21.Developed Pave	22	0.07		50 %	0
22.Undev Paved (F				%	
23.Developed Grav				%	
Acres				%	
24.Undev Gravel (				%	
25.Comm Base Pave				%	
26.Comm Base Grav				%	
27.Backlot				%	
28.Rear Land				%	
29.Pavement				%	

Total Acreage 0.07

Influence Codes

1.Unimproved
2.Excess Frtg
3.Topography
4.Size/Shape
5.Access
6.Restriction
7.Open Space
8.View/Environ
9.Fract Share
Acres
30.Utility R O W
31.Tillable
32.Pasture
33.Orchard
34.Softwood F&O
35.Mixed Wood F&O
36.Hardwood F&O
37.Softwood TG
38.Mixed Wood TG
39.Hardwood TG
40.Wasteland
41.Open Space
42.Mobile Home Si
43.Condo Site
44.Lot Improvemen
45.Subdivision Lo
46.Heavy Ind Sit

Inspection Witnessed By:

X Date

No./Date	Description	Date Insp.

Notes:

* Baselot assessed at 50% influence due to lot being unbuildable.

Washburn

Washburn

Map Lot 010-019A | Account 775 | Location HINES STREET | Card 1 Of 1 | 12/09/2022

Building Style **0**		
1.Conv.	5.Garrison	9.Gambrel
2.Ranch	6.Salt Box	10.Other
3.R Ranch	7.Contemp	11.Split
4.Cape	8.Log	12.
Dwelling Units **0**		
Other Units **0**		
Stories **0**		
1.1	4.1.5	7.
2.2	5.1.75	8.
3.3	6.2.5	9.
Exterior Walls **0**		
1.Wood	5.Stucco	9.T-111
2.Vin/Al	6.Brick	10.Other
3.Compos.	7.Stone	11.
4.Asbestos	8.Concrete	12.
Roof Surface **0**		
1.Asphalt	4.Composit	7.
2.Slate	5.Wood	8.
3.Metal	6.Other	9.
SF Masonry Trim **0**		
OPEN-3-CUSTOM **0**		
OPEN-4-CUSTOM **0**		
Year Built **0**		
Year Remodeled **0**		
Foundation **0**		
1.Concrete	4.Wood	7.
2.C Block	5.Slab	8.
3.Br/Stone	6.Piers	9.
Basement **0**		
1.1/4 Bmt	4.Full Bmt	7.
2.1/2 Bmt	5.None	8.
3.3/4 Bmt	6.	9.None
Bsmt Gar # Cars **0**		
Wet Basement **0**		
1.Dry	4.	7.
2.Damp	5.	8.
3.Wet	6.	9.

SF Bsmt Living **0**		
Fin Bsmt Grade **0 0**		
OPEN 5 OPTIONAL **0**		
Heat Type **100%** **0**		
1.HWBB	5.FWA	9.No Heat
2.HWCI	6.GravWA	10.
3.H Pump	7.Electric	11.
4.Steam	8.Fl/Wall	12.
Cool Type **0%** **9 None**		
1.Refrig	4.W&C Air	7.
2.Evapor	5.	8.
3.H Pump	6.	9.None
Kitchen Style **0**		
1.Modern	4.Obsolete	7.
2.Typical	5.	8.
3.Old Type	6.	9.None
Bath(s) Style **0**		
1.Modern	4.Obsolete	7.
2.Typical	5.	8.
3.Old Type	6.	9.None
# Rooms **0**		
# Bedrooms **0**		
# Full Baths **0**		
# Half Baths **0**		
# Addn Fixtures **0**		
# Fireplaces **0**		

TRIO Software
A Division of Harris Computer Systems

Layout **0**		
1.Typical	4.	7.
2.Inadeq	5.	8.
3.Poor	6.	9.
Attic **0**		
1.1/4 Fin	4.Full Fin	7.
2.1/2 Fin	5.Fl/Stair	8.
3.3/4 Fin	6.	9.None
Insulation **0**		
1.Full	4.Minimal	7.
2.Heavy	5.Partial	8.
3.Capped	6.	9.None
Unfinished % **0%**		
Grade & Factor **0 0%**		
1.E Grade	4.B Grade	7.
2.D Grade	5.A Grade	8.SC Grade
3.C Grade	6.AA Grade	9.Same
SQFT (Footprint) **0**		
Condition **0**		
1.Poor	4.Avg	7.V G
2.Fair	5.Avg+	8.Exc
3.Avg-	6.Good	9.Same
Phys. % Good **0%**		
Funct. % Good **100%**		
Functional Code **9 None**		
1.Incomp	4.Delap	7.No Power
2.O-Built	5.Bsmt	8.LongTerm
3.Damage	6.Common	9.None
Econ. % Good **100%**		
Economic Code **None**		
0.None	3.No Power	7.
1.Location	4.Generate	8.
2.Encroach	9.None	9.
Entrance Code **0**		
1.Interior	4.Vacant	7.
2.Refusal	5.Estimate	8.
3.Informed	6.Reviewed	9.
Information Code **0**		
1.Owner	4.Agent	7.
2.Relative	5.Estimate	8.
3.Tenant	6.Other	9.

Date Inspected

Additions, Outbuildings & Improvements

Type	Year	Units	Grade	Cond	Phys.	Funct.	Sound Value
					%	%	
					%	%	
					%	%	
					%	%	
					%	%	
					%	%	
					%	%	
					%	%	
					%	%	
					%	%	

1.One Story Fram
2.Two Story Fram
3.Three Story Fr
4.1 & 1/2 Story
5.1 & 3/4 Story
6.2 & 1/2 Story
21.Open Frame Por
22.Encl Frame Por
23.Frame Garage
24.Frame Shed
25.Frame Bay Wind
26.1SFr Overhang
27.Unfin Basement
28.Unfinished Att
29.Finished Attic

Map Lot 010-019B | Account 770 | Location HINES STREET | Card 1 Of 1 | 12/09/2022

MILTON, GARY A
MILTON, KAREN M
P.O. BOX 205
WASHBURN ME 04786

B2828P208

Property Data

Neighborhood	**1 Neighborhood One**
Tree Growth Year	**0**
1ST MORTGAGE	**0**
2ND MORTGAGE	**0**
Zone/Land Use	**1 Residential**
Secondary Zone	
Topography	**1 Level**

1.Level	4.Below St	7.LevelBog
2.Rolling	5.Low	8.
3.Above St	6.Swampy	9.

Utilities

1.Public	4.Dr Well	7.Cesspool
2.Water	5.Dug Well	8.
3.Sewer	6.Septic	9.None

Street **1 Paved**

1.Paved	4.Proposed	7.
2.Semi Imp	5.R/O/W	8.
3.Gravel	6.	9.None

TG PLAN YEAR	**0**
Tif District #	**0**

Sale Data

Sale Date	**9/07/1995**
Price	
Sale Type	**1 Land Only**

1.Land	4.Mobile	7.C/I L&B
2.L & B	5.Other	8.
3.Building	6.C/I Land	9.

Financing

1.Convent	4.Seller	7.
2.FHA/VA	5.Private	8.
3.Assumed	6.Cash	9.Unknown

Validity **1 Arms Length Sale**

1.Valid	4.Split	7.Renovate
2.Related	5.Partial	8.Other
3.Distress	6.Exempt	9.

Verified **5 Public Record**

1.Buyer	4.Agent	7.Family
2.Seller	5.Pub Rec	8.Other
3.Lender	6.MLS	9.

Assessment Record

Year	Land	Buildings	Exempt	Total
2009	6,400	0	0	6,400
2012	6,400	0	0	6,400
2013	8,300	0	0	8,300
2015	8,300	0	0	8,300
2018	8,300	0	0	8,300
2019	6,700	1,500	0	8,200
2020	6,700	1,500	0	8,200
2021	6,700	1,500	0	8,200
2022	6,700	1,500	0	8,200

Land Data

Front Foot	Type	Effective Frontage	Effective Depth	Influence Factor	Influence Code
11.Regular Lot				%	
12.Delta Triangle				%	
13.Nabla Triangle				%	
14.Rear Land				%	
15.Class I Road				%	
				%	
				%	
Square Foot		**Square Feet**			
16.Class II Road				%	
17.Municipal Rese				%	
18.Munic Sep Lago				%	
19.Gravel Pit				%	
20.Industrial Bas				%	
				%	
				%	
Fract. Acre		**Acreage/Sites**			
21.Developed Pave	22	0.55		100 %	0
22.Undev Paved (F				%	
23.Developed Grav				%	
Acres				%	
24.Undev Gravel (				%	
25.Comm Base Pave				%	
26.Comm Base Grav				%	
27.Backlot				%	
28.Rear Land				%	
29.Pavement				%	

Total Acreage 0.55

Influence Codes

1.Unimproved
2.Excess Frtg
3.Topography
4.Size/Shape
5.Access
6.Restriction
7.Open Space
8.View/Environ
9.Fract Share
Acres
30.Utility R O W
31.Tillable
32.Pasture
33.Orchard
34.Softwood F&O
35.Mixed Wood F&O
36.Hardwood F&O
37.Softwood TG
38.Mixed Wood TG
39.Hardwood TG
40.Wasteland
41.Open Space
42.Mobile Home Si
43.Condo Site
44.Lot Improvemen
45.Subdivision Lo
46.Heavy Ind Sit

Inspection Witnessed By:

X Date

No./Date	Description	Date Insp.

Notes:

Washburn

Washburn

Map Lot 010-019B | Account 770 | Location HINES STREET | Card 1 Of 1 | 12/09/2022

Building Style **0**		
1.Conv.	5.Garrison	9.Gambrel
2.Ranch	6.Salt Box	10.Other
3.R Ranch	7.Contemp	11.Split
4.Cape	8.Log	12.
Dwelling Units **0**		
Other Units **0**		
Stories **0**		
1.1	4.1.5	7.
2.2	5.1.75	8.
3.3	6.2.5	9.
Exterior Walls **0**		
1.Wood	5.Stucco	9.T-111
2.Vin/Al	6.Brick	10.Other
3.Compos.	7.Stone	11.
4.Asbestos	8.Concrete	12.
Roof Surface **0**		
1.Asphalt	4.Composit	7.
2.Slate	5.Wood	8.
3.Metal	6.Other	9.
SF Masonry Trim **0**		
OPEN-3-CUSTOM **0**		
OPEN-4-CUSTOM **0**		
Year Built **0**		
Year Remodeled **0**		
Foundation **0**		
1.Concrete	4.Wood	7.
2.C Block	5.Slab	8.
3.Br/Stone	6.Piers	9.
Basement **0**		
1.1/4 Bmt	4.Full Bmt	7.
2.1/2 Bmt	5.None	8.
3.3/4 Bmt	6.	9.None
Bsmt Gar # Cars **0**		
Wet Basement **0**		
1.Dry	4.	7.
2.Damp	5.	8.
3.Wet	6.	9.

SF Bsmt Living **0**		
Fin Bsmt Grade **0 0**		
OPEN 5 OPTIONAL **0**		
Heat Type **100%** **0**		
1.HWBB	5.FWA	9.No Heat
2.HWCI	6.GravWA	10.
3.H Pump	7.Electric	11.
4.Steam	8.Fl/Wall	12.
Cool Type **0%** **9 None**		
1.Refrig	4.W&C Air	7.
2.Evapor	5.	8.
3.H Pump	6.	9.None
Kitchen Style **0**		
1.Modern	4.Obsolete	7.
2.Typical	5.	8.
3.Old Type	6.	9.None
Bath(s) Style **0**		
1.Modern	4.Obsolete	7.
2.Typical	5.	8.
3.Old Type	6.	9.None
# Rooms **0**		
# Bedrooms **0**		
# Full Baths **0**		
# Half Baths **0**		
# Addn Fixtures **0**		
# Fireplaces **0**		

TRIO Software
A Division of Harris Computer Systems

Layout **0**		
1.Typical	4.	7.
2.Inadeq	5.	8.
3.Poor	6.	9.
Attic **0**		
1.1/4 Fin	4.Full Fin	7.
2.1/2 Fin	5.Fl/Stair	8.
3.3/4 Fin	6.	9.None
Insulation **0**		
1.Full	4.Minimal	7.
2.Heavy	5.Partial	8.
3.Capped	6.	9.None
Unfinished % **0%**		
Grade & Factor **0 0%**		
1.E Grade	4.B Grade	7.
2.D Grade	5.A Grade	8.SC Grade
3.C Grade	6.AA Grade	9.Same
SQFT (Footprint) **0**		
Condition **0**		
1.Poor	4.Avg	7.V G
2.Fair	5.Avg+	8.Exc
3.Avg-	6.Good	9.Same
Phys. % Good **0%**		
Funct. % Good **100%**		
Functional Code **9 None**		
1.Incomp	4.Delap	7.No Power
2.O-Built	5.Bsmt	8.LongTerm
3.Damage	6.Common	9.None
Econ. % Good **100%**		
Economic Code **None**		
0.None	3.No Power	7.
1.Location	4.Generate	8.
2.Encroach	9.None	9.
Entrance Code **5 Estimated**		
1.Interior	4.Vacant	7.
2.Refusal	5.Estimate	8.
3.Informed	6.Reviewed	9.
Information Code **5 Estimate**		
1.Owner	4.Agent	7.
2.Relative	5.Estimate	8.
3.Tenant	6.Other	9.

20.0'

10.0'

Shed SV $1500

(200)

Date Inspected 10/01/2018

Additions, Outbuildings & Improvements

Type	Year	Units	Grade	Cond	Phys.	Funct.	Sound Value
24 Frame Shed	0				%	%	1,500
					%	%	
					%	%	
					%	%	
					%	%	
					%	%	
					%	%	
					%	%	
					%	%	
					%	%	

1.One Story Fram
2.Two Story Fram
3.Three Story Fr
4.1 & 1/2 Story
5.1 & 3/4 Story
6.2 & 1/2 Story
21.Open Frame Por
22.Encl Frame Por
23.Frame Garage
24.Frame Shed
25.Frame Bay Wind
26.1SFr Overhang
27.Unfin Basement
28.Unfinished Att
29.Finished Attic

Map Lot 010-020 Account 919 Location 139 HINES STREET Card 1 Of 1 12/09/2022

TILLEY, ALTON R JR
139 HINES STREET
WASHBURN ME 04786

B3951P110 B5503P102

Property Data

Neighborhood **1 Neighborhood One**

Tree Growth Year **0**

1ST MORTGAGE **0**

2ND MORTGAGE **0**

Zone/Land Use **1 Residential**

Secondary Zone

Topography **2 Rolling**

1.Level	4.Below St	7.LevelBog
2.Rolling	5.Low	8.
3.Above St	6.Swampy	9.

Utilities **2 Public Water** **3 Public Sewer**

1.Public	4.Dr Well	7.Cesspool
2.Water	5.Dug Well	8.
3.Sewer	6.Septic	9.None

Street **1 Paved**

1.Paved	4.Proposed	7.
2.Semi Imp	5.R/O/W	8.
3.Gravel	6.	9.None

TG PLAN YEAR **0**

Tif District # **0**

Sale Data

Sale Date **11/14/2001**

Price **55,000**

Sale Type **2 Land & Buildings**

1.Land	4.Mobile	7.C/I L&B
2.L & B	5.Other	8.
3.Building	6.C/I Land	9.

Financing **1 Conventional**

1.Convent	4.Seller	7.
2.FHA/VA	5.Private	8.
3.Assumed	6.Cash	9.Unknown

Validity **1 Arms Length Sale**

1.Valid	4.Split	7.Renovate
2.Related	5.Partial	8.Other
3.Distress	6.Exempt	9.

Verified **5 Public Record**

1.Buyer	4.Agent	7.Family
2.Seller	5.Pub Rec	8.Other
3.Lender	6.MLS	9.

Assessment Record

Year	Land	Buildings	Exempt	Total
2009	8,400	36,300	9,000	35,700
2012	8,400	36,300	8,800	35,900
2013	10,900	37,300	8,800	39,400
2015	10,900	37,300	9,000	39,200
2018	10,900	37,300	18,400	29,800
2019	17,100	65,500	20,000	62,600
2020	17,100	65,500	25,000	57,600
2021	17,100	65,500	25,000	57,600
2022	17,100	68,700	25,000	60,800

Land Data

Front Foot	Type	Effective Frontage	Effective Depth	Influence Factor	Influence Code
11.Regular Lot				%	
12.Delta Triangle				%	
13.Nabla Triangle				%	
14.Rear Land				%	
15.Class I Road				%	
				%	
				%	
Square Foot		**Square Feet**			
16.Class II Road	29	800		100 %	0
17.Municipal Rese				%	
18.Munic Sep Lago				%	
19.Gravel Pit				%	
20.Industrial Bas				%	
				%	
				%	
Fract. Acre		**Acreage/Sites**			
21.Developed Pave	21	0.54		100 %	0
22.Undev Paved (F	28	5.96		100 %	0
23.Developed Grav				%	
Acres				%	
24.Undev Gravel (				%	
25.Comm Base Pave				%	
26.Comm Base Grav				%	
27.Backlot				%	
28.Rear Land				%	
29.Pavement				%	

Total Acreage 6.50

Influence Codes

1.Unimproved
2.Excess Frtg
3.Topography
4.Size/Shape
5.Access
6.Restriction
7.Open Space
8.View/Environ
9.Fract Share

Acres

30.Utility R O W
31.Tillable
32.Pasture
33.Orchard
34.Softwood F&O
35.Mixed Wood F&O
36.Hardwood F&O
37.Softwood TG
38.Mixed Wood TG
39.Hardwood TG
40.Wasteland
41.Open Space
42.Mobile Home Si
43.Condo Site
44.Lot Improvemen
45.Subdivision Lo
46.Heavy Ind Sit

Inspection Witnessed By:

X Date

No./Date	Description	Date Insp.

Notes:
*2-15-2019 -20% for attached garage.

Washburn

Washburn

Map Lot 010-020 | Account 919 | Location 139 HINES STREET | Card 1 Of 1 | 12/09/2022

Building Style	**4 Cape Cod**		
1.Conv.	5.Garrison	9.Gambrel	
2.Ranch	6.Salt Box	10.Other	
3.R Ranch	7.Contemp	11.Split	
4.Cape	8.Log	12.	
Dwelling Units	**1**		
Other Units	**0**		
Stories	**4 One & 1/2 Story**		
1.1	4.1.5	7.	
2.2	5.1.75	8.	
3.3	6.2.5	9.	
Exterior Walls	**2 Vinyl/Aluminum**		
1.Wood	5.Stucco	9.T-111	
2.Vin/Al	6.Brick	10.Other	
3.Compos.	7.Stone	11.	
4.Asbestos	8.Concrete	12.	
Roof Surface	**1 Asphalt Shingles**		
1.Asphalt	4.Composit	7.	
2.Slate	5.Wood	8.	
3.Metal	6.Other	9.	
SF Masonry Trim	**0**		
OPEN-3-CUSTOM	**0**		
OPEN-4-CUSTOM	**0**		
Year Built	**1950**		
Year Remodeled	**0**		
Foundation	**1 Concrete**		
1.Concrete	4.Wood	7.	
2.C Block	5.Slab	8.	
3.Br/Stone	6.Piers	9.	
Basement	**4 Full Basement**		
1.1/4 Bmt	4.Full Bmt	7.	
2.1/2 Bmt	5.None	8.	
3.3/4 Bmt	6.	9.None	
Bsmt Gar # Cars	**0**		
Wet Basement	**1 Dry Basement**		
1.Dry	4.	7.	
2.Damp	5.	8.	
3.Wet	6.	9.	

SF Bsmt Living	**0**		
Fin Bsmt Grade	**0 0**		
OPEN 5 OPTIONAL	**0**		
Heat Type	**100%**	**1 Hot Water BB**	
1.HWBB	5.FWA	9.No Heat	
2.HWCI	6.GravWA	10.	
3.H Pump	7.Electric	11.	
4.Steam	8.Fl/Wall	12.	
Cool Type	**0%**	**9 None**	
1.Refrig	4.W&C Air	7.	
2.Evapor	5.	8.	
3.H Pump	6.	9.None	
Kitchen Style	**2 Typical**		
1.Modern	4.Obsolete	7.	
2.Typical	5.	8.	
3.Old Type	6.	9.None	
Bath(s) Style	**2 Typical Bath(s)**		
1.Modern	4.Obsolete	7.	
2.Typical	5.	8.	
3.Old Type	6.	9.None	
# Rooms	**6**		
# Bedrooms	**3**		
# Full Baths	**1**		
# Half Baths	**1**		
# Addn Fixtures	**0**		
# Fireplaces	**0**		

TRIO Software
A Division of Harris Computer Systems

Layout	**1 Typical**		
1.Typical	4.	7.	
2.Inadeq	5.	8.	
3.Poor	6.	9.	
Attic	**9 None**		
1.1/4 Fin	4.Full Fin	7.	
2.1/2 Fin	5.Fl/Stair	8.	
3.3/4 Fin	6.	9.None	
Insulation	**1 Full**		
1.Full	4.Minimal	7.	
2.Heavy	5.Partial	8.	
3.Capped	6.	9.None	
Unfinished %	**0%**		
Grade & Factor	**2 Fair 110%**		
1.E Grade	4.B Grade	7.	
2.D Grade	5.A Grade	8.SC Grade	
3.C Grade	6.AA Grade	9.Same	
SQFT (Footprint)	**720**		
Condition	**5 Above Average**		
1.Poor	4.Avg	7.V G	
2.Fair	5.Avg+	8.Exc	
3.Avg-	6.Good	9.Same	
Phys. % Good	**0%**		
Funct. % Good	**100%**		
Functional Code	**9 None**		
1.Incomp	4.Delap	7.No Power	
2.O-Built	5.Bsmt	8.LongTerm	
3.Damage	6.Common	9.None	
Econ. % Good	**100%**		
Economic Code	**None**		
0.None	3.No Power	7.	
1.Location	4.Generate	8.	
2.Encroach	9.None	9.	
Entrance Code	**5 Estimated**		
1.Interior	4.Vacant	7.	
2.Refusal	5.Estimate	8.	
3.Informed	6.Reviewed	9.	
Information Code	**5 Estimate**		
1.Owner	4.Agent	7.	
2.Relative	5.Estimate	8.	
3.Tenant	6.Other	9.	

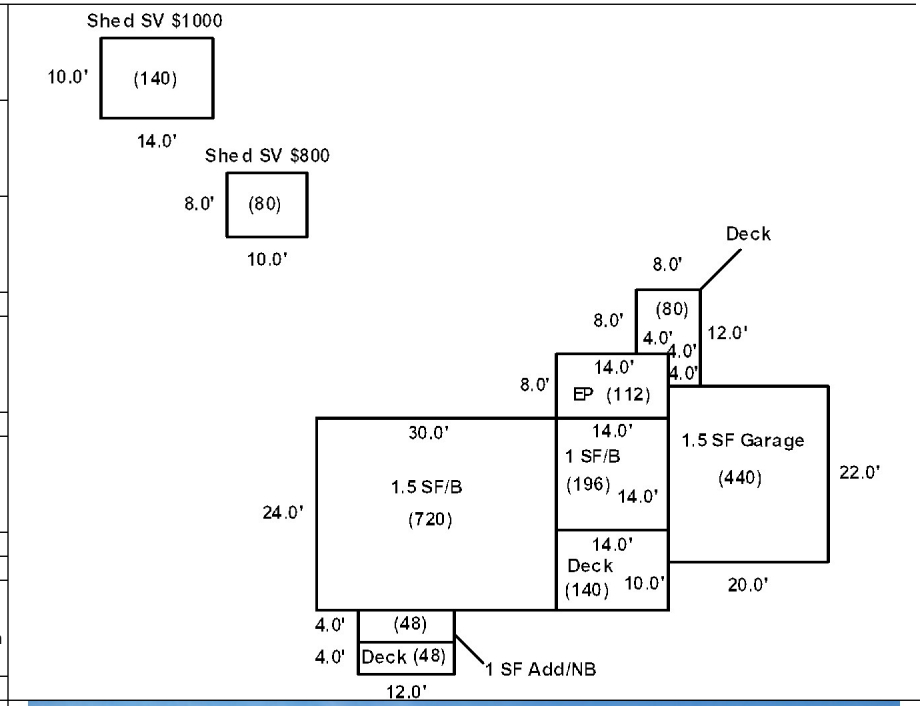

Date Inspected 10/01/2018

Additions, Outbuildings & Improvements

Type	Year	Units	Grade	Cond	Phys.	Funct.	Sound Value
1 One Story Frame	1965	48	3 90	4	0 %	100 %	
68 Wood Deck	1990	48	3 95	3	0 %	100 %	
68 Wood Deck	2000	140	3 100	4	0 %	100 %	
20 1 Story/Bsmt	1950	196	9 100	9	0 %	100 %	
22 Encl Frame Porch	1980	112	2 110	3	0 %	100 %	
68 Wood Deck	1990	80	3 95	3	0 %	100 %	
82 1.5 S-Gar	1965	440	3 100	4	0 %	80 %	
24 Frame Shed	0				%	%	1,000
24 Frame Shed	0				%	%	800
					%	%	

1.One Story Fram
2.Two Story Fram
3.Three Story Fr
4.1 & 1/2 Story
5.1 & 3/4 Story
6.2 & 1/2 Story
21.Open Frame Por
22.Encl Frame Por
23.Frame Garage
24.Frame Shed
25.Frame Bay Wind
26.1SFr Overhang
27.Unfin Basement
28.Unfinished Att
29.Finished Attic

Map Lot 010-020/ON | Account 1116 | Location HINES STREET | Card 1 Of 1 | 12/09/2022

MARTIN, MICHAEL W
23 DUROST DRIVE #C3
WASHBURN ME 04786

Property Data

Neighborhood **1 Neighborhood One**

Tree Growth Year **0**

1ST MORTGAGE **0**

2ND MORTGAGE **0**

Zone/Land Use **1 Residential**

Secondary Zone

Topography **1 Level**

1.Level	4.Below St	7.LevelBog
2.Rolling	5.Low	8.
3.Above St	6.Swampy	9.

Utilities

1.Public	4.Dr Well	7.Cesspool
2.Water	5.Dug Well	8.
3.Sewer	6.Septic	9.None

Street **1 Paved**

1.Paved	4.Proposed	7.
2.Semi Imp	5.R/O/W	8.
3.Gravel	6.	9.None

TG PLAN YEAR **0**

Tif District # **0**

Sale Data

Sale Date

Price

Sale Type **3 Buildings Only**

1.Land	4.Mobile	7.C/I L&B
2.L & B	5.Other	8.
3.Building	6.C/I Land	9.

Financing

1.Convent	4.Seller	7.
2.FHA/VA	5.Private	8.
3.Assumed	6.Cash	9.Unknown

Validity

1.Valid	4.Split	7.Renovate
2.Related	5.Partial	8.Other
3.Distress	6.Exempt	9.

Verified **8 Other Source**

1.Buyer	4.Agent	7.Family
2.Seller	5.Pub Rec	8.Other
3.Lender	6.MLS	9.

Assessment Record

Year	Land	Buildings	Exempt	Total
2013	0	1,900	0	1,900
2015	0	1,900	0	1,900
2018	0	1,900	0	1,900
2020	0	2,000	0	2,000
2021	0	2,000	0	2,000
2022	0	2,000	0	2,000

Land Data

Front Foot	Type	Effective Frontage	Effective Depth	Influence Factor	Influence Code
11.Regular Lot				%	
12.Delta Triangle				%	
13.Nabla Triangle				%	
14.Rear Land				%	
15.Class I Road				%	
				%	
				%	
Square Foot		**Square Feet**			
16.Class II Road				%	
17.Municipal Rese				%	
18.Munic Sep Lago				%	
19.Gravel Pit				%	
20.Industrial Bas				%	
				%	
				%	
Fract. Acre		**Acreage/Sites**			
21.Developed Pave				%	
22.Undev Paved (F				%	
23.Developed Grav				%	
Acres				%	
24.Undev Gravel (				%	
25.Comm Base Pave				%	
26.Comm Base Grav				%	
27.Backlot				%	
28.Rear Land					
29.Pavement		**Total Acreage**		0.00	

Influence Codes

1.Unimproved
2.Excess Frtg
3.Topography
4.Size/Shape
5.Access
6.Restriction
7.Open Space
8.View/Environ
9.Fract Share
Acres
30.Utility R O W
31.Tillable
32.Pasture
33.Orchard
34.Softwood F&O
35.Mixed Wood F&O
36.Hardwood F&O
37.Softwood TG
38.Mixed Wood TG
39.Hardwood TG
40.Wasteland
41.Open Space
42.Mobile Home Si
43.Condo Site
44.Lot Improvemen
45.Subdivision Lo
46.Heavy Ind Sit

Inspection Witnessed By:

X Date

No./Date	Description	Date Insp.

Notes:

*1-4-2019 No building value for 2019 reval. Deleting account due to there being no value associated with it.

Washburn

Washburn

Map Lot 010-020/ON | Account 1116 | Location HINES STREET | Card 1 Of 1 | 12/09/2022

Building Style **0**		
1.Conv.	5.Garrison	9.Gambrel
2.Ranch	6.Salt Box	10.Other
3.R Ranch	7.Contemp	11.Split
4.Cape	8.Log	12.
Dwelling Units **0**		
Other Units **0**		
Stories **0**		
1.1	4.1.5	7.
2.2	5.1.75	8.
3.3	6.2.5	9.
Exterior Walls **0**		
1.Wood	5.Stucco	9.T-111
2.Vin/Al	6.Brick	10.Other
3.Compos.	7.Stone	11.
4.Asbestos	8.Concrete	12.
Roof Surface **0**		
1.Asphalt	4.Composit	7.
2.Slate	5.Wood	8.
3.Metal	6.Other	9.
SF Masonry Trim **0**		
OPEN-3-CUSTOM **0**		
OPEN-4-CUSTOM **0**		
Year Built **0**		
Year Remodeled **0**		
Foundation **0**		
1.Concrete	4.Wood	7.
2.C Block	5.Slab	8.
3.Br/Stone	6.Piers	9.
Basement **0**		
1.1/4 Bmt	4.Full Bmt	7.
2.1/2 Bmt	5.None	8.
3.3/4 Bmt	6.	9.None
Bsmt Gar # Cars **0**		
Wet Basement **0**		
1.Dry	4.	7.
2.Damp	5.	8.
3.Wet	6.	9.

SF Bsmt Living **0**		
Fin Bsmt Grade **0 0**		
OPEN 5 OPTIONAL **0**		
Heat Type **100%** **0**		
1.HWBB	5.FWA	9.No Heat
2.HWCI	6.GravWA	10.
3.H Pump	7.Electric	11.
4.Steam	8.Fl/Wall	12.
Cool Type **0%** **9 None**		
1.Refrig	4.W&C Air	7.
2.Evapor	5.	8.
3.H Pump	6.	9.None
Kitchen Style **0**		
1.Modern	4.Obsolete	7.
2.Typical	5.	8.
3.Old Type	6.	9.None
Bath(s) Style **0**		
1.Modern	4.Obsolete	7.
2.Typical	5.	8.
3.Old Type	6.	9.None
# Rooms **0**		
# Bedrooms **0**		
# Full Baths **0**		
# Half Baths **0**		
# Addn Fixtures **0**		
# Fireplaces **0**		

TRIO Software
A Division of Harris Computer Systems

Layout **0**		
1.Typical	4.	7.
2.Inadeq	5.	8.
3.Poor	6.	9.
Attic **0**		
1.1/4 Fin	4.Full Fin	7.
2.1/2 Fin	5.Fl/Stair	8.
3.3/4 Fin	6.	9.None
Insulation **0**		
1.Full	4.Minimal	7.
2.Heavy	5.Partial	8.
3.Capped	6.	9.None
Unfinished % **0%**		
Grade & Factor **0 0%**		
1.E Grade	4.B Grade	7.
2.D Grade	5.A Grade	8.SC Grade
3.C Grade	6.AA Grade	9.Same
SQFT (Footprint) **0**		
Condition **0**		
1.Poor	4.Avg	7.V G
2.Fair	5.Avg+	8.Exc
3.Avg-	6.Good	9.Same
Phys. % Good **0%**		
Funct. % Good **100%**		
Functional Code **9 None**		
1.Incomp	4.Delap	7.No Power
2.O-Built	5.Bsmt	8.LongTerm
3.Damage	6.Common	9.None
Econ. % Good **100%**		
Economic Code **None**		
0.None	3.No Power	7.
1.Location	4.Generate	8.
2.Encroach	9.None	9.
Entrance Code **0**		
1.Interior	4.Vacant	7.
2.Refusal	5.Estimate	8.
3.Informed	6.Reviewed	9.
Information Code **0**		
1.Owner	4.Agent	7.
2.Relative	5.Estimate	8.
3.Tenant	6.Other	9.

Shed S.V. $2,000

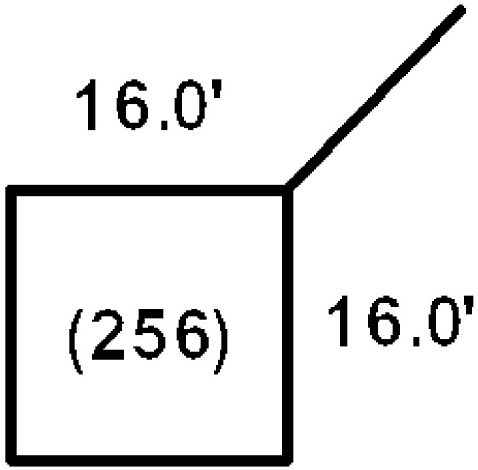

Date Inspected

Additions, Outbuildings & Improvements

Type	Year	Units	Grade	Cond	Phys.	Funct.	Sound Value
24 Frame Shed	1980				%	%	2,000
					%	%	
					%	%	
					%	%	
					%	%	
					%	%	
					%	%	
					%	%	
					%	%	
					%	%	

1.One Story Fram
2.Two Story Fram
3.Three Story Fr
4.1 & 1/2 Story
5.1 & 3/4 Story
6.2 & 1/2 Story
21.Open Frame Por
22.Encl Frame Por
23.Frame Garage
24.Frame Shed
25.Frame Bay Wind
26.1SFr Overhang
27.Unfin Basement
28.Unfinished Att
29.Finished Attic

Map Lot 010-021 | Account 898 | Location 135 HINES STREET | Card 1 Of 1 | 12/09/2022

PARADIS, LELAND R & TERRY L
PARADIS, TYLER
PO BOX 394
WASHBURN ME 04786

B6068P177

Previous Owner
THERIAULT, LARRY D
60 LYNN DRIVE

CARIBOU ME 04736
Sale Date: 9/22/2020

Previous Owner
THERIAULT, NADA C
THERIAULT, LARRY D
60 Lynn Drive
Caribou ME 04736
Sale Date: 9/22/2020

Inspection Witnessed By:

X Date

No./Date	Description	Date Insp.

Notes:

Washburn

Property Data

Neighborhood	**1 Neighborhood One**
Tree Growth Year	**0**
1ST MORTGAGE	**0**
2ND MORTGAGE	**0**
Zone/Land Use	**1 Residential**
Secondary Zone	
Topography	**2 Rolling**

1.Level	4.Below St	7.LevelBog
2.Rolling	5.Low	8.
3.Above St	6.Swampy	9.

Utilities **2 Public Water** **3 Public Sewer**

1.Public	4.Dr Well	7.Cesspool
2.Water	5.Dug Well	8.
3.Sewer	6.Septic	9.None

Street **1 Paved**

1.Paved	4.Proposed	7.
2.Semi Imp	5.R/O/W	8.
3.Gravel	6.	9.None

TG PLAN YEAR	**0**
Tif District #	**0**

Sale Data

Sale Date	**9/22/2020**
Price	**75,000**
Sale Type	**2 Land & Buildings**

1.Land	4.Mobile	7.C/I L&B
2.L & B	5.Other	8.
3.Building	6.C/I Land	9.

Financing **9 Unknown**

1.Convent	4.Seller	7.
2.FHA/VA	5.Private	8.
3.Assumed	6.Cash	9.Unknown

Validity **1 Arms Length Sale**

1.Valid	4.Split	7.Renovate
2.Related	5.Partial	8.Other
3.Distress	6.Exempt	9.

Verified **5 Public Record**

1.Buyer	4.Agent	7.Family
2.Seller	5.Pub Rec	8.Other
3.Lender	6.MLS	9.

Assessment Record

Year	Land	Buildings	Exempt	Total
2009	5,000	33,300	14,400	23,900
2012	5,000	33,300	14,080	24,220
2013	6,600	33,300	14,080	25,820
2015	6,600	33,300	14,400	25,500
2018	6,600	33,300	23,920	15,980
2019	12,300	62,500	26,000	48,800
2020	12,300	62,400	6,000	68,700
2021	12,300	62,500	0	74,800
2022	12,300	75,200	25,000	62,500

Land Data

Front Foot	Type	Effective Frontage	Effective Depth	Influence Factor	Influence Code
11.Regular Lot				%	
12.Delta Triangle				%	
13.Nabla Triangle				%	
14.Rear Land				%	
15.Class I Road				%	
				%	
				%	
Square Foot		**Square Feet**			
16.Class II Road	29	1,000		100 %	0
17.Municipal Rese				%	
18.Munic Sep Lago				%	
19.Gravel Pit				%	
20.Industrial Bas				%	
				%	
				%	
Fract. Acre		**Acreage/Sites**			
21.Developed Pave	21	0.35		100 %	0
22.Undev Paved (F				%	
23.Developed Grav				%	
Acres				%	
24.Undev Gravel (				%	
25.Comm Base Pave				%	
26.Comm Base Grav				%	
27.Backlot				%	
28.Rear Land				%	
29.Pavement				%	

Total Acreage 0.35

Influence Codes

1.Unimproved
2.Excess Frtg
3.Topography
4.Size/Shape
5.Access
6.Restriction
7.Open Space
8.View/Environ
9.Fract Share
Acres
30.Utility R O W
31.Tillable
32.Pasture
33.Orchard
34.Softwood F&O
35.Mixed Wood F&O
36.Hardwood F&O
37.Softwood TG
38.Mixed Wood TG
39.Hardwood TG
40.Wasteland
41.Open Space
42.Mobile Home Si
43.Condo Site
44.Lot Improvemen
45.Subdivision Lo
46.Heavy Ind Sit

Washburn

Map Lot 010-021 | Account 898 | Location 135 HINES STREET | Card 1 Of 1 | 12/09/2022

Building Style	**2 Ranch**		
1.Conv.	5.Garrison	9.Gambrel	
2.Ranch	6.Salt Box	10.Other	
3.R Ranch	7.Contemp	11.Split	
4.Cape	8.Log	12.	
Dwelling Units	**1**		
Other Units	**0**		
Stories	**1 One Story**		
1.1	4.1.5	7.	
2.2	5.1.75	8.	
3.3	6.2.5	9.	
Exterior Walls	**2 Vinyl/Aluminum**		
1.Wood	5.Stucco	9.T-111	
2.Vin/Al	6.Brick	10.Other	
3.Compos.	7.Stone	11.	
4.Asbestos	8.Concrete	12.	
Roof Surface	**3 Sheet Metal**		
1.Asphalt	4.Composit	7.	
2.Slate	5.Wood	8.	
3.Metal	6.Other	9.	
SF Masonry Trim	**0**		
OPEN-3-CUSTOM	**0**		
OPEN-4-CUSTOM	**0**		
Year Built	**1953**		
Year Remodeled	**0**		
Foundation	**1 Concrete**		
1.Concrete	4.Wood	7.	
2.C Block	5.Slab	8.	
3.Br/Stone	6.Piers	9.	
Basement	**4 Full Basement**		
1.1/4 Bmt	4.Full Bmt	7.	
2.1/2 Bmt	5.None	8.	
3.3/4 Bmt	6.	9.None	
Bsmt Gar # Cars	**0**		
Wet Basement	**1 Dry Basement**		
1.Dry	4.	7.	
2.Damp	5.	8.	
3.Wet	6.	9.	

SF Bsmt Living	**176**		
Fin Bsmt Grade	**2 110**		
OPEN 5 OPTIONAL	**0**		
Heat Type	**100%**	**1 Hot Water BB**	
1.HWBB	5.FWA	9.No Heat	
2.HWCI	6.GravWA	10.	
3.H Pump	7.Electric	11.	
4.Steam	8.Fl/Wall	12.	
Cool Type	**0%**	**9 None**	
1.Refrig	4.W&C Air	7.	
2.Evapor	5.	8.	
3.H Pump	6.	9.None	
Kitchen Style	**2 Typical**		
1.Modern	4.Obsolete	7.	
2.Typical	5.	8.	
3.Old Type	6.	9.None	
Bath(s) Style	**2 Typical Bath(s)**		
1.Modern	4.Obsolete	7.	
2.Typical	5.	8.	
3.Old Type	6.	9.None	
# Rooms	**4**		
# Bedrooms	**2**		
# Full Baths	**2**		
# Half Baths	**0**		
# Addn Fixtures	**0**		
# Fireplaces	**0**		

TRIO Software
A Division of Harris Computer Systems

Layout	**1 Typical**		
1.Typical	4.	7.	
2.Inadeq	5.	8.	
3.Poor	6.	9.	
Attic	**9 None**		
1.1/4 Fin	4.Full Fin	7.	
2.1/2 Fin	5.Fl/Stair	8.	
3.3/4 Fin	6.	9.None	
Insulation	**1 Full**		
1.Full	4.Minimal	7.	
2.Heavy	5.Partial	8.	
3.Capped	6.	9.None	
Unfinished %	**0%**		
Grade & Factor	**3 Average 100%**		
1.E Grade	4.B Grade	7.	
2.D Grade	5.A Grade	8.SC Grade	
3.C Grade	6.AA Grade	9.Same	
SQFT (Footprint)	**690**		
Condition	**5 Above Average**		
1.Poor	4.Avg	7.V G	
2.Fair	5.Avg+	8.Exc	
3.Avg-	6.Good	9.Same	
Phys. % Good	**0%**		
Funct. % Good	**100%**		
Functional Code	**9 None**		
1.Incomp	4.Delap	7.No Power	
2.O-Built	5.Bsmt	8.LongTerm	
3.Damage	6.Common	9.None	
Econ. % Good	**100%**		
Economic Code	**None**		
0.None	3.No Power	7.	
1.Location	4.Generate	8.	
2.Encroach	9.None	9.	
Entrance Code	**1 Interior Inspect**		
1.Interior	4.Vacant	7.	
2.Refusal	5.Estimate	8.	
3.Informed	6.Reviewed	9.	
Information Code	**1 Owner**		
1.Owner	4.Agent	7.	
2.Relative	5.Estimate	8.	
3.Tenant	6.Other	9.	

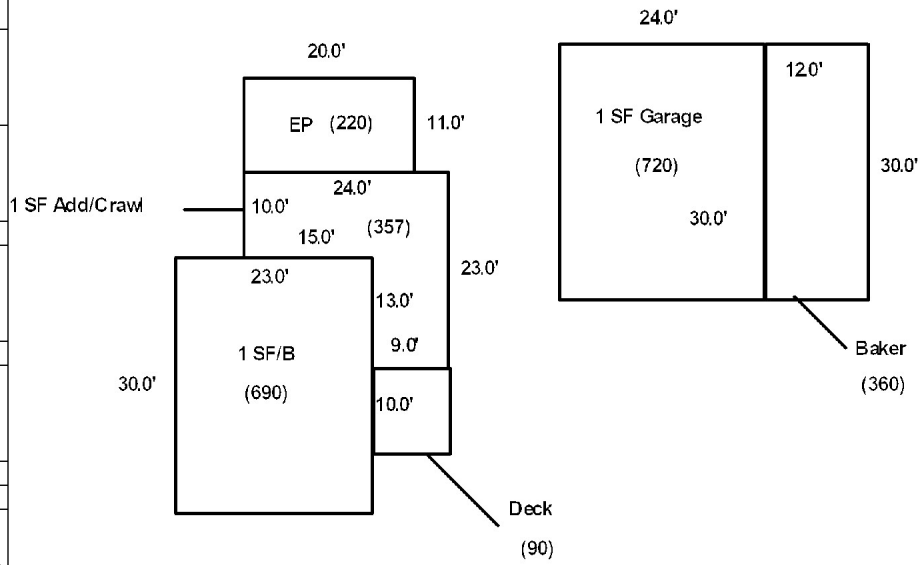

Date Inspected 10/01/2018

Additions, Outbuildings & Improvements

Type	Year	Units	Grade	Cond	Phys.	Funct.	Sound Value
1 One Story Frame	1980	357	2 110	4	0 %	100 %	
22 Encl Frame Porch	1985	220	2 110	4	0 %	100 %	
23 Frame Garage	1995	720	3 95	4	0 %	100 %	
68 Wood Deck	2021	90	3 100	4	0 %	100 %	
58 Baker	2021	360	3 100	4	0 %	100 %	
					%	%	
					%	%	
					%	%	
					%	%	
					%	%	

1.One Story Fram
2.Two Story Fram
3.Three Story Fr
4.1 & 1/2 Story
5.1 & 3/4 Story
6.2 & 1/2 Story
21.Open Frame Por
22.Encl Frame Por
23.Frame Garage
24.Frame Shed
25.Frame Bay Wind
26.1SFr Overhang
27.Unfin Basement
28.Unfinished Att
29.Finished Attic

Map Lot 010-022 Account 1079 Location 131 Hines Street Card 1 Of 1 12/09/2022

PARADIS, LELAND ROGER & TERRY LYNN
PARADIS, TYLER
PO Box 394
Washburn ME 04786

B6224P247

Previous Owner
Baker, Neil D Jr
PO BOX 323

WASHBURN ME 04786
Sale Date: 9/20/2021

Inspection Witnessed By:

X Date

No./Date	Description	Date Insp.

Notes:
Check 2023 for well septic or new building

* Abated for 2022. Demo was completed before 4/1/2022 - JB
*2-15-2019 -25% on dwelling due to delap.

Washburn

Property Data

Neighborhood **1 Neighborhood One**

Tree Growth Year **0**

1ST MORTGAGE **0**

2ND MORTGAGE **0**

Zone/Land Use **1 Residential**

Secondary Zone

Topography **2 Rolling**

1.Level	4.Below St	7.LevelBog
2.Rolling	5.Low	8.
3.Above St	6.Swampy	9.

Utilities **2 Public Water** **3 Public Sewer**

1.Public	4.Dr Well	7.Cesspool
2.Water	5.Dug Well	8.
3.Sewer	6.Septic	9.None

Street **1 Paved**

1.Paved	4.Proposed	7.
2.Semi Imp	5.R/O/W	8.
3.Gravel	6.	9.None

TG PLAN YEAR **0**

Tif District # **0**

Sale Data

Sale Date **9/20/2021**

Price **5,000**

Sale Type **2 Land & Buildings**

1.Land	4.Mobile	7.C/I L&B
2.L & B	5.Other	8.
3.Building	6.C/I Land	9.

Financing **1 Conventional**

1.Convent	4.Seller	7.
2.FHA/VA	5.Private	8.
3.Assumed	6.Cash	9.Unknown

Validity **8 Other Non Valid**

1.Valid	4.Split	7.Renovate
2.Related	5.Partial	8.Other
3.Distress	6.Exempt	9.

Verified **1 Buyer**

1.Buyer	4.Agent	7.Family
2.Seller	5.Pub Rec	8.Other
3.Lender	6.MLS	9.

Assessment Record

Year	Land	Buildings	Exempt	Total
2009	4,800	25,000	9,000	20,800
2012	4,800	25,000	8,800	21,000
2013	6,200	25,000	8,800	22,400
2015	6,200	25,000	9,000	22,200
2018	6,200	25,000	18,400	12,800
2019	9,200	27,900	0	37,100
2020	9,200	27,900	0	37,100
2021	9,200	27,900	0	37,100
2022	9,200	29,300	0	38,500

Land Data

Front Foot	Type	Effective Frontage	Effective Depth	Influence Factor	Influence Code
11.Regular Lot				%	
12.Delta Triangle				%	
13.Nabla Triangle				%	
14.Rear Land				%	
15.Class I Road				%	
				%	
				%	
Square Foot		**Square Feet**			
16.Class II Road				%	
17.Municipal Rese				%	
18.Munic Sep Lago				%	
19.Gravel Pit				%	
20.Industrial Bas				%	
				%	
				%	
Fract. Acre		**Acreage/Sites**			
21.Developed Pave	21		0.31	100 %	0
22.Undev Paved (F				%	
23.Developed Grav				%	
Acres				%	
24.Undev Gravel (				%	
25.Comm Base Pave				%	
26.Comm Base Grav				%	
27.Backlot				%	
28.Rear Land				%	
29.Pavement				%	

Total Acreage 0.31

Influence Codes

1.Unimproved
2.Excess Frtg
3.Topography
4.Size/Shape
5.Access
6.Restriction
7.Open Space
8.View/Environ
9.Fract Share
Acres
30.Utility R O W
31.Tillable
32.Pasture
33.Orchard
34.Softwood F&O
35.Mixed Wood F&O
36.Hardwood F&O
37.Softwood TG
38.Mixed Wood TG
39.Hardwood TG
40.Wasteland
41.Open Space
42.Mobile Home Si
43.Condo Site
44.Lot Improvemen
45.Subdivision Lo
46.Heavy Ind Sit

Washburn

Map Lot 010-022 | Account 1079 | Location 131 Hines Street | Card 1 Of 1 | 12/09/2022

Building Style		
1.Conv.	5.Garrison	9.Gambrel
2.Ranch	6.Salt Box	10.Other
3.R Ranch	7.Contemp	11.Split
4.Cape	8.Log	12.

Dwelling Units

Other Units

Stories		
1.1	4.1.5	7.
2.2	5.1.75	8.
3.3	6.2.5	9.

Exterior Walls		
1.Wood	5.Stucco	9.T-111
2.Vin/Al	6.Brick	10.Other
3.Compos.	7.Stone	11.
4.Asbestos	8.Concrete	12.

Roof Surface		
1.Asphalt	4.Composit	7.
2.Slate	5.Wood	8.
3.Metal	6.Other	9.

SF Masonry Trim

OPEN-3-CUSTOM

OPEN-4-CUSTOM

Year Built

Year Remodeled

Foundation		
1.Concrete	4.Wood	7.
2.C Block	5.Slab	8.
3.Br/Stone	6.Piers	9.

Basement		
1.1/4 Bmt	4.Full Bmt	7.
2.1/2 Bmt	5.None	8.
3.3/4 Bmt	6.	9.None

Bsmt Gar # Cars

Wet Basement		
1.Dry	4.	7.
2.Damp	5.	8.
3.Wet	6.	9.

SF Bsmt Living

Fin Bsmt Grade

OPEN 5 OPTIONAL

Heat Type **100%**		
1.HWBB	5.FWA	9.No Heat
2.HWCI	6.GravWA	10.
3.H Pump	7.Electric	11.
4.Steam	8.Fl/Wall	12.

Cool Type **0%**		
1.Refrig	4.W&C Air	7.
2.Evapor	5.	8.
3.H Pump	6.	9.None

Kitchen Style		
1.Modern	4.Obsolete	7.
2.Typical	5.	8.
3.Old Type	6.	9.None

Bath(s) Style		
1.Modern	4.Obsolete	7.
2.Typical	5.	8.
3.Old Type	6.	9.None

Rooms

Bedrooms

Full Baths

Half Baths

Addn Fixtures

Fireplaces

TRIO Software
A Division of Harris Computer Systems

Layout		
1.Typical	4.	7.
2.Inadeq	5.	8.
3.Poor	6.	9.

Attic		
1.1/4 Fin	4.Full Fin	7.
2.1/2 Fin	5.Fl/Stair	8.
3.3/4 Fin	6.	9.None

Insulation		
1.Full	4.Minimal	7.
2.Heavy	5.Partial	8.
3.Capped	6.	9.None

Unfinished %

Grade & Factor		
1.E Grade	4.B Grade	7.
2.D Grade	5.A Grade	8.SC Grade
3.C Grade	6.AA Grade	9.Same

SQFT (Footprint)

Condition		
1.Poor	4.Avg	7.V G
2.Fair	5.Avg+	8.Exc
3.Avg-	6.Good	9.Same

Phys. % Good

Funct. % Good

Functional Code		
1.Incomp	4.Delap	7.No Power
2.O-Built	5.Bsmt	8.LongTerm
3.Damage	6.Common	9.None

Econ. % Good

Economic Code		
0.None	3.No Power	7.
1.Location	4.Generate	8.
2.Encroach	9.None	9.

Entrance Code **3 Information Only**		
1.Interior	4.Vacant	7.
2.Refusal	5.Estimate	8.
3.Informed	6.Reviewed	9.

Information Code **1 Owner**		
1.Owner	4.Agent	7.
2.Relative	5.Estimate	8.
3.Tenant	6.Other	9.

Date Inspected 10/01/2018

Additions, Outbuildings & Improvements

Type	Year	Units	Grade	Cond	Phys.	Funct.	Sound Value
					%	%	
					%	%	
					%	%	
					%	%	
					%	%	
					%	%	
					%	%	
					%	%	
					%	%	
					%	%	

1.One Story Fram
2.Two Story Fram
3.Three Story Fr
4.1 & 1/2 Story
5.1 & 3/4 Story
6.2 & 1/2 Story
21.Open Frame Por
22.Encl Frame Por
23.Frame Garage
24.Frame Shed
25.Frame Bay Wind
26.1SFr Overhang
27.Unfin Basement
28.Unfinished Att
29.Finished Attic

Map Lot 010-022A Account 219 Location HINES STREET Card 1 Of 1 12/09/2022

CLAYTON, ROBERT D
CLAYTON, BRENDA J. & CLAYTON, DWIGHT
130 HINES ST
WASHBURN ME 04786

B5935P297

Property Data

Neighborhood **1 Neighborhood One**

Tree Growth Year **0**

1ST MORTGAGE **0**

2ND MORTGAGE **0**

Zone/Land Use **1 Residential**

Secondary Zone

Topography **1 Level**

1.Level	4.Below St	7.LevelBog
2.Rolling	5.Low	8.
3.Above St	6.Swampy	9.

Utilities

1.Public	4.Dr Well	7.Cesspool
2.Water	5.Dug Well	8.
3.Sewer	6.Septic	9.None

Street **1 Paved**

1.Paved	4.Proposed	7.
2.Semi Imp	5.R/O/W	8.
3.Gravel	6.	9.None

TG PLAN YEAR **0**

Tif District # **0**

Sale Data

Sale Date **9/01/2019**

Price

Sale Type **2 Land & Buildings**

1.Land	4.Mobile	7.C/I L&B
2.L & B	5.Other	8.
3.Building	6.C/I Land	9.

Financing

1.Convent	4.Seller	7.
2.FHA/VA	5.Private	8.
3.Assumed	6.Cash	9.Unknown

Validity **2 Related Parties**

1.Valid	4.Split	7.Renovate
2.Related	5.Partial	8.Other
3.Distress	6.Exempt	9.

Verified **5 Public Record**

1.Buyer	4.Agent	7.Family
2.Seller	5.Pub Rec	8.Other
3.Lender	6.MLS	9.

Assessment Record

Year	Land	Buildings	Exempt	Total
2009	2,400	500	0	2,900
2012	2,400	500	0	2,900
2013	3,100	500	0	3,600
2015	3,100	500	0	3,600
2018	3,100	500	0	3,600
2019	3,500	1,200	0	4,700
2020	3,500	1,200	0	4,700
2021	3,500	1,200	0	4,700
2022	3,500	1,200	0	4,700

Land Data

Front Foot	Type	Effective Frontage	Effective Depth	Influence Factor	Influence Code
11.Regular Lot				%	
12.Delta Triangle				%	
13.Nabla Triangle				%	
14.Rear Land				%	
15.Class I Road				%	
				%	
				%	
Square Foot		**Square Feet**			
16.Class II Road				%	
17.Municipal Rese				%	
18.Munic Sep Lago				%	
19.Gravel Pit				%	
20.Industrial Bas				%	
				%	
				%	
Fract. Acre		**Acreage/Sites**			
21.Developed Pave	22	0.15		100 %	0
22.Undev Paved (F				%	
23.Developed Grav				%	
Acres				%	
24.Undev Gravel (				%	
25.Comm Base Pave				%	
26.Comm Base Grav				%	
27.Backlot				%	
28.Rear Land				%	
29.Pavement				%	

Total Acreage 0.15

Influence Codes

1.Unimproved
2.Excess Frtg
3.Topography
4.Size/Shape
5.Access
6.Restriction
7.Open Space
8.View/Environ
9.Fract Share
Acres
30.Utility R O W
31.Tillable
32.Pasture
33.Orchard
34.Softwood F&O
35.Mixed Wood F&O
36.Hardwood F&O
37.Softwood TG
38.Mixed Wood TG
39.Hardwood TG
40.Wasteland
41.Open Space
42.Mobile Home Si
43.Condo Site
44.Lot Improvemen
45.Subdivision Lo
46.Heavy Ind Sit

Inspection Witnessed By:

X Date

No./Date	Description	Date Insp.

Notes:

Washburn

Washburn

Map Lot 010-022A | Account 219 | Location HINES STREET | Card 1 Of 1 | 12/09/2022

Building Style **0**		
1.Conv.	5.Garrison	9.Gambrel
2.Ranch	6.Salt Box	10.Other
3.R Ranch	7.Contemp	11.Split
4.Cape	8.Log	12.
Dwelling Units **0**		
Other Units **0**		
Stories **0**		
1.1	4.1.5	7.
2.2	5.1.75	8.
3.3	6.2.5	9.
Exterior Walls **0**		
1.Wood	5.Stucco	9.T-111
2.Vin/Al	6.Brick	10.Other
3.Compos.	7.Stone	11.
4.Asbestos	8.Concrete	12.
Roof Surface **0**		
1.Asphalt	4.Composit	7.
2.Slate	5.Wood	8.
3.Metal	6.Other	9.
SF Masonry Trim **0**		
OPEN-3-CUSTOM **0**		
OPEN-4-CUSTOM **0**		
Year Built **0**		
Year Remodeled **0**		
Foundation **0**		
1.Concrete	4.Wood	7.
2.C Block	5.Slab	8.
3.Br/Stone	6.Piers	9.
Basement **0**		
1.1/4 Bmt	4.Full Bmt	7.
2.1/2 Bmt	5.None	8.
3.3/4 Bmt	6.	9.None
Bsmt Gar # Cars **0**		
Wet Basement **0**		
1.Dry	4.	7.
2.Damp	5.	8.
3.Wet	6.	9.

SF Bsmt Living **0**		
Fin Bsmt Grade **0 0**		
OPEN 5 OPTIONAL **0**		
Heat Type **100%** **0**		
1.HWBB	5.FWA	9.No Heat
2.HWCI	6.GravWA	10.
3.H Pump	7.Electric	11.
4.Steam	8.Fl/Wall	12.
Cool Type **0%** **9 None**		
1.Refrig	4.W&C Air	7.
2.Evapor	5.	8.
3.H Pump	6.	9.None
Kitchen Style **0**		
1.Modern	4.Obsolete	7.
2.Typical	5.	8.
3.Old Type	6.	9.None
Bath(s) Style **0**		
1.Modern	4.Obsolete	7.
2.Typical	5.	8.
3.Old Type	6.	9.None
# Rooms **0**		
# Bedrooms **0**		
# Full Baths **0**		
# Half Baths **0**		
# Addn Fixtures **0**		
# Fireplaces **0**		

TRIO Software
A Division of Harris Computer Systems

Layout **0**		
1.Typical	4.	7.
2.Inadeq	5.	8.
3.Poor	6.	9.
Attic **0**		
1.1/4 Fin	4.Full Fin	7.
2.1/2 Fin	5.Fl/Stair	8.
3.3/4 Fin	6.	9.None
Insulation **0**		
1.Full	4.Minimal	7.
2.Heavy	5.Partial	8.
3.Capped	6.	9.None
Unfinished % **0%**		
Grade & Factor **0 0%**		
1.E Grade	4.B Grade	7.
2.D Grade	5.A Grade	8.SC Grade
3.C Grade	6.AA Grade	9.Same
SQFT (Footprint) **0**		
Condition **0**		
1.Poor	4.Avg	7.V G
2.Fair	5.Avg+	8.Exc
3.Avg-	6.Good	9.Same
Phys. % Good **0%**		
Funct. % Good **100%**		
Functional Code **9 None**		
1.Incomp	4.Delap	7.No Power
2.O-Built	5.Bsmt	8.LongTerm
3.Damage	6.Common	9.None
Econ. % Good **100%**		
Economic Code **None**		
0.None	3.No Power	7.
1.Location	4.Generate	8.
2.Encroach	9.None	9.
Entrance Code **5 Estimated**		
1.Interior	4.Vacant	7.
2.Refusal	5.Estimate	8.
3.Informed	6.Reviewed	9.
Information Code **5 Estimate**		
1.Owner	4.Agent	7.
2.Relative	5.Estimate	8.
3.Tenant	6.Other	9.

Date Inspected 10/01/2018

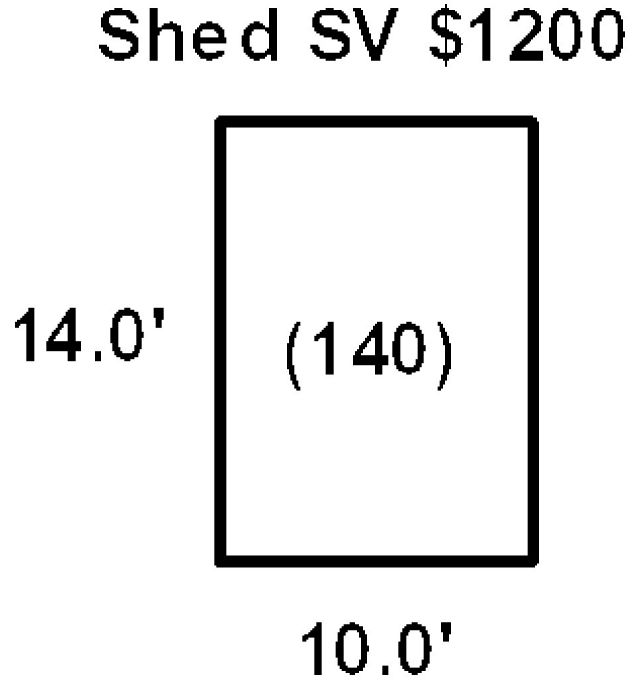

Additions, Outbuildings & Improvements

Type	Year	Units	Grade	Cond	Phys.	Funct.	Sound Value
24 Frame Shed	0				%	%	1,200
					%	%	
					%	%	
					%	%	
					%	%	
					%	%	
					%	%	
					%	%	
					%	%	
					%	%	

1.One Story Fram
2.Two Story Fram
3.Three Story Fr
4.1 & 1/2 Story
5.1 & 3/4 Story
6.2 & 1/2 Story
21.Open Frame Por
22.Encl Frame Por
23.Frame Garage
24.Frame Shed
25.Frame Bay Wind
26.1SFr Overhang
27.Unfin Basement
28.Unfinished Att
29.Finished Attic

Map Lot 010-023 | Account 641 | Location 127 HINES STREET | Card 1 Of 1 | 12/09/2022

CRAW, DAVID J JR
CRAW, SELENA W
127 HINES STREET
WASHBURN ME 04786

B4907P53

Previous Owner
Gillan, Michael A.
Gillan, Cheryl L.
192 Morris Road
Woodland ME 04736
Sale Date: 1/21/2011

Previous Owner
Sharp, Norma Jean
Sharp, Kirk Allen
34 Stove Pipe Corner Road
Castle Hill ME 04757
Sale Date: 1/04/2010

Previous Owner
Sharp, Garth C. Sr.
50 Kinglet Drive #3

Shrewsbury MA 01545 4315
Sale Date: 1/16/2009

Inspection Witnessed By:

X Date

No./Date	Description	Date Insp.

Notes:
*2-15-2019 Lister was refused entry at time of reval because homeowner was sick. -20% for attached sheds.

Washburn

Property Data

Neighborhood **1 Neighborhood One**

Tree Growth Year **0**

1ST MORTGAGE **0**

2ND MORTGAGE **0**

Zone/Land Use **1 Residential**

Secondary Zone

Topography **1 Level**

1.Level	4.Below St	7.LevelBog
2.Rolling	5.Low	8.
3.Above St	6.Swampy	9.

Utilities **2 Public Water** **3 Public Sewer**

1.Public	4.Dr Well	7.Cesspool
2.Water	5.Dug Well	8.
3.Sewer	6.Septic	9.None

Street **1 Paved**

1.Paved	4.Proposed	7.
2.Semi Imp	5.R/O/W	8.
3.Gravel	6.	9.None

TG PLAN YEAR **0**

Tif District # **0**

Sale Data

Sale Date **1/24/2011**

Price **6,000**

Sale Type **2 Land & Buildings**

1.Land	4.Mobile	7.C/I L&B
2.L & B	5.Other	8.
3.Building	6.C/I Land	9.

Financing

1.Convent	4.Seller	7.
2.FHA/VA	5.Private	8.
3.Assumed	6.Cash	9.Unknown

Validity **1 Arms Length Sale**

1.Valid	4.Split	7.Renovate
2.Related	5.Partial	8.Other
3.Distress	6.Exempt	9.

Verified **5 Public Record**

1.Buyer	4.Agent	7.Family
2.Seller	5.Pub Rec	8.Other
3.Lender	6.MLS	9.

Assessment Record

Year	Land	Buildings	Exempt	Total
2009	3,300	16,700	0	20,000
2012	3,300	3,000	6,300	0
2013	15,200	20,300	8,800	26,700
2015	15,200	20,300	9,000	26,500
2018	4,300	35,600	18,400	21,500
2019	9,400	69,900	20,000	59,300
2020	9,400	69,100	25,000	53,500
2021	9,400	69,900	25,000	54,300
2022	9,400	73,400	25,000	57,800

Land Data

Front Foot	Type	Effective Frontage	Effective Depth	Influence Factor	Influence Code
11.Regular Lot				%	
12.Delta Triangle				%	
13.Nabla Triangle				%	
14.Rear Land				%	
15.Class I Road				%	
				%	
				%	
Square Foot		**Square Feet**			
16.Class II Road	29	1,000		75 %	0
17.Municipal Rese				%	
18.Munic Sep Lago				%	
19.Gravel Pit				%	
20.Industrial Bas				%	
				%	
				%	
Fract. Acre		**Acreage/Sites**			
21.Developed Pave	21	0.21		100 %	0
22.Undev Paved (F				%	
23.Developed Grav				%	
Acres				%	
24.Undev Gravel (				%	
25.Comm Base Pave				%	
26.Comm Base Grav				%	
27.Backlot				%	
28.Rear Land				%	
29.Pavement				%	

Total Acreage 0.21

Influence Codes

1.Unimproved
2.Excess Frtg
3.Topography
4.Size/Shape
5.Access
6.Restriction
7.Open Space
8.View/Environ
9.Fract Share
Acres
30.Utility R O W
31.Tillable
32.Pasture
33.Orchard
34.Softwood F&O
35.Mixed Wood F&O
36.Hardwood F&O
37.Softwood TG
38.Mixed Wood TG
39.Hardwood TG
40.Wasteland
41.Open Space
42.Mobile Home Si
43.Condo Site
44.Lot Improvemen
45.Subdivision Lo
46.Heavy Ind Sit

Washburn

Map Lot 010-023 | Account 641 | Location 127 HINES STREET | Card 1 Of 1 | 12/09/2022

Building Style	**1 Conventional**		
1.Conv.	5.Garrison	9.Gambrel	
2.Ranch	6.Salt Box	10.Other	
3.R Ranch	7.Contemp	11.Split	
4.Cape	8.Log	12.	
Dwelling Units	**1**		
Other Units	**0**		
Stories	**4 One & 1/2 Story**		
1.1	4.1.5	7.	
2.2	5.1.75	8.	
3.3	6.2.5	9.	
Exterior Walls	**2 Vinyl/Aluminum**		
1.Wood	5.Stucco	9.T-111	
2.Vin/Al	6.Brick	10.Other	
3.Compos.	7.Stone	11.	
4.Asbestos	8.Concrete	12.	
Roof Surface	**3 Sheet Metal**		
1.Asphalt	4.Composit	7.	
2.Slate	5.Wood	8.	
3.Metal	6.Other	9.	
SF Masonry Trim	**0**		
OPEN-3-CUSTOM	**0**		
OPEN-4-CUSTOM	**0**		
Year Built	**1970**		
Year Remodeled	**0**		
Foundation	**5 Concrete Slab**		
1.Concrete	4.Wood	7.	
2.C Block	5.Slab	8.	
3.Br/Stone	6.Piers	9.	
Basement	**9 No Basement**		
1.1/4 Bmt	4.Full Bmt	7.	
2.1/2 Bmt	5.None	8.	
3.3/4 Bmt	6.	9.None	
Bsmt Gar # Cars	**0**		
Wet Basement	**9 No Basement**		
1.Dry	4.	7.	
2.Damp	5.	8.	
3.Wet	6.	9.	

SF Bsmt Living	**0**		
Fin Bsmt Grade	**0 0**		
OPEN 5 OPTIONAL	**0**		
Heat Type	**100%**	**1 Hot Water BB**	
1.HWBB	5.FWA	9.No Heat	
2.HWCI	6.GravWA	10.	
3.H Pump	7.Electric	11.	
4.Steam	8.Fl/Wall	12.	
Cool Type	**0%**	**9 None**	
1.Refrig	4.W&C Air	7.	
2.Evapor	5.	8.	
3.H Pump	6.	9.None	
Kitchen Style	**2 Typical**		
1.Modern	4.Obsolete	7.	
2.Typical	5.	8.	
3.Old Type	6.	9.None	
Bath(s) Style	**2 Typical Bath(s)**		
1.Modern	4.Obsolete	7.	
2.Typical	5.	8.	
3.Old Type	6.	9.None	
# Rooms	**5**		
# Bedrooms	**2**		
# Full Baths	**1**		
# Half Baths	**0**		
# Addn Fixtures	**0**		
# Fireplaces	**0**		

TRIO Software
A Division of Harris Computer Systems

Layout	**1 Typical**		
1.Typical	4.	7.	
2.Inadeq	5.	8.	
3.Poor	6.	9.	
Attic	**9 None**		
1.1/4 Fin	4.Full Fin	7.	
2.1/2 Fin	5.Fl/Stair	8.	
3.3/4 Fin	6.	9.None	
Insulation	**1 Full**		
1.Full	4.Minimal	7.	
2.Heavy	5.Partial	8.	
3.Capped	6.	9.None	
Unfinished %	**0%**		
Grade & Factor	**3 Average 95%**		
1.E Grade	4.B Grade	7.	
2.D Grade	5.A Grade	8.SC Grade	
3.C Grade	6.AA Grade	9.Same	
SQFT (Footprint)	**360**		
Condition	**5 Above Average**		
1.Poor	4.Avg	7.V G	
2.Fair	5.Avg+	8.Exc	
3.Avg-	6.Good	9.Same	
Phys. % Good	**0%**		
Funct. % Good	**100%**		
Functional Code	**9 None**		
1.Incomp	4.Delap	7.No Power	
2.O-Built	5.Bsmt	8.LongTerm	
3.Damage	6.Common	9.None	
Econ. % Good	**100%**		
Economic Code	**None**		
0.None	3.No Power	7.	
1.Location	4.Generate	8.	
2.Encroach	9.None	9.	
Entrance Code	**2 Refused Entry**		
1.Interior	4.Vacant	7.	
2.Refusal	5.Estimate	8.	
3.Informed	6.Reviewed	9.	
Information Code	**1 Owner**		
1.Owner	4.Agent	7.	
2.Relative	5.Estimate	8.	
3.Tenant	6.Other	9.	

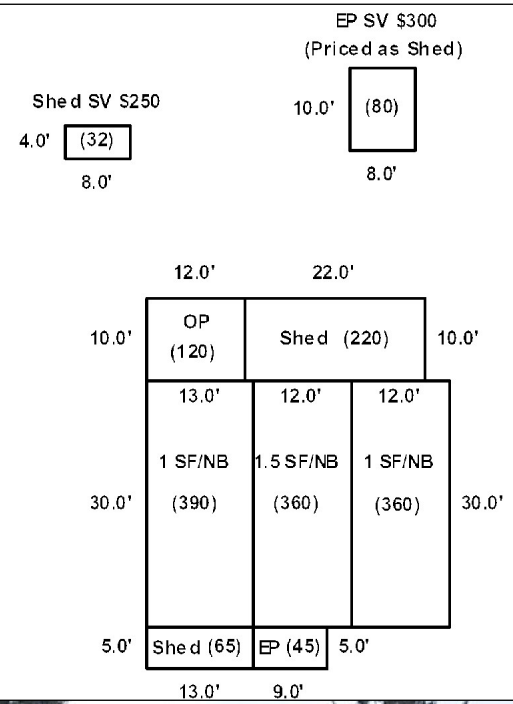

Date Inspected 10/02/2018

Additions, Outbuildings & Improvements

Type	Year	Units	Grade	Cond	Phys.	Funct.	Sound Value
1 One Story Frame	1970	360	3 90	5	0 %	100 %	
1 One Story Frame	1970	390	3 90	5	0 %	100 %	
22 Encl Frame Porch	2000	45	3 95	4	0 %	100 %	
24 Frame Shed	2000	65	2 110	4	0 %	80 %	
21 Open Frame	1990	120	2 110	4	0 %	100 %	
24 Frame Shed	1990	220	2 100	3	0 %	80 %	
24 Frame Shed	0				%	%	250
24 Frame Shed	0				%	%	300
					%	%	
					%	%	

1.One Story Fram
2.Two Story Fram
3.Three Story Fr
4.1 & 1/2 Story
5.1 & 3/4 Story
6.2 & 1/2 Story
21.Open Frame Por
22.Encl Frame Por
23.Frame Garage
24.Frame Shed
25.Frame Bay Wind
26.1SFr Overhang
27.Unfin Basement
28.Unfinished Att
29.Finished Attic

Map Lot 010-024 | Account 640 | Location 125 HINES STREET | Card 1 Of 1 | 12/09/2022

DUROST, CHARLES
DUROST, MORA
PO BOX 348
WASHBURN ME 04786

B4979P80

Previous Owner
Ranger, Wayne Jr.
Ranger, Mary
P.O. Box 458
Washburn ME 04786
Sale Date: 9/19/2011

Previous Owner
Abbott, Alfred
25 Durost Drive

Washburn ME 04786
Sale Date: 9/09/2011

Inspection Witnessed By:

X Date

No./Date	Description	Date Insp.

Notes:

Washburn

Property Data

Neighborhood **1 Neighborhood One**

Tree Growth Year **0**

1ST MORTGAGE **0**

2ND MORTGAGE **0**

Zone/Land Use **1 Residential**

Secondary Zone

Topography **1 Level**

1.Level	4.Below St	7.LevelBog
2.Rolling	5.Low	8.
3.Above St	6.Swampy	9.

Utilities

1.Public	4.Dr Well	7.Cesspool
2.Water	5.Dug Well	8.
3.Sewer	6.Septic	9.None

Street **1 Paved**

1.Paved	4.Proposed	7.
2.Semi Imp	5.R/O/W	8.
3.Gravel	6.	9.None

TG PLAN YEAR **0**

Tif District # **0**

Sale Data

Sale Date **9/09/2011**

Price

Sale Type **2 Land & Buildings**

1.Land	4.Mobile	7.C/I L&B
2.L & B	5.Other	8.
3.Building	6.C/I Land	9.

Financing

1.Convent	4.Seller	7.
2.FHA/VA	5.Private	8.
3.Assumed	6.Cash	9.Unknown

Validity **1 Arms Length Sale**

1.Valid	4.Split	7.Renovate
2.Related	5.Partial	8.Other
3.Distress	6.Exempt	9.

Verified **5 Public Record**

1.Buyer	4.Agent	7.Family
2.Seller	5.Pub Rec	8.Other
3.Lender	6.MLS	9.

Assessment Record

Year	Land	Buildings	Exempt	Total
2009	2,500	11,700	0	14,200
2012	2,500	0	0	2,500
2013	3,300	0	0	3,300
2015	3,300	0	0	3,300
2018	3,300	0	0	3,300
2019	3,600	0	0	3,600
2020	3,600	0	0	3,600
2021	3,600	0	0	3,600
2022	3,600	0	0	3,600

Land Data

Front Foot	Type	Effective Frontage	Effective Depth	Influence Factor	Influence Code
11.Regular Lot				%	
12.Delta Triangle				%	
13.Nabla Triangle				%	
14.Rear Land				%	
15.Class I Road				%	
				%	
				%	
Square Foot		**Square Feet**			
16.Class II Road				%	
17.Municipal Rese				%	
18.Munic Sep Lago				%	
19.Gravel Pit				%	
20.Industrial Bas				%	
				%	
				%	
Fract. Acre		**Acreage/Sites**			
21.Developed Pave	22	0.16		100 %	0
22.Undev Paved (F				%	
23.Developed Grav				%	
Acres				%	
24.Undev Gravel (				%	
25.Comm Base Pave				%	
26.Comm Base Grav				%	
27.Backlot				%	
28.Rear Land				%	
29.Pavement				%	

Total Acreage 0.16

Influence Codes

1.Unimproved
2.Excess Frtg
3.Topography
4.Size/Shape
5.Access
6.Restriction
7.Open Space
8.View/Environ
9.Fract Share
Acres
30.Utility R O W
31.Tillable
32.Pasture
33.Orchard
34.Softwood F&O
35.Mixed Wood F&O
36.Hardwood F&O
37.Softwood TG
38.Mixed Wood TG
39.Hardwood TG
40.Wasteland
41.Open Space
42.Mobile Home Si
43.Condo Site
44.Lot Improvemen
45.Subdivision Lo
46.Heavy Ind Sit

Washburn

Map Lot 010-024 | Account 640 | Location 125 HINES STREET | Card 1 Of 1 | 12/09/2022

Building Style **0**		
1.Conv.	5.Garrison	9.Gambrel
2.Ranch	6.Salt Box	10.Other
3.R Ranch	7.Contemp	11.Split
4.Cape	8.Log	12.
Dwelling Units **0**		
Other Units **0**		
Stories **0**		
1.1	4.1.5	7.
2.2	5.1.75	8.
3.3	6.2.5	9.
Exterior Walls **0**		
1.Wood	5.Stucco	9.T-111
2.Vin/Al	6.Brick	10.Other
3.Compos.	7.Stone	11.
4.Asbestos	8.Concrete	12.
Roof Surface **0**		
1.Asphalt	4.Composit	7.
2.Slate	5.Wood	8.
3.Metal	6.Other	9.
SF Masonry Trim **0**		
OPEN-3-CUSTOM **0**		
OPEN-4-CUSTOM **0**		
Year Built **0**		
Year Remodeled **0**		
Foundation **0**		
1.Concrete	4.Wood	7.
2.C Block	5.Slab	8.
3.Br/Stone	6.Piers	9.
Basement **0**		
1.1/4 Bmt	4.Full Bmt	7.
2.1/2 Bmt	5.None	8.
3.3/4 Bmt	6.	9.None
Bsmt Gar # Cars **0**		
Wet Basement **0**		
1.Dry	4.	7.
2.Damp	5.	8.
3.Wet	6.	9.

SF Bsmt Living **0**		
Fin Bsmt Grade **0 0**		
OPEN 5 OPTIONAL **0**		
Heat Type **100%** **0**		
1.HWBB	5.FWA	9.No Heat
2.HWCI	6.GravWA	10.
3.H Pump	7.Electric	11.
4.Steam	8.Fl/Wall	12.
Cool Type **0%** **9 None**		
1.Refrig	4.W&C Air	7.
2.Evapor	5.	8.
3.H Pump	6.	9.None
Kitchen Style **0**		
1.Modern	4.Obsolete	7.
2.Typical	5.	8.
3.Old Type	6.	9.None
Bath(s) Style **0**		
1.Modern	4.Obsolete	7.
2.Typical	5.	8.
3.Old Type	6.	9.None
# Rooms **0**		
# Bedrooms **0**		
# Full Baths **0**		
# Half Baths **0**		
# Addn Fixtures **0**		
# Fireplaces **0**		

TRIO Software
A Division of Harris Computer Systems

Layout **0**		
1.Typical	4.	7.
2.Inadeq	5.	8.
3.Poor	6.	9.
Attic **0**		
1.1/4 Fin	4.Full Fin	7.
2.1/2 Fin	5.Fl/Stair	8.
3.3/4 Fin	6.	9.None
Insulation **0**		
1.Full	4.Minimal	7.
2.Heavy	5.Partial	8.
3.Capped	6.	9.None
Unfinished % **0%**		
Grade & Factor **0 0%**		
1.E Grade	4.B Grade	7.
2.D Grade	5.A Grade	8.SC Grade
3.C Grade	6.AA Grade	9.Same
SQFT (Footprint) **0**		
Condition **0**		
1.Poor	4.Avg	7.V G
2.Fair	5.Avg+	8.Exc
3.Avg-	6.Good	9.Same
Phys. % Good **0%**		
Funct. % Good **100%**		
Functional Code **9 None**		
1.Incomp	4.Delap	7.No Power
2.O-Built	5.Bsmt	8.LongTerm
3.Damage	6.Common	9.None
Econ. % Good **100%**		
Economic Code **None**		
0.None	3.No Power	7.
1.Location	4.Generate	8.
2.Encroach	9.None	9.
Entrance Code **0**		
1.Interior	4.Vacant	7.
2.Refusal	5.Estimate	8.
3.Informed	6.Reviewed	9.
Information Code **0**		
1.Owner	4.Agent	7.
2.Relative	5.Estimate	8.
3.Tenant	6.Other	9.

Date Inspected

Additions, Outbuildings & Improvements

Type	Year	Units	Grade	Cond	Phys.	Funct.	Sound Value
					%	%	
					%	%	
					%	%	
					%	%	
					%	%	
					%	%	
					%	%	
					%	%	
					%	%	
					%	%	

1.One Story Fram
2.Two Story Fram
3.Three Story Fr
4.1 & 1/2 Story
5.1 & 3/4 Story
6.2 & 1/2 Story
21.Open Frame Por
22.Encl Frame Por
23.Frame Garage
24.Frame Shed
25.Frame Bay Wind
26.1SFr Overhang
27.Unfin Basement
28.Unfinished Att
29.Finished Attic

Map Lot 010-025 Account 407 Location 121 HINES STREET Card 1 Of 1 12/09/2022

DUROST, CHARLES W
DUROST, MORA W
PO BOX 348
WASHBURN ME 04786

B1123P545

Property Data

Neighborhood **1 Neighborhood One**

Tree Growth Year **0**

1ST MORTGAGE **0**

2ND MORTGAGE **0**

Zone/Land Use **1 Residential**

Secondary Zone

Topography **1 Level**

1.Level	4.Below St	7.LevelBog
2.Rolling	5.Low	8.
3.Above St	6.Swampy	9.

Utilities **2 Public Water** **3 Public Sewer**

1.Public	4.Dr Well	7.Cesspool
2.Water	5.Dug Well	8.
3.Sewer	6.Septic	9.None

Street **1 Paved**

1.Paved	4.Proposed	7.
2.Semi Imp	5.R/O/W	8.
3.Gravel	6.	9.None

TG PLAN YEAR **0**

Tif District # **0**

Sale Data

Sale Date **4/28/1973**

Price

Sale Type **2 Land & Buildings**

1.Land	4.Mobile	7.C/I L&B
2.L & B	5.Other	8.
3.Building	6.C/I Land	9.

Financing

1.Convent	4.Seller	7.
2.FHA/VA	5.Private	8.
3.Assumed	6.Cash	9.Unknown

Validity **1 Arms Length Sale**

1.Valid	4.Split	7.Renovate
2.Related	5.Partial	8.Other
3.Distress	6.Exempt	9.

Verified **5 Public Record**

1.Buyer	4.Agent	7.Family
2.Seller	5.Pub Rec	8.Other
3.Lender	6.MLS	9.

Assessment Record

Year	Land	Buildings	Exempt	Total
2009	6,200	68,900	14,400	60,700
2012	6,200	68,900	14,080	61,020
2013	8,100	68,900	14,080	62,920
2015	8,100	68,900	14,400	62,600
2018	8,100	68,900	23,920	53,080
2019	16,200	70,800	26,000	61,000
2020	16,200	70,800	31,000	56,000
2021	16,200	70,800	31,000	56,000
2022	16,200	74,300	31,000	59,500

Land Data

Front Foot	Type	Effective Frontage	Effective Depth	Influence Factor	Influence Code
11.Regular Lot				%	
12.Delta Triangle				%	
13.Nabla Triangle				%	
14.Rear Land				%	
15.Class I Road				%	
				%	
				%	
Square Foot		**Square Feet**			
16.Class II Road	29	1,800		100 %	0
17.Municipal Rese				%	
18.Munic Sep Lago				%	
19.Gravel Pit				%	
20.Industrial Bas				%	
				%	
				%	
Fract. Acre		**Acreage/Sites**			
21.Developed Pave	21	0.50		100 %	0
22.Undev Paved (F				%	
23.Developed Grav				%	
Acres				%	
24.Undev Gravel (				%	
25.Comm Base Pave				%	
26.Comm Base Grav				%	
27.Backlot				%	
28.Rear Land				%	
29.Pavement				%	

Total Acreage 0.50

Influence Codes

1.Unimproved
2.Excess Frtg
3.Topography
4.Size/Shape
5.Access
6.Restriction
7.Open Space
8.View/Environ
9.Fract Share

Acres

30.Utility R O W
31.Tillable
32.Pasture
33.Orchard
34.Softwood F&O
35.Mixed Wood F&O
36.Hardwood F&O
37.Softwood TG
38.Mixed Wood TG
39.Hardwood TG
40.Wasteland
41.Open Space
42.Mobile Home Si
43.Condo Site
44.Lot Improvemen
45.Subdivision Lo
46.Heavy Ind Sit

Inspection Witnessed By:

X Date

No./Date	Description	Date Insp.

Notes:

Washburn

Washburn

Map Lot 010-025 | Account 407 | Location 121 HINES STREET | Card 1 Of 1 | 12/09/2022

Building Style	**2 Ranch**		
1.Conv.	5.Garrison	9.Gambrel	
2.Ranch	6.Salt Box	10.Other	
3.R Ranch	7.Contemp	11.Split	
4.Cape	8.Log	12.	
Dwelling Units	**1**		
Other Units	**0**		
Stories	**1 One Story**		
1.1	4.1.5	7.	
2.2	5.1.75	8.	
3.3	6.2.5	9.	
Exterior Walls	**2 Vinyl/Aluminum**		
1.Wood	5.Stucco	9.T-111	
2.Vin/Al	6.Brick	10.Other	
3.Compos.	7.Stone	11.	
4.Asbestos	8.Concrete	12.	
Roof Surface	**1 Asphalt Shingles**		
1.Asphalt	4.Composit	7.	
2.Slate	5.Wood	8.	
3.Metal	6.Other	9.	
SF Masonry Trim	**0**		
OPEN-3-CUSTOM	**0**		
OPEN-4-CUSTOM	**0**		
Year Built	**1950**		
Year Remodeled	**0**		
Foundation	**1 Concrete**		
1.Concrete	4.Wood	7.	
2.C Block	5.Slab	8.	
3.Br/Stone	6.Piers	9.	
Basement	**4 Full Basement**		
1.1/4 Bmt	4.Full Bmt	7.	
2.1/2 Bmt	5.None	8.	
3.3/4 Bmt	6.	9.None	
Bsmt Gar # Cars	**0**		
Wet Basement	**1 Dry Basement**		
1.Dry	4.	7.	
2.Damp	5.	8.	
3.Wet	6.	9.	

SF Bsmt Living	**0**		
Fin Bsmt Grade	**0 0**		
OPEN 5 OPTIONAL	**0**		
Heat Type	**100%**	**5 Forced Warm Air**	
1.HWBB	5.FWA	9.No Heat	
2.HWCI	6.GravWA	10.	
3.H Pump	7.Electric	11.	
4.Steam	8.Fl/Wall	12.	
Cool Type	**0%**	**9 None**	
1.Refrig	4.W&C Air	7.	
2.Evapor	5.	8.	
3.H Pump	6.	9.None	
Kitchen Style	**2 Typical**		
1.Modern	4.Obsolete	7.	
2.Typical	5.	8.	
3.Old Type	6.	9.None	
Bath(s) Style	**2 Typical Bath(s)**		
1.Modern	4.Obsolete	7.	
2.Typical	5.	8.	
3.Old Type	6.	9.None	
# Rooms	**5**		
# Bedrooms	**2**		
# Full Baths	**1**		
# Half Baths	**0**		
# Addn Fixtures	**0**		
# Fireplaces	**0**		

TRIO Software
A Division of Harris Computer Systems

Layout	**1 Typical**		
1.Typical	4.	7.	
2.Inadeq	5.	8.	
3.Poor	6.	9.	
Attic	**9 None**		
1.1/4 Fin	4.Full Fin	7.	
2.1/2 Fin	5.Fl/Stair	8.	
3.3/4 Fin	6.	9.None	
Insulation	**1 Full**		
1.Full	4.Minimal	7.	
2.Heavy	5.Partial	8.	
3.Capped	6.	9.None	
Unfinished %	**0%**		
Grade & Factor	**3 Average 100%**		
1.E Grade	4.B Grade	7.	
2.D Grade	5.A Grade	8.SC Grade	
3.C Grade	6.AA Grade	9.Same	
SQFT (Footprint)	**945**		
Condition	**5 Above Average**		
1.Poor	4.Avg	7.V G	
2.Fair	5.Avg+	8.Exc	
3.Avg-	6.Good	9.Same	
Phys. % Good	**0%**		
Funct. % Good	**100%**		
Functional Code	**9 None**		
1.Incomp	4.Delap	7.No Power	
2.O-Built	5.Bsmt	8.LongTerm	
3.Damage	6.Common	9.None	
Econ. % Good	**100%**		
Economic Code	**None**		
0.None	3.No Power	7.	
1.Location	4.Generate	8.	
2.Encroach	9.None	9.	
Entrance Code	**1 Interior Inspect**		
1.Interior	4.Vacant	7.	
2.Refusal	5.Estimate	8.	
3.Informed	6.Reviewed	9.	
Information Code	**1 Owner**		
1.Owner	4.Agent	7.	
2.Relative	5.Estimate	8.	
3.Tenant	6.Other	9.	

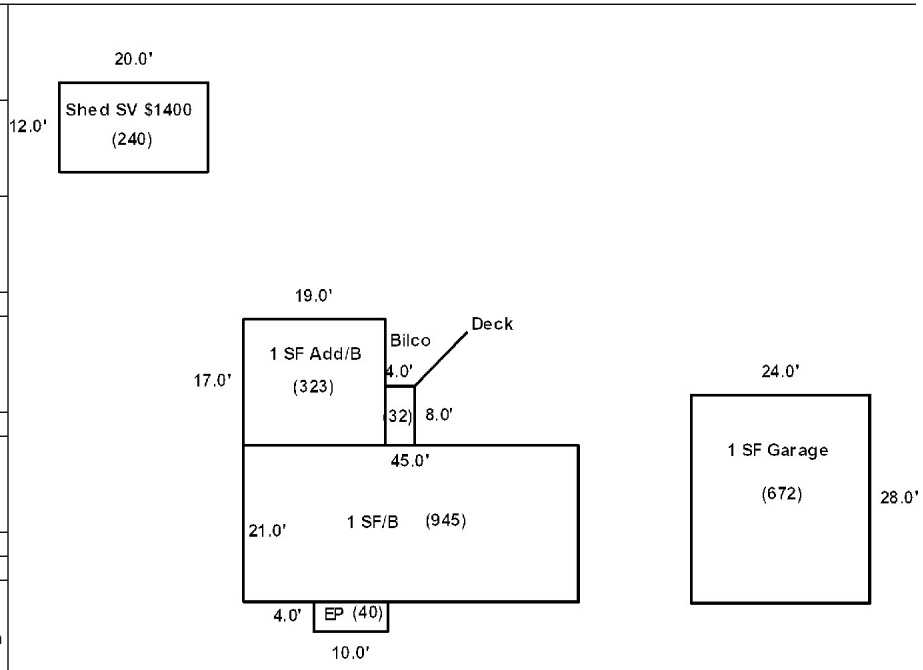

Date Inspected 10/02/2018

Additions, Outbuildings & Improvements

Type	Year	Units	Grade	Cond	Phys.	Funct.	Sound Value
22 Encl Frame Porch	1950	40	3 95	5	0 %	100 %	
68 Wood Deck	1990	32	3 95	3	0 %	100 %	
20 1 Story/Bsmt	1960	323	9 100	9	0 %	100 %	
23 Frame Garage	1955	672	3 100	5	0 %	100 %	
24 Frame Shed	0				%	%	1,400
					%	%	
					%	%	
					%	%	
					%	%	
					%	%	

1.One Story Fram
2.Two Story Fram
3.Three Story Fr
4.1 & 1/2 Story
5.1 & 3/4 Story
6.2 & 1/2 Story
21.Open Frame Por
22.Encl Frame Por
23.Frame Garage
24.Frame Shed
25.Frame Bay Wind
26.1SFr Overhang
27.Unfin Basement
28.Unfinished Att
29.Finished Attic

Map Lot 010-026 Account 130 Location 115 HINES STREET Card 1 Of 1 12/09/2022

CARVELL, STEPHEN
CARVELL, CHRISTOPHER
115 HINES STREET
WASHBURN ME 04786

B4765P206 B5489P67

Previous Owner
Federal National Mortgage Association
3900 Wisconsin Ave. N.W.

Washington DC 20016
Sale Date: 10/29/2009

Previous Owner
McClung, Daniel L.
c/o PHH Mortgage Company/Foreclosure
400 Leadenhall Road
Mount Laurel NJ 08054
Sale Date: 5/26/2009

Inspection Witnessed By:

X Date

No./Date	Description	Date Insp.

Notes:

Property Data

Neighborhood **1 Neighborhood One**

Tree Growth Year **0**

1ST MORTGAGE **0**

2ND MORTGAGE **0**

Zone/Land Use **1 Residential**

Secondary Zone

Topography **2 Rolling**

1.Level	4.Below St	7.LevelBog
2.Rolling	5.Low	8.
3.Above St	6.Swampy	9.

Utilities **2 Public Water** **3 Public Sewer**

1.Public	4.Dr Well	7.Cesspool
2.Water	5.Dug Well	8.
3.Sewer	6.Septic	9.None

Street **1 Paved**

1.Paved	4.Proposed	7.
2.Semi Imp	5.R/O/W	8.
3.Gravel	6.	9.None

TG PLAN YEAR **0**

Tif District # **0**

Sale Data

Sale Date **10/29/2009**

Price **38,000**

Sale Type **2 Land & Buildings**

1.Land	4.Mobile	7.C/I L&B
2.L & B	5.Other	8.
3.Building	6.C/I Land	9.

Financing **1 Conventional**

1.Convent	4.Seller	7.
2.FHA/VA	5.Private	8.
3.Assumed	6.Cash	9.Unknown

Validity **3 Distressed Sale**

1.Valid	4.Split	7.Renovate
2.Related	5.Partial	8.Other
3.Distress	6.Exempt	9.

Verified **5 Public Record**

1.Buyer	4.Agent	7.Family
2.Seller	5.Pub Rec	8.Other
3.Lender	6.MLS	9.

Assessment Record

Year	Land	Buildings	Exempt	Total
2009	1,900	46,100	0	48,000
2012	1,900	46,100	8,800	39,200
2013	2,500	46,100	8,800	39,800
2015	2,500	46,100	9,000	39,600
2018	2,500	46,100	18,400	30,200
2019	5,700	47,300	20,000	33,000
2020	5,700	46,700	25,000	27,400
2021	5,700	47,300	25,000	28,000
2022	5,700	49,600	25,000	30,300

Land Data

Front Foot	Type	Effective Frontage	Effective Depth	Influence Factor	Influence Code
11.Regular Lot				%	
12.Delta Triangle				%	
13.Nabla Triangle				%	
14.Rear Land				%	
15.Class I Road				%	
				%	
				%	
Square Foot		**Square Feet**			
16.Class II Road				%	
17.Municipal Rese				%	
18.Munic Sep Lago				%	
19.Gravel Pit				%	
20.Industrial Bas				%	
				%	
				%	
Fract. Acre		**Acreage/Sites**			
21.Developed Pave	21	0.12		100 %	0
22.Undev Paved (F				%	
23.Developed Grav				%	
Acres				%	
24.Undev Gravel (				%	
25.Comm Base Pave				%	
26.Comm Base Grav				%	
27.Backlot				%	
28.Rear Land				%	
29.Pavement				%	

Total Acreage 0.12

Influence Codes

1.Unimproved
2.Excess Frtg
3.Topography
4.Size/Shape
5.Access
6.Restriction
7.Open Space
8.View/Environ
9.Fract Share
Acres
30.Utility R O W
31.Tillable
32.Pasture
33.Orchard
34.Softwood F&O
35.Mixed Wood F&O
36.Hardwood F&O
37.Softwood TG
38.Mixed Wood TG
39.Hardwood TG
40.Wasteland
41.Open Space
42.Mobile Home Si
43.Condo Site
44.Lot Improvemen
45.Subdivision Lo
46.Heavy Ind Sit

Washburn

Washburn

Map Lot 010-026 | Account 130 | Location 115 HINES STREET | Card 1 Of 1 | 12/09/2022

Building Style	**2 Ranch**		
1.Conv.	5.Garrison	9.Gambrel	
2.Ranch	6.Salt Box	10.Other	
3.R Ranch	7.Contemp	11.Split	
4.Cape	8.Log	12.	
Dwelling Units	**1**		
Other Units	**0**		
Stories	**1 One Story**		
1.1	4.1.5	7.	
2.2	5.1.75	8.	
3.3	6.2.5	9.	
Exterior Walls	**9 T-111**		
1.Wood	5.Stucco	9.T-111	
2.Vin/Al	6.Brick	10.Other	
3.Compos.	7.Stone	11.	
4.Asbestos	8.Concrete	12.	
Roof Surface	**1 Asphalt Shingles**		
1.Asphalt	4.Composit	7.	
2.Slate	5.Wood	8.	
3.Metal	6.Other	9.	
SF Masonry Trim	**0**		
OPEN-3-CUSTOM	**0**		
OPEN-4-CUSTOM	**0**		
Year Built	**1984**		
Year Remodeled	**0**		
Foundation	**1 Concrete**		
1.Concrete	4.Wood	7.	
2.C Block	5.Slab	8.	
3.Br/Stone	6.Piers	9.	
Basement	**4 Full Basement**		
1.1/4 Bmt	4.Full Bmt	7.	
2.1/2 Bmt	5.None	8.	
3.3/4 Bmt	6.	9.None	
Bsmt Gar # Cars	**0**		
Wet Basement	**1 Dry Basement**		
1.Dry	4.	7.	
2.Damp	5.	8.	
3.Wet	6.	9.	

SF Bsmt Living	**0**		
Fin Bsmt Grade	**0 0**		
OPEN 5 OPTIONAL	**0**		
Heat Type	**100%**	**5 Forced Warm Air**	
1.HWBB	5.FWA	9.No Heat	
2.HWCI	6.GravWA	10.	
3.H Pump	7.Electric	11.	
4.Steam	8.Fl/Wall	12.	
Cool Type	**0%**	**9 None**	
1.Refrig	4.W&C Air	7.	
2.Evapor	5.	8.	
3.H Pump	6.	9.None	
Kitchen Style	**2 Typical**		
1.Modern	4.Obsolete	7.	
2.Typical	5.	8.	
3.Old Type	6.	9.None	
Bath(s) Style	**2 Typical Bath(s)**		
1.Modern	4.Obsolete	7.	
2.Typical	5.	8.	
3.Old Type	6.	9.None	
# Rooms	**4**		
# Bedrooms	**2**		
# Full Baths	**1**		
# Half Baths	**0**		
# Addn Fixtures	**0**		
# Fireplaces	**0**		

TRIO Software
A Division of Harris Computer Systems

Layout	**1 Typical**		
1.Typical	4.	7.	
2.Inadeq	5.	8.	
3.Poor	6.	9.	
Attic	**9 None**		
1.1/4 Fin	4.Full Fin	7.	
2.1/2 Fin	5.Fl/Stair	8.	
3.3/4 Fin	6.	9.None	
Insulation	**1 Full**		
1.Full	4.Minimal	7.	
2.Heavy	5.Partial	8.	
3.Capped	6.	9.None	
Unfinished %	**0%**		
Grade & Factor	**3 Average 100%**		
1.E Grade	4.B Grade	7.	
2.D Grade	5.A Grade	8.SC Grade	
3.C Grade	6.AA Grade	9.Same	
SQFT (Footprint)	**841**		
Condition	**4 Average**		
1.Poor	4.Avg	7.V G	
2.Fair	5.Avg+	8.Exc	
3.Avg-	6.Good	9.Same	
Phys. % Good	**0%**		
Funct. % Good	**100%**		
Functional Code	**9 None**		
1.Incomp	4.Delap	7.No Power	
2.O-Built	5.Bsmt	8.LongTerm	
3.Damage	6.Common	9.None	
Econ. % Good	**100%**		
Economic Code	**None**		
0.None	3.No Power	7.	
1.Location	4.Generate	8.	
2.Encroach	9.None	9.	
Entrance Code	**3 Information Only**		
1.Interior	4.Vacant	7.	
2.Refusal	5.Estimate	8.	
3.Informed	6.Reviewed	9.	
Information Code	**1 Owner**		
1.Owner	4.Agent	7.	
2.Relative	5.Estimate	8.	
3.Tenant	6.Other	9.	

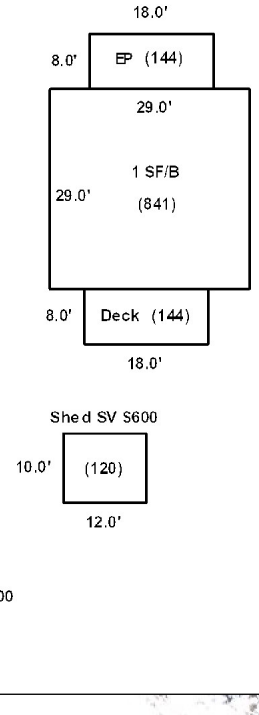

Date Inspected 10/02/2018

Additions, Outbuildings & Improvements

Type	Year	Units	Grade	Cond	Phys.	Funct.	Sound Value
22 Encl Frame Porch	1984	144	3 90	3	0 %	100 %	
68 Wood Deck	1990	144	3 100	3	0 %	100 %	
24 Frame Shed	0				%	%	600
24 Frame Shed	0				%	%	600
					%	%	
					%	%	
					%	%	
					%	%	
					%	%	
					%	%	

1.One Story Fram
2.Two Story Fram
3.Three Story Fr
4.1 & 1/2 Story
5.1 & 3/4 Story
6.2 & 1/2 Story
21.Open Frame Por
22.Encl Frame Por
23.Frame Garage
24.Frame Shed
25.Frame Bay Wind
26.1SFr Overhang
27.Unfin Basement
28.Unfinished Att
29.Finished Attic

Map Lot 010-027 | Account 839 | Location 113 HINES STREET | Card 1 Of 1 | 12/09/2022

TILLEY, ALTON R JR
TILLEY, CAROL A
139 HINES STREET
WASHBURN ME 04786

B5095P61

Previous Owner
WASHBURN, TOWN OF
33 STORY STREET

WASHBURN ME 04786
Sale Date: 3/16/2021

Previous Owner
BOYCE, ANGELA M.
33 STORY STREET

WASHBURN ME 04786
Sale Date: 11/15/2018

Previous Owner
Clark, James
Clark, Sherri
P.O. Box 165
Washburn ME 04786
Sale Date: 2/13/2012

Inspection Witnessed By:

X Date

No./Date	Description	Date Insp.

Notes:
*5-9-2019 Dwelling assessed at 50% functional at time of reval. -25% on EP for delap, -20% for attached shed.

Washburn

Property Data

Neighborhood	**1 Neighborhood One**		
Tree Growth Year	**0**		
1ST MORTGAGE		**0**	
2ND MORTGAGE		**0**	
Zone/Land Use	**1 Residential**		
Secondary Zone			
Topography	**1 Level**		
1.Level	4.Below St	7.LevelBog	
2.Rolling	5.Low	8.	
3.Above St	6.Swampy	9.	
Utilities	**2 Public Water**	**3 Public Sewer**	
1.Public	4.Dr Well	7.Cesspool	
2.Water	5.Dug Well	8.	
3.Sewer	6.Septic	9.None	
Street	**1 Paved**		
1.Paved	4.Proposed	7.	
2.Semi Imp	5.R/O/W	8.	
3.Gravel	6.	9.None	
TG PLAN YEAR		**0**	
Tif District #		**0**	

Sale Data

Sale Date		**3/16/2021**	
Price		**6,500**	
Sale Type	**1 Land Only**		
1.Land	4.Mobile	7.C/I L&B	
2.L & B	5.Other	8.	
3.Building	6.C/I Land	9.	
Financing	**9 Unknown**		
1.Convent	4.Seller	7.	
2.FHA/VA	5.Private	8.	
3.Assumed	6.Cash	9.Unknown	
Validity	**8 Other Non Valid**		
1.Valid	4.Split	7.Renovate	
2.Related	5.Partial	8.Other	
3.Distress	6.Exempt	9.	
Verified	**5 Public Record**		
1.Buyer	4.Agent	7.Family	
2.Seller	5.Pub Rec	8.Other	
3.Lender	6.MLS	9.	

Assessment Record

Year	Land	Buildings	Exempt	Total
2009	3,900	14,700	0	18,600
2012	3,900	14,700	0	18,600
2013	5,000	14,700	8,800	10,900
2015	5,000	14,700	9,000	10,700
2018	5,000	8,200	0	13,200
2019	8,300	0	8,300	0
2020	8,300	0	8,300	0
2021	8,300	0	0	8,300
2022	8,300	0	0	8,300

Land Data

Front Foot	Type	Effective Frontage	Effective Depth	Influence Factor	Influence Code
11.Regular Lot				%	
12.Delta Triangle				%	
13.Nabla Triangle				%	
14.Rear Land				%	
15.Class I Road				%	
				%	
				%	
Square Foot		**Square Feet**			
16.Class II Road				%	
17.Municipal Rese				%	
18.Munic Sep Lago				%	
19.Gravel Pit				%	
20.Industrial Bas				%	
				%	
				%	
Fract. Acre		**Acreage/Sites**			
21.Developed Pave	21	0.25		100 %	0
22.Undev Paved (F				%	
23.Developed Grav				%	
Acres				%	
24.Undev Gravel (				%	
25.Comm Base Pave				%	
26.Comm Base Grav				%	
27.Backlot				%	
28.Rear Land				%	
29.Pavement				%	

Total Acreage 0.25

Influence Codes

1.Unimproved
2.Excess Frtg
3.Topography
4.Size/Shape
5.Access
6.Restriction
7.Open Space
8.View/Environ
9.Fract Share
Acres
30.Utility R O W
31.Tillable
32.Pasture
33.Orchard
34.Softwood F&O
35.Mixed Wood F&O
36.Hardwood F&O
37.Softwood TG
38.Mixed Wood TG
39.Hardwood TG
40.Wasteland
41.Open Space
42.Mobile Home Si
43.Condo Site
44.Lot Improvemen
45.Subdivision Lo
46.Heavy Ind Sit

Washburn

Map Lot 010-027 | Account 839 | Location 113 HINES STREET | Card 1 Of 1 | 12/09/2022

Building Style	**4 Cape Cod**		
1.Conv.	5.Garrison	9.Gambrel	
2.Ranch	6.Salt Box	10.Other	
3.R Ranch	7.Contemp	11.Split	
4.Cape	8.Log	12.	
Dwelling Units	**1**		
Other Units	**0**		
Stories	**4 One & 1/2 Story**		
1.1	4.1.5	7.	
2.2	5.1.75	8.	
3.3	6.2.5	9.	
Exterior Walls	**1 Wood Siding**		
1.Wood	5.Stucco	9.T-111	
2.Vin/Al	6.Brick	10.Other	
3.Compos.	7.Stone	11.	
4.Asbestos	8.Concrete	12.	
Roof Surface	**6 Other**		
1.Asphalt	4.Composit	7.	
2.Slate	5.Wood	8.	
3.Metal	6.Other	9.	
SF Masonry Trim	**0**		
OPEN-3-CUSTOM	**0**		
OPEN-4-CUSTOM	**0**		
Year Built	**1960**		
Year Remodeled	**0**		
Foundation	**1 Concrete**		
1.Concrete	4.Wood	7.	
2.C Block	5.Slab	8.	
3.Br/Stone	6.Piers	9.	
Basement	**4 Full Basement**		
1.1/4 Bmt	4.Full Bmt	7.	
2.1/2 Bmt	5.None	8.	
3.3/4 Bmt	6.	9.None	
Bsmt Gar # Cars	**0**		
Wet Basement	**2 Damp Basement**		
1.Dry	4.	7.	
2.Damp	5.	8.	
3.Wet	6.	9.	

SF Bsmt Living	**0**		
Fin Bsmt Grade	**0 0**		
OPEN 5 OPTIONAL	**0**		
Heat Type	**100%**	**5 Forced Warm Air**	
1.HWBB	5.FWA	9.No Heat	
2.HWCI	6.GravWA	10.	
3.H Pump	7.Electric	11.	
4.Steam	8.Fl/Wall	12.	
Cool Type	**0%**	**9 None**	
1.Refrig	4.W&C Air	7.	
2.Evapor	5.	8.	
3.H Pump	6.	9.None	
Kitchen Style	**2 Typical**		
1.Modern	4.Obsolete	7.	
2.Typical	5.	8.	
3.Old Type	6.	9.None	
Bath(s) Style	**2 Typical Bath(s)**		
1.Modern	4.Obsolete	7.	
2.Typical	5.	8.	
3.Old Type	6.	9.None	
# Rooms	**6**		
# Bedrooms	**3**		
# Full Baths	**1**		
# Half Baths	**0**		
# Addn Fixtures	**0**		
# Fireplaces	**0**		

TRIO Software
A Division of Harris Computer Systems

Layout	**1 Typical**		
1.Typical	4.	7.	
2.Inadeq	5.	8.	
3.Poor	6.	9.	
Attic	**9 None**		
1.1/4 Fin	4.Full Fin	7.	
2.1/2 Fin	5.Fl/Stair	8.	
3.3/4 Fin	6.	9.None	
Insulation	**4 Minimal**		
1.Full	4.Minimal	7.	
2.Heavy	5.Partial	8.	
3.Capped	6.	9.None	
Unfinished %	**0%**		
Grade & Factor	**2 Fair 100%**		
1.E Grade	4.B Grade	7.	
2.D Grade	5.A Grade	8.SC Grade	
3.C Grade	6.AA Grade	9.Same	
SQFT (Footprint)	**432**		
Condition	**1 Poor**		
1.Poor	4.Avg	7.V G	
2.Fair	5.Avg+	8.Exc	
3.Avg-	6.Good	9.Same	
Phys. % Good	**0%**		
Funct. % Good	**0%**		
Functional Code	**4 Delapidation**		
1.Incomp	4.Delap	7.No Power	
2.O-Built	5.Bsmt	8.LongTerm	
3.Damage	6.Common	9.None	
Econ. % Good	**100%**		
Economic Code	**None**		
0.None	3.No Power	7.	
1.Location	4.Generate	8.	
2.Encroach	9.None	9.	
Entrance Code	**5 Estimated**		
1.Interior	4.Vacant	7.	
2.Refusal	5.Estimate	8.	
3.Informed	6.Reviewed	9.	
Information Code	**5 Estimate**		
1.Owner	4.Agent	7.	
2.Relative	5.Estimate	8.	
3.Tenant	6.Other	9.	

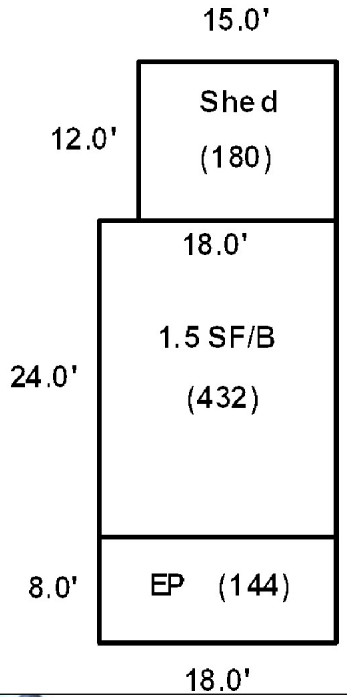

Date Inspected 10/02/2018

Additions, Outbuildings & Improvements

Type	Year	Units	Grade	Cond	Phys.	Funct.	Sound Value
22 Encl Frame Porch	1960	144	2 100	2	0 %	0 %	
24 Frame Shed	1960	180	2 100	2	0 %	0 %	
					%	%	
					%	%	
					%	%	
					%	%	
					%	%	
					%	%	
					%	%	
					%	%	

1.One Story Fram
2.Two Story Fram
3.Three Story Fr
4.1 & 1/2 Story
5.1 & 3/4 Story
6.2 & 1/2 Story
21.Open Frame Por
22.Encl Frame Por
23.Frame Garage
24.Frame Shed
25.Frame Bay Wind
26.1SFr Overhang
27.Unfin Basement
28.Unfinished Att
29.Finished Attic

Map Lot 010-029 | Account 820 | Location 107 HINES STREET | Card 1 Of 1 | 12/09/2022

CHURCHILL, WILLIAM JR
108 HINES STREET
WASHBURN ME 04786

B5183P181

Previous Owner
Holmes, Steven
777 New Dunntown Road

Wade ME 04786
Sale Date: 5/17/2013

Previous Owner
Town of Washburn
John Little
P.O. Box 221
Washburn ME 04786
Sale Date: 2/03/2009

Inspection Witnessed By:

X Date

No./Date	Description	Date Insp.

Notes:

Washburn

Property Data

Neighborhood	**1 Neighborhood One**
Tree Growth Year	**0**
1ST MORTGAGE	**0**
2ND MORTGAGE	**0**
Zone/Land Use	**1 Residential**
Secondary Zone	
Topography	**1 Level**

1.Level	4.Below St	7.LevelBog
2.Rolling	5.Low	8.
3.Above St	6.Swampy	9.

Utilities

1.Public	4.Dr Well	7.Cesspool
2.Water	5.Dug Well	8.
3.Sewer	6.Septic	9.None

Street **1 Paved**

1.Paved	4.Proposed	7.
2.Semi Imp	5.R/O/W	8.
3.Gravel	6.	9.None

TG PLAN YEAR	**0**
Tif District #	**0**

Sale Data

Sale Date	**5/17/2013**
Price	**5,000**
Sale Type	**1 Land Only**

1.Land	4.Mobile	7.C/I L&B
2.L & B	5.Other	8.
3.Building	6.C/I Land	9.

Financing

1.Convent	4.Seller	7.
2.FHA/VA	5.Private	8.
3.Assumed	6.Cash	9.Unknown

Validity **1 Arms Length Sale**

1.Valid	4.Split	7.Renovate
2.Related	5.Partial	8.Other
3.Distress	6.Exempt	9.

Verified **5 Public Record**

1.Buyer	4.Agent	7.Family
2.Seller	5.Pub Rec	8.Other
3.Lender	6.MLS	9.

Assessment Record

Year	Land	Buildings	Exempt	Total
2009	4,300	21,100	0	25,400
2012	4,300	0	0	4,300
2013	5,600	0	0	5,600
2015	5,600	0	0	5,600
2018	5,600	0	0	5,600
2019	4,800	0	0	4,800
2020	4,800	0	0	4,800
2021	4,800	0	0	4,800
2022	4,800	0	0	4,800

Land Data

Front Foot	Type	Effective Frontage	Effective Depth	Influence Factor	Influence Code
11.Regular Lot				%	
12.Delta Triangle				%	
13.Nabla Triangle				%	
14.Rear Land				%	
15.Class I Road				%	
				%	
				%	
Square Foot		**Square Feet**			
16.Class II Road				%	
17.Municipal Rese				%	
18.Munic Sep Lago				%	
19.Gravel Pit				%	
20.Industrial Bas				%	
				%	
				%	
Fract. Acre		**Acreage/Sites**			
21.Developed Pave	22	0.28		100 %	0
22.Undev Paved (F				%	
23.Developed Grav				%	
Acres				%	
24.Undev Gravel (				%	
25.Comm Base Pave				%	
26.Comm Base Grav				%	
27.Backlot				%	
28.Rear Land				%	
29.Pavement				%	

Total Acreage 0.28

Influence Codes

1.Unimproved
2.Excess Frtg
3.Topography
4.Size/Shape
5.Access
6.Restriction
7.Open Space
8.View/Environ
9.Fract Share
Acres
30.Utility R O W
31.Tillable
32.Pasture
33.Orchard
34.Softwood F&O
35.Mixed Wood F&O
36.Hardwood F&O
37.Softwood TG
38.Mixed Wood TG
39.Hardwood TG
40.Wasteland
41.Open Space
42.Mobile Home Si
43.Condo Site
44.Lot Improvemen
45.Subdivision Lo
46.Heavy Ind Sit

Washburn

Map Lot 010-029 | Account 820 | Location 107 HINES STREET | Card 1 Of 1 | 12/09/2022

Building Style **0**		
1.Conv.	5.Garrison	9.Gambrel
2.Ranch	6.Salt Box	10.Other
3.R Ranch	7.Contemp	11.Split
4.Cape	8.Log	12.
Dwelling Units **0**		
Other Units **0**		
Stories **0**		
1.1	4.1.5	7.
2.2	5.1.75	8.
3.3	6.2.5	9.
Exterior Walls **0**		
1.Wood	5.Stucco	9.T-111
2.Vin/Al	6.Brick	10.Other
3.Compos.	7.Stone	11.
4.Asbestos	8.Concrete	12.
Roof Surface **0**		
1.Asphalt	4.Composit	7.
2.Slate	5.Wood	8.
3.Metal	6.Other	9.
SF Masonry Trim **0**		
OPEN-3-CUSTOM **0**		
OPEN-4-CUSTOM **0**		
Year Built **0**		
Year Remodeled **0**		
Foundation **0**		
1.Concrete	4.Wood	7.
2.C Block	5.Slab	8.
3.Br/Stone	6.Piers	9.
Basement **0**		
1.1/4 Bmt	4.Full Bmt	7.
2.1/2 Bmt	5.None	8.
3.3/4 Bmt	6.	9.None
Bsmt Gar # Cars **0**		
Wet Basement **0**		
1.Dry	4.	7.
2.Damp	5.	8.
3.Wet	6.	9.

SF Bsmt Living **0**		
Fin Bsmt Grade **0 0**		
OPEN 5 OPTIONAL **0**		
Heat Type **100%** **0**		
1.HWBB	5.FWA	9.No Heat
2.HWCI	6.GravWA	10.
3.H Pump	7.Electric	11.
4.Steam	8.Fl/Wall	12.
Cool Type **0%** **9 None**		
1.Refrig	4.W&C Air	7.
2.Evapor	5.	8.
3.H Pump	6.	9.None
Kitchen Style **0**		
1.Modern	4.Obsolete	7.
2.Typical	5.	8.
3.Old Type	6.	9.None
Bath(s) Style **0**		
1.Modern	4.Obsolete	7.
2.Typical	5.	8.
3.Old Type	6.	9.None
# Rooms **0**		
# Bedrooms **0**		
# Full Baths **0**		
# Half Baths **0**		
# Addn Fixtures **0**		
# Fireplaces **0**		

TRIO Software
A Division of Harris Computer Systems

Layout **0**		
1.Typical	4.	7.
2.Inadeq	5.	8.
3.Poor	6.	9.
Attic **0**		
1.1/4 Fin	4.Full Fin	7.
2.1/2 Fin	5.Fl/Stair	8.
3.3/4 Fin	6.	9.None
Insulation **0**		
1.Full	4.Minimal	7.
2.Heavy	5.Partial	8.
3.Capped	6.	9.None
Unfinished % **0%**		
Grade & Factor **0 0%**		
1.E Grade	4.B Grade	7.
2.D Grade	5.A Grade	8.SC Grade
3.C Grade	6.AA Grade	9.Same
SQFT (Footprint) **0**		
Condition **0**		
1.Poor	4.Avg	7.V G
2.Fair	5.Avg+	8.Exc
3.Avg-	6.Good	9.Same
Phys. % Good **0%**		
Funct. % Good **100%**		
Functional Code **9 None**		
1.Incomp	4.Delap	7.No Power
2.O-Built	5.Bsmt	8.LongTerm
3.Damage	6.Common	9.None
Econ. % Good **100%**		
Economic Code **None**		
0.None	3.No Power	7.
1.Location	4.Generate	8.
2.Encroach	9.None	9.
Entrance Code **0**		
1.Interior	4.Vacant	7.
2.Refusal	5.Estimate	8.
3.Informed	6.Reviewed	9.
Information Code **0**		
1.Owner	4.Agent	7.
2.Relative	5.Estimate	8.
3.Tenant	6.Other	9.

Date Inspected

Additions, Outbuildings & Improvements

Type	Year	Units	Grade	Cond	Phys.	Funct.	Sound Value
					%	%	
					%	%	
					%	%	
					%	%	
					%	%	
					%	%	
					%	%	
					%	%	
					%	%	
					%	%	

1.One Story Fram
2.Two Story Fram
3.Three Story Fr
4.1 & 1/2 Story
5.1 & 3/4 Story
6.2 & 1/2 Story
21.Open Frame Por
22.Encl Frame Por
23.Frame Garage
24.Frame Shed
25.Frame Bay Wind
26.1SFr Overhang
27.Unfin Basement
28.Unfinished Att
29.Finished Attic

Map Lot 010-030 Account 120 Location 105 HINES STREET Card 1 Of 1 12/09/2022

UNDERGUST, KATHLEEN
UNDERGUST, BRUCE R
105 HINES STREET
WASHBURN ME 04786

B4160P39 B5323P249

Property Data

Neighborhood	**1 Neighborhood One**
Tree Growth Year	**0**
1ST MORTGAGE	**0**
2ND MORTGAGE	**0**
Zone/Land Use	**1 Residential**
Secondary Zone	
Topography	**1 Level**

1.Level	4.Below St	7.LevelBog
2.Rolling	5.Low	8.
3.Above St	6.Swampy	9.

Utilities	**2 Public Water**	**3 Public Sewer**

1.Public	4.Dr Well	7.Cesspool
2.Water	5.Dug Well	8.
3.Sewer	6.Septic	9.None

Street	**1 Paved**

1.Paved	4.Proposed	7.
2.Semi Imp	5.R/O/W	8.
3.Gravel	6.	9.None

TG PLAN YEAR	**0**
Tif District #	**0**

Sale Data

Sale Date	**7/27/2005**
Price	**83,000**
Sale Type	**2 Land & Buildings**

1.Land	4.Mobile	7.C/I L&B
2.L & B	5.Other	8.
3.Building	6.C/I Land	9.

Financing	**1 Conventional**

1.Convent	4.Seller	7.
2.FHA/VA	5.Private	8.
3.Assumed	6.Cash	9.Unknown

Validity	**1 Arms Length Sale**

1.Valid	4.Split	7.Renovate
2.Related	5.Partial	8.Other
3.Distress	6.Exempt	9.

Verified	**5 Public Record**

1.Buyer	4.Agent	7.Family
2.Seller	5.Pub Rec	8.Other
3.Lender	6.MLS	9.

Assessment Record

Year	Land	Buildings	Exempt	Total
2009	4,700	61,800	14,400	52,100
2012	4,700	61,800	14,080	52,420
2013	6,100	61,800	14,080	53,820
2015	6,100	61,800	14,400	53,500
2018	6,100	61,800	23,920	43,980
2019	10,900	77,700	26,000	62,600
2020	10,900	77,200	31,000	57,100
2021	10,900	77,700	31,000	57,600
2022	10,900	81,600	31,000	61,500

Land Data

Front Foot	Type	Effective Frontage	Effective Depth	Influence Factor	Influence Code
11.Regular Lot				%	
12.Delta Triangle				%	
13.Nabla Triangle				%	
14.Rear Land				%	
15.Class I Road				%	
				%	
				%	
Square Foot		**Square Feet**			
16.Class II Road	29	1,000		75 %	0
17.Municipal Rese				%	
18.Munic Sep Lago				%	
19.Gravel Pit				%	
20.Industrial Bas				%	
				%	
				%	
Fract. Acre		**Acreage/Sites**			
21.Developed Pave	21	0.30		100 %	0
22.Undev Paved (F				%	
23.Developed Grav				%	
Acres				%	
24.Undev Gravel (				%	
25.Comm Base Pave				%	
26.Comm Base Grav				%	
27.Backlot				%	
28.Rear Land				%	
29.Pavement				%	

Total Acreage 0.30

Influence Codes

1.Unimproved
2.Excess Frtg
3.Topography
4.Size/Shape
5.Access
6.Restriction
7.Open Space
8.View/Environ
9.Fract Share

Acres

30.Utility R O W
31.Tillable
32.Pasture
33.Orchard
34.Softwood F&O
35.Mixed Wood F&O
36.Hardwood F&O
37.Softwood TG
38.Mixed Wood TG
39.Hardwood TG
40.Wasteland
41.Open Space
42.Mobile Home Si
43.Condo Site
44.Lot Improvemen
45.Subdivision Lo
46.Heavy Ind Sit

Inspection Witnessed By:

X Date

No./Date	Description	Date Insp.

Notes:

Washburn

Washburn

Map Lot 010-030 | Account 120 | Location 105 HINES STREET | Card 1 Of 1 | 12/09/2022

Building Style	**2 Ranch**		
1.Conv.	5.Garrison	9.Gambrel	
2.Ranch	6.Salt Box	10.Other	
3.R Ranch	7.Contemp	11.Split	
4.Cape	8.Log	12.	
Dwelling Units	**1**		
Other Units	**0**		
Stories	**1 One Story**		
1.1	4.1.5	7.	
2.2	5.1.75	8.	
3.3	6.2.5	9.	
Exterior Walls	**2 Vinyl/Aluminum**		
1.Wood	5.Stucco	9.T-111	
2.Vin/Al	6.Brick	10.Other	
3.Compos.	7.Stone	11.	
4.Asbestos	8.Concrete	12.	
Roof Surface	**3 Sheet Metal**		
1.Asphalt	4.Composit	7.	
2.Slate	5.Wood	8.	
3.Metal	6.Other	9.	
SF Masonry Trim	**0**		
OPEN-3-CUSTOM	**0**		
OPEN-4-CUSTOM	**0**		
Year Built	**1945**		
Year Remodeled	**0**		
Foundation	**1 Concrete**		
1.Concrete	4.Wood	7.	
2.C Block	5.Slab	8.	
3.Br/Stone	6.Piers	9.	
Basement	**4 Full Basement**		
1.1/4 Bmt	4.Full Bmt	7.	
2.1/2 Bmt	5.None	8.	
3.3/4 Bmt	6.	9.None	
Bsmt Gar # Cars	**0**		
Wet Basement	**1 Dry Basement**		
1.Dry	4.	7.	
2.Damp	5.	8.	
3.Wet	6.	9.	

SF Bsmt Living	**80**		
Fin Bsmt Grade	**3 100**		
OPEN 5 OPTIONAL	**0**		
Heat Type	**100%**	**1 Hot Water BB**	
1.HWBB	5.FWA	9.No Heat	
2.HWCI	6.GravWA	10.	
3.H Pump	7.Electric	11.	
4.Steam	8.Fl/Wall	12.	
Cool Type	**0%**	**9 None**	
1.Refrig	4.W&C Air	7.	
2.Evapor	5.	8.	
3.H Pump	6.	9.None	
Kitchen Style	**2 Typical**		
1.Modern	4.Obsolete	7.	
2.Typical	5.	8.	
3.Old Type	6.	9.None	
Bath(s) Style	**2 Typical Bath(s)**		
1.Modern	4.Obsolete	7.	
2.Typical	5.	8.	
3.Old Type	6.	9.None	
# Rooms	**7**		
# Bedrooms	**4**		
# Full Baths	**1**		
# Half Baths	**0**		
# Addn Fixtures	**0**		
# Fireplaces	**0**		

TRIO Software
A Division of Harris Computer Systems

Layout	**1 Typical**		
1.Typical	4.	7.	
2.Inadeq	5.	8.	
3.Poor	6.	9.	
Attic	**9 None**		
1.1/4 Fin	4.Full Fin	7.	
2.1/2 Fin	5.Fl/Stair	8.	
3.3/4 Fin	6.	9.None	
Insulation	**1 Full**		
1.Full	4.Minimal	7.	
2.Heavy	5.Partial	8.	
3.Capped	6.	9.None	
Unfinished %	**0%**		
Grade & Factor	**2 Fair 110%**		
1.E Grade	4.B Grade	7.	
2.D Grade	5.A Grade	8.SC Grade	
3.C Grade	6.AA Grade	9.Same	
SQFT (Footprint)	**1002**		
Condition	**6 Good**		
1.Poor	4.Avg	7.V G	
2.Fair	5.Avg+	8.Exc	
3.Avg-	6.Good	9.Same	
Phys. % Good	**0%**		
Funct. % Good	**100%**		
Functional Code	**9 None**		
1.Incomp	4.Delap	7.No Power	
2.O-Built	5.Bsmt	8.LongTerm	
3.Damage	6.Common	9.None	
Econ. % Good	**100%**		
Economic Code	**None**		
0.None	3.No Power	7.	
1.Location	4.Generate	8.	
2.Encroach	9.None	9.	
Entrance Code	**1 Interior Inspect**		
1.Interior	4.Vacant	7.	
2.Refusal	5.Estimate	8.	
3.Informed	6.Reviewed	9.	
Information Code	**1 Owner**		
1.Owner	4.Agent	7.	
2.Relative	5.Estimate	8.	
3.Tenant	6.Other	9.	

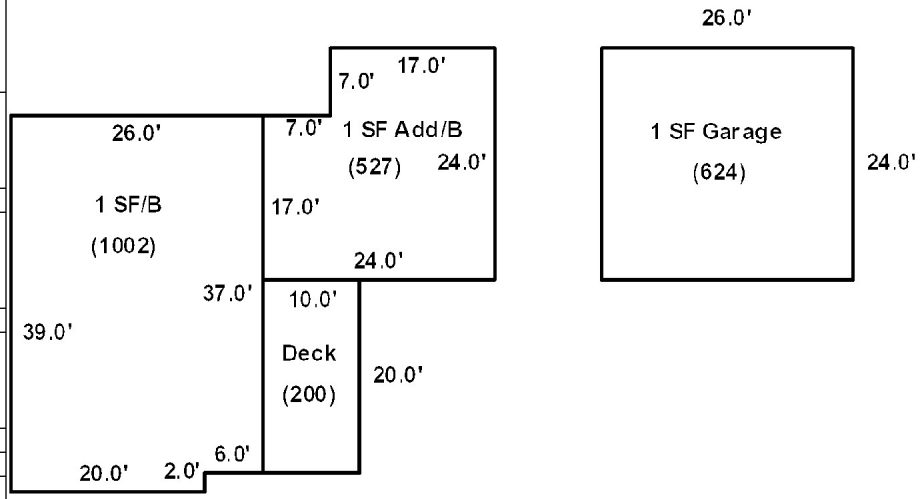

Date Inspected 10/02/2018

Additions, Outbuildings & Improvements

Type	Year	Units	Grade	Cond	Phys.	Funct.	Sound Value
68 Wood Deck	1990	200	3 100	3	0 %	100 %	
20 1 Story/Bsmt	1950	527	3 100	5	0 %	100 %	
23 Frame Garage	1965	624	3 100	5	0 %	100 %	
					%	%	
					%	%	
					%	%	
					%	%	
					%	%	
					%	%	
					%	%	

1.One Story Fram
2.Two Story Fram
3.Three Story Fr
4.1 & 1/2 Story
5.1 & 3/4 Story
6.2 & 1/2 Story
21.Open Frame Por
22.Encl Frame Por
23.Frame Garage
24.Frame Shed
25.Frame Bay Wind
26.1SFr Overhang
27.Unfin Basement
28.Unfinished Att
29.Finished Attic