Map Lot 012-051 | Account 961 | Location Main Street - Town Park | Card 1 Of 1 | 11/19/2020

Town of Washburn

1287 Main Street

Washburn ME

Property Data

Neighborhood **1 Neighborhood One**

Tree Growth Year **0**

1ST MORTGAGE **0**

2ND MORTGAGE **0**

Zone/Land Use **1 Residential**

Secondary Zone

Topography **1 Level**

1.Level	4.Below St	7.LevelBog
2.Rolling	5.Low	8.
3.Above St	6.Swampy	9.

Utilities

1.Public	4.Dr Well	7.Cesspool
2.Water	5.Dug Well	8.
3.Sewer	6.Septic	9.None

Street **1 Paved**

1.Paved	4.Proposed	7.
2.Semi Imp	5.R/O/W	8.
3.Gravel	6.	9.None

TG PLAN YEAR **0**

Tif District # **0**

Sale Data

Sale Date

Price

Sale Type

1.Land	4.Mobile	7.C/I L&B
2.L & B	5.Other	8.
3.Building	6.C/I Land	9.

Financing

1.Convent	4.Seller	7.
2.FHA/VA	5.Private	8.
3.Assumed	6.Cash	9.Unknown

Validity

1.Valid	4.Split	7.Renovate
2.Related	5.Partial	8.Other
3.Distress	6.Exempt	9.

Verified

1.Buyer	4.Agent	7.Family
2.Seller	5.Pub Rec	8.Other
3.Lender	6.MLS	9.

Assessment Record

Year	Land	Buildings	Exempt	Total
2007	11,100	2,500	13,600	0
2008	11,100	2,500	13,600	0
2009	11,100	2,500	13,600	0
2012	11,100	2,500	13,600	0
2013	14,400	2,500	16,900	0
2015	14,400	2,500	16,900	0
2018	14,400	2,500	16,900	0
2019	6,000	2,100	8,100	0
2020	6,000	2,100	8,100	0

Land Data

Front Foot	Type	Effective Frontage	Effective Depth	Influence Factor	Influence Code
11.Regular Lot				%	
12.Delta Triangle				%	
13.Nabla Triangle				%	
14.Rear Land				%	
15.Class I Road				%	
				%	
				%	
Square Foot		**Square Feet**			
16.Class II Road				%	
17.Municipal Rese				%	
18.Munic Sep Lago				%	
19.Gravel Pit				%	
20.Industrial Bas				%	
				%	
				%	
Fract. Acre		**Acreage/Sites**			
21.Developed Pave	22	0.45		100 %	0
22.Undev Paved (F				%	
23.Developed Grav				%	
Acres				%	
24.Undev Gravel (				%	
25.Comm Base Pave				%	
26.Comm Base Grav				%	
27.Backlot				%	
28.Rear Land					
29.Pavement					

Total Acreage 0.45

Influence Codes

1.Unimproved
2.Excess Frtg
3.Topography
4.Size/Shape
5.Access
6.Restriction
7.Open Space
8.View/Environ
9.Fract Share
Acres
30.Utility R O W
31.Tillable
32.Pasture
33.Orchard
34.Softwood F&O
35.Mixed Wood F&O
36.Hardwood F&O
37.Softwood TG
38.Mixed Wood TG
39.Hardwood TG
40.Wasteland
41.Open Space
42.Mobile Home Si
43.Condo Site
44.Lot Improvemen
45.Subdivision Lo
46.Heavy Ind Sit

Inspection Witnessed By:

X Date

No./Date	Description	Date Insp.

Notes:

Washburn

Washburn

Map Lot 012-051 | Account 961 | Location Main Street - Town Park | Card 1 Of 1 | 11/19/2020

Building Style **0**		
1.Conv.	5.Garrison	9.Gambrel
2.Ranch	6.Salt Box	10.Other
3.R Ranch	7.Contemp	11.Split
4.Cape	8.Log	12.
Dwelling Units **0**		
Other Units **0**		
Stories **0**		
1.1	4.1.5	7.
2.2	5.1.75	8.
3.3	6.2.5	9.
Exterior Walls **0**		
1.Wood	5.Stucco	9.T-111
2.Vin/Al	6.Brick	10.Other
3.Compos.	7.Stone	11.
4.Asbestos	8.Concrete	12.
Roof Surface **0**		
1.Asphalt	4.Composit	7.
2.Slate	5.Wood	8.
3.Metal	6.Other	9.
SF Masonry Trim **0**		
OPEN-3-CUSTOM **0**		
OPEN-4-CUSTOM **0**		
Year Built **0**		
Year Remodeled **0**		
Foundation **0**		
1.Concrete	4.Wood	7.
2.C Block	5.Slab	8.
3.Br/Stone	6.Piers	9.
Basement **0**		
1.1/4 Bmt	4.Full Bmt	7.
2.1/2 Bmt	5.None	8.
3.3/4 Bmt	6.	9.None
Bsmt Gar # Cars **0**		
Wet Basement **0**		
1.Dry	4.	7.
2.Damp	5.	8.
3.Wet	6.	9.

SF Bsmt Living **0**		
Fin Bsmt Grade **0 0**		
OPEN 5 OPTIONAL **0**		
Heat Type **100%** **0**		
1.HWBB	5.FWA	9.No Heat
2.HWCI	6.GravWA	10.
3.H Pump	7.Electric	11.
4.Steam	8.Fl/Wall	12.
Cool Type **0%** **9 None**		
1.Refrig	4.W&C Air	7.
2.Evapor	5.	8.
3.H Pump	6.	9.None
Kitchen Style **0**		
1.Modern	4.Obsolete	7.
2.Typical	5.	8.
3.Old Type	6.	9.None
Bath(s) Style **0**		
1.Modern	4.Obsolete	7.
2.Typical	5.	8.
3.Old Type	6.	9.None
# Rooms **0**		
# Bedrooms **0**		
# Full Baths **0**		
# Half Baths **0**		
# Addn Fixtures **0**		
# Fireplaces **0**		

TRIO Software
A Division of Harris Computer Systems

Layout **0**		
1.Typical	4.	7.
2.Inadeq	5.	8.
3.Poor	6.	9.
Attic **0**		
1.1/4 Fin	4.Full Fin	7.
2.1/2 Fin	5.Fl/Stair	8.
3.3/4 Fin	6.	9.None
Insulation **0**		
1.Full	4.Minimal	7.
2.Heavy	5.Partial	8.
3.Capped	6.	9.None
Unfinished % **0%**		
Grade & Factor **0 0%**		
1.E Grade	4.B Grade	7.
2.D Grade	5.A Grade	8.SC Grade
3.C Grade	6.AA Grade	9.Same
SQFT (Footprint) **0**		
Condition **0**		
1.Poor	4.Avg	7.V G
2.Fair	5.Avg+	8.Exc
3.Avg-	6.Good	9.Same
Phys. % Good **0%**		
Funct. % Good **100%**		
Functional Code **9 None**		
1.Incomp	4.Delap	7.No Power
2.O-Built	5.Bsmt	8.LongTerm
3.Damage	6.Common	9.None
Econ. % Good **100%**		
Economic Code **None**		
0.None	3.No Power	7.
1.Location	4.Generate	8.
2.Encroach	9.None	9.
Entrance Code **5 Estimated**		
1.Interior	4.Vacant	7.
2.Refusal	5.Estimate	8.
3.Informed	6.Reviewed	9.
Information Code **5 Estimate**		
1.Owner	4.Agent	7.
2.Relative	5.Estimate	8.
3.Tenant	6.Other	9.

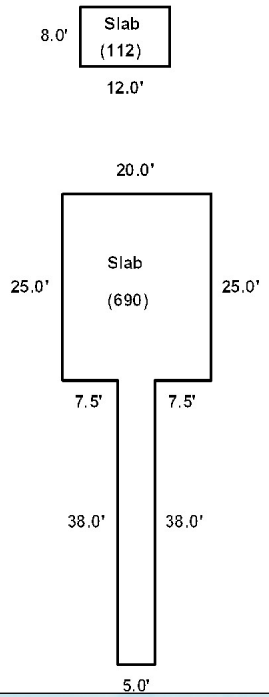

Date Inspected 10/27/2018

Additions, Outbuildings & Improvements

Type	Year	Units	Grade	Cond	Phys.	Funct.	Sound Value
48 Concrete Slab	2018	690	3 100	4	0 %	100 %	
48 Concrete Slab	2018	112	3 100	4	0 %	100 %	
					%	%	
					%	%	
					%	%	
					%	%	
					%	%	
					%	%	
					%	%	
					%	%	

1.One Story Fram
2.Two Story Fram
3.Three Story Fr
4.1 & 1/2 Story
5.1 & 3/4 Story
6.2 & 1/2 Story
21.Open Frame Por
22.Encl Frame Por
23.Frame Garage
24.Frame Shed
25.Frame Bay Wind
26.1SFr Overhang
27.Unfin Basement
28.Unfinished Att
29.Finished Attic

Map Lot 012-052 | Account 800 | Location 1267 Main Street | Card 1 Of 1 | 11/19/2020

Salmon Brook Historical Society

1267 Main Street

Washburn ME 04786
B1790P118

Property Data

Neighborhood **1 Neighborhood One**

Tree Growth Year **0**

1ST MORTGAGE **0**

2ND MORTGAGE **0**

Zone/Land Use **1 Residential**

Secondary Zone

Topography **1 Level**

1.Level	4.Below St	7.LevelBog
2.Rolling	5.Low	8.
3.Above St	6.Swampy	9.

Utilities **2 Public Water** **3 Public Sewer**

1.Public	4.Dr Well	7.Cesspool
2.Water	5.Dug Well	8.
3.Sewer	6.Septic	9.None

Street **1 Paved**

1.Paved	4.Proposed	7.
2.Semi Imp	5.R/O/W	8.
3.Gravel	6.	9.None

TG PLAN YEAR **0**

Tif District # **0**

Sale Data

Sale Date

Price

Sale Type

1.Land	4.Mobile	7.C/I L&B
2.L & B	5.Other	8.
3.Building	6.C/I Land	9.

Financing

1.Convent	4.Seller	7.
2.FHA/VA	5.Private	8.
3.Assumed	6.Cash	9.Unknown

Validity

1.Valid	4.Split	7.Renovate
2.Related	5.Partial	8.Other
3.Distress	6.Exempt	9.

Verified

1.Buyer	4.Agent	7.Family
2.Seller	5.Pub Rec	8.Other
3.Lender	6.MLS	9.

Assessment Record

Year	Land	Buildings	Exempt	Total
2007	4,800	90,600	95,400	0
2008	4,800	90,600	95,400	0
2009	4,800	94,500	99,300	0
2012	4,800	94,500	99,300	0
2013	6,300	94,500	100,800	0
2015	6,300	94,500	100,800	0
2018	6,300	94,500	100,800	0
2019	9,800	142,100	151,900	0
2020	9,800	142,100	151,900	0

Land Data

Front Foot	Type	Effective Frontage	Effective Depth	Influence Factor	Influence Code
11.Regular Lot				%	
12.Delta Triangle				%	
13.Nabla Triangle				%	
14.Rear Land				%	
15.Class I Road				%	
				%	
				%	
Square Foot		**Square Feet**			
16.Class II Road				%	
17.Municipal Rese				%	
18.Munic Sep Lago				%	
19.Gravel Pit				%	
20.Industrial Bas				%	
				%	
				%	
Fract. Acre		**Acreage/Sites**			
21.Developed Pave	21	0.35		100 %	0
22.Undev Paved (F				%	
23.Developed Grav				%	
Acres				%	
24.Undev Gravel (				%	
25.Comm Base Pave				%	
26.Comm Base Grav				%	
27.Backlot				%	
28.Rear Land				%	
29.Pavement				%	

Total Acreage 0.35

Influence Codes

1.Unimproved
2.Excess Frtg
3.Topography
4.Size/Shape
5.Access
6.Restriction
7.Open Space
8.View/Environ
9.Fract Share
Acres
30.Utility R O W
31.Tillable
32.Pasture
33.Orchard
34.Softwood F&O
35.Mixed Wood F&O
36.Hardwood F&O
37.Softwood TG
38.Mixed Wood TG
39.Hardwood TG
40.Wasteland
41.Open Space
42.Mobile Home Si
43.Condo Site
44.Lot Improvemen
45.Subdivision Lo
46.Heavy Ind Sit

Inspection Witnessed By:

X Date

No./Date	Description	Date Insp.

Notes:

*5-10-2019 -10% for attached shed and barn. -20% for attached shed behind barn, -15% for size obs on 1.75 SF Barn.

Washburn

Washburn

Map Lot 012-052 | Account 800 | Location 1267 Main Street | Card 1 Of 1 | 11/19/2020

Building Style	**4 Cape Cod**		
1.Conv.	5.Garrison	9.Gambrel	
2.Ranch	6.Salt Box	10.Other	
3.R Ranch	7.Contemp	11.Split	
4.Cape	8.Log	12.	
Dwelling Units	**1**		
Other Units	**0**		
Stories	**4 One & 1/2 Story**		
1.1	4.1.5	7.	
2.2	5.1.75	8.	
3.3	6.2.5	9.	
Exterior Walls	**1 Wood Siding**		
1.Wood	5.Stucco	9.T-111	
2.Vin/Al	6.Brick	10.Other	
3.Compos.	7.Stone	11.	
4.Asbestos	8.Concrete	12.	
Roof Surface	**1 Asphalt Shingles**		
1.Asphalt	4.Composit	7.	
2.Slate	5.Wood	8.	
3.Metal	6.Other	9.	
SF Masonry Trim	**0**		
OPEN-3-CUSTOM	**0**		
OPEN-4-CUSTOM	**0**		
Year Built	**1900**		
Year Remodeled	**0**		
Foundation	**3 Brick &/or Stone**		
1.Concrete	4.Wood	7.	
2.C Block	5.Slab	8.	
3.Br/Stone	6.Piers	9.	
Basement	**4 Full Basement**		
1.1/4 Bmt	4.Full Bmt	7.	
2.1/2 Bmt	5.None	8.	
3.3/4 Bmt	6.	9.None	
Bsmt Gar # Cars	**0**		
Wet Basement	**1 Dry Basement**		
1.Dry	4.	7.	
2.Damp	5.	8.	
3.Wet	6.	9.	

SF Bsmt Living	**0**		
Fin Bsmt Grade	**0 0**		
OPEN 5 OPTIONAL	**0**		
Heat Type	**100%**	**5 Forced Warm Air**	
1.HWBB	5.FWA	9.No Heat	
2.HWCI	6.GravWA	10.	
3.H Pump	7.Electric	11.	
4.Steam	8.Fl/Wall	12.	
Cool Type	**0%**	**9 None**	
1.Refrig	4.W&C Air	7.	
2.Evapor	5.	8.	
3.H Pump	6.	9.None	
Kitchen Style	**2 Typical**		
1.Modern	4.Obsolete	7.	
2.Typical	5.	8.	
3.Old Type	6.	9.None	
Bath(s) Style	**2 Typical Bath(s)**		
1.Modern	4.Obsolete	7.	
2.Typical	5.	8.	
3.Old Type	6.	9.None	
# Rooms	**8**		
# Bedrooms	**4**		
# Full Baths	**1**		
# Half Baths	**1**		
# Addn Fixtures	**0**		
# Fireplaces	**1**		

TRIO Software
A Division of Harris Computer Systems

Layout	**1 Typical**		
1.Typical	4.	7.	
2.Inadeq	5.	8.	
3.Poor	6.	9.	
Attic	**9 None**		
1.1/4 Fin	4.Full Fin	7.	
2.1/2 Fin	5.Fl/Stair	8.	
3.3/4 Fin	6.	9.None	
Insulation	**1 Full**		
1.Full	4.Minimal	7.	
2.Heavy	5.Partial	8.	
3.Capped	6.	9.None	
Unfinished %	**0%**		
Grade & Factor	**2 Fair 115%**		
1.E Grade	4.B Grade	7.	
2.D Grade	5.A Grade	8.SC Grade	
3.C Grade	6.AA Grade	9.Same	
SQFT (Footprint)	**1353**		
Condition	**6 Good**		
1.Poor	4.Avg	7.V G	
2.Fair	5.Avg+	8.Exc	
3.Avg-	6.Good	9.Same	
Phys. % Good	**0%**		
Funct. % Good	**100%**		
Functional Code	**9 None**		
1.Incomp	4.Delap	7.No Power	
2.O-Built	5.Bsmt	8.LongTerm	
3.Damage	6.Common	9.None	
Econ. % Good	**100%**		
Economic Code	**None**		
0.None	3.No Power	7.	
1.Location	4.Generate	8.	
2.Encroach	9.None	9.	
Entrance Code	**5 Estimated**		
1.Interior	4.Vacant	7.	
2.Refusal	5.Estimate	8.	
3.Informed	6.Reviewed	9.	
Information Code	**5 Estimate**		
1.Owner	4.Agent	7.	
2.Relative	5.Estimate	8.	
3.Tenant	6.Other	9.	

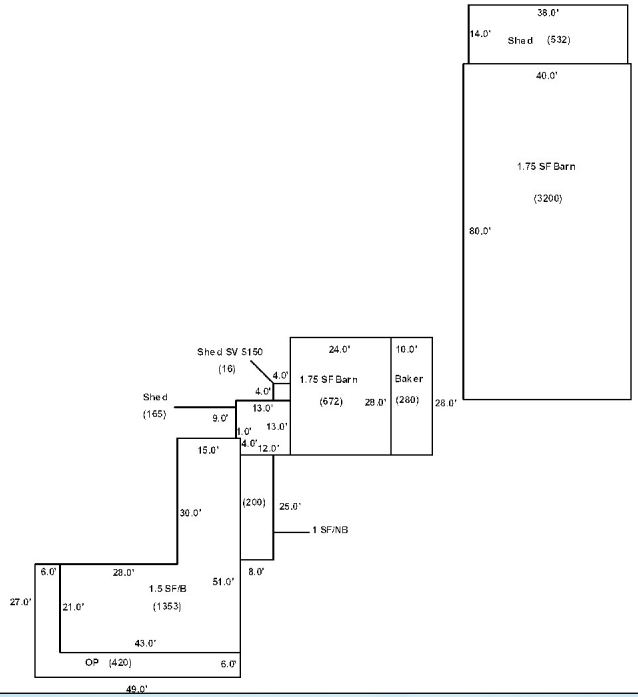

Date Inspected 10/27/2018

Additions, Outbuildings & Improvements

Type	Year	Units	Grade	Cond	Phys.	Funct.	Sound Value
21 Open Frame	1950	420	3 100	5	0 %	100 %	
1 One Story Frame	1940	200	3 90	5	0 %	100 %	
24 Frame Shed	1940	165	2 115	4	0 %	90 %	
60 2 Story Barn	1940	672	3 90	5	0 %	90 %	
58 Baker	1940	280	3 100	4	0 %	100 %	
116 1.75 Story Barn	1940	3200	3 90	5	0 %	85 %	
24 Frame Shed	1940	532	2 115	4	0 %	80 %	
24 Frame Shed	0				%	%	150
					%	%	
					%	%	

1.One Story Fram
2.Two Story Fram
3.Three Story Fr
4.1 & 1/2 Story
5.1 & 3/4 Story
6.2 & 1/2 Story
21.Open Frame Por
22.Encl Frame Por
23.Frame Garage
24.Frame Shed
25.Frame Bay Wind
26.1SFr Overhang
27.Unfin Basement
28.Unfinished Att
29.Finished Attic

Map Lot 012-053 Account 59 Location 14 WILDER STREET Card 1 Of 1 11/19/2020

PALMER, NATHANIEL S.

P.O. BOX 204

ENFIELD ME 04493
B5949P329

Previous Owner
TD BANK, N.A.
2035 LIMESTONE ROAD

WILMINGTON DE 19808
Sale Date: 10/17/2019

Previous Owner
CANNON, RICKY D.
CANNON, MISTIE D.
P.O. BOX 535
WASHBURN ME 04786
Sale Date: 11/19/2018

Inspection Witnessed By:

X Date

No./Date	Description	Date Insp.

Notes:
*5-10-2019 -20% for delap.

Washburn

Property Data

Neighborhood	**1 Neighborhood One**
Tree Growth Year	**0**
1ST MORTGAGE	**0**
2ND MORTGAGE	**0**
Zone/Land Use	**1 Residential**
Secondary Zone	
Topography	**1 Level**

1.Level	4.Below St	7.LevelBog
2.Rolling	5.Low	8.
3.Above St	6.Swampy	9.

Utilities **2 Public Water** **3 Public Sewer**

1.Public	4.Dr Well	7.Cesspool
2.Water	5.Dug Well	8.
3.Sewer	6.Septic	9.None

Street **1 Paved**

1.Paved	4.Proposed	7.
2.Semi Imp	5.R/O/W	8.
3.Gravel	6.	9.None

TG PLAN YEAR	**0**
Tif District #	**0**

Sale Data

Sale Date	**10/17/2019**
Price	**15,000**
Sale Type	**2 Land & Buildings**

1.Land	4.Mobile	7.C/I L&B
2.L & B	5.Other	8.
3.Building	6.C/I Land	9.

Financing **9 Unknown**

1.Convent	4.Seller	7.
2.FHA/VA	5.Private	8.
3.Assumed	6.Cash	9.Unknown

Validity **3 Distressed Sale**

1.Valid	4.Split	7.Renovate
2.Related	5.Partial	8.Other
3.Distress	6.Exempt	9.

Verified **5 Public Record**

1.Buyer	4.Agent	7.Family
2.Seller	5.Pub Rec	8.Other
3.Lender	6.MLS	9.

Assessment Record

Year	Land	Buildings	Exempt	Total
2007	3,600	41,700	13,000	32,300
2008	3,600	41,700	13,000	32,300
2009	3,600	41,700	9,000	36,300
2012	3,600	41,700	8,800	36,500
2013	4,700	41,700	8,800	37,600
2015	4,700	41,700	9,000	37,400
2018	4,700	41,700	18,400	28,000
2019	9,300	43,200	0	52,500
2020	9,300	43,200	0	52,500

Land Data

Front Foot	Type	Effective Frontage	Effective Depth	Influence Factor	Influence Code
11.Regular Lot				%	
12.Delta Triangle				%	
13.Nabla Triangle				%	
14.Rear Land				%	
15.Class I Road				%	
				%	
				%	
Square Foot		**Square Feet**			
16.Class II Road	29	1,000		50 %	0
17.Municipal Rese				%	
18.Munic Sep Lago				%	
19.Gravel Pit				%	
20.Industrial Bas				%	
				%	
				%	
Fract. Acre		**Acreage/Sites**			
21.Developed Pave	21	0.24		100 %	0
22.Undev Paved (F				%	
23.Developed Grav				%	
Acres				%	
24.Undev Gravel (				%	
25.Comm Base Pave				%	
26.Comm Base Grav				%	
27.Backlot				%	
28.Rear Land				%	
29.Pavement				%	

Total Acreage 0.24

Influence Codes

1.Unimproved
2.Excess Frtg
3.Topography
4.Size/Shape
5.Access
6.Restriction
7.Open Space
8.View/Environ
9.Fract Share
Acres
30.Utility R O W
31.Tillable
32.Pasture
33.Orchard
34.Softwood F&O
35.Mixed Wood F&O
36.Hardwood F&O
37.Softwood TG
38.Mixed Wood TG
39.Hardwood TG
40.Wasteland
41.Open Space
42.Mobile Home Si
43.Condo Site
44.Lot Improvemen
45.Subdivision Lo
46.Heavy Ind Sit

Washburn

Map Lot 012-053 | Account 59 | Location 14 WILDER STREET | Card 1 Of 1 | 11/19/2020

Building Style	**4 Cape Cod**		
1.Conv.	5.Garrison	9.Gambrel	
2.Ranch	6.Salt Box	10.Other	
3.R Ranch	7.Contemp	11.Split	
4.Cape	8.Log	12.	
Dwelling Units	**1**		
Other Units	**0**		
Stories	**4 One & 1/2 Story**		
1.1	4.1.5	7.	
2.2	5.1.75	8.	
3.3	6.2.5	9.	
Exterior Walls	**1 Wood Siding**		
1.Wood	5.Stucco	9.T-111	
2.Vin/Al	6.Brick	10.Other	
3.Compos.	7.Stone	11.	
4.Asbestos	8.Concrete	12.	
Roof Surface	**3 Sheet Metal**		
1.Asphalt	4.Composit	7.	
2.Slate	5.Wood	8.	
3.Metal	6.Other	9.	
SF Masonry Trim	**0**		
OPEN-3-CUSTOM	**0**		
OPEN-4-CUSTOM	**0**		
Year Built	**1940**		
Year Remodeled	**0**		
Foundation	**1 Concrete**		
1.Concrete	4.Wood	7.	
2.C Block	5.Slab	8.	
3.Br/Stone	6.Piers	9.	
Basement	**4 Full Basement**		
1.1/4 Bmt	4.Full Bmt	7.	
2.1/2 Bmt	5.None	8.	
3.3/4 Bmt	6.	9.None	
Bsmt Gar # Cars	**0**		
Wet Basement	**1 Dry Basement**		
1.Dry	4.	7.	
2.Damp	5.	8.	
3.Wet	6.	9.	

SF Bsmt Living	**0**		
Fin Bsmt Grade	**0 0**		
OPEN 5 OPTIONAL	**0**		
Heat Type	**100%**	**5 Forced Warm Air**	
1.HWBB	5.FWA	9.No Heat	
2.HWCI	6.GravWA	10.	
3.H Pump	7.Electric	11.	
4.Steam	8.Fl/Wall	12.	
Cool Type	**0%**	**9 None**	
1.Refrig	4.W&C Air	7.	
2.Evapor	5.	8.	
3.H Pump	6.	9.None	
Kitchen Style	**2 Typical**		
1.Modern	4.Obsolete	7.	
2.Typical	5.	8.	
3.Old Type	6.	9.None	
Bath(s) Style	**2 Typical Bath(s)**		
1.Modern	4.Obsolete	7.	
2.Typical	5.	8.	
3.Old Type	6.	9.None	
# Rooms	**6**		
# Bedrooms	**3**		
# Full Baths	**1**		
# Half Baths	**1**		
# Addn Fixtures	**0**		
# Fireplaces	**0**		

TRIO Software
A Division of Harris Computer Systems

Layout	**1 Typical**		
1.Typical	4.	7.	
2.Inadeq	5.	8.	
3.Poor	6.	9.	
Attic	**9 None**		
1.1/4 Fin	4.Full Fin	7.	
2.1/2 Fin	5.Fl/Stair	8.	
3.3/4 Fin	6.	9.None	
Insulation	**4 Minimal**		
1.Full	4.Minimal	7.	
2.Heavy	5.Partial	8.	
3.Capped	6.	9.None	
Unfinished %	**0%**		
Grade & Factor	**2 Fair 110%**		
1.E Grade	4.B Grade	7.	
2.D Grade	5.A Grade	8.SC Grade	
3.C Grade	6.AA Grade	9.Same	
SQFT (Footprint)	**813**		
Condition	**3 Below Average**		
1.Poor	4.Avg	7.V G	
2.Fair	5.Avg+	8.Exc	
3.Avg-	6.Good	9.Same	
Phys. % Good	**0%**		
Funct. % Good	**90%**		
Functional Code	**4 Delapidation**		
1.Incomp	4.Delap	7.No Power	
2.O-Built	5.Bsmt	8.LongTerm	
3.Damage	6.Common	9.None	
Econ. % Good	**100%**		
Economic Code	**None**		
0.None	3.No Power	7.	
1.Location	4.Generate	8.	
2.Encroach	9.None	9.	
Entrance Code	**5 Estimated**		
1.Interior	4.Vacant	7.	
2.Refusal	5.Estimate	8.	
3.Informed	6.Reviewed	9.	
Information Code	**5 Estimate**		
1.Owner	4.Agent	7.	
2.Relative	5.Estimate	8.	
3.Tenant	6.Other	9.	

Date Inspected 10/27/2018

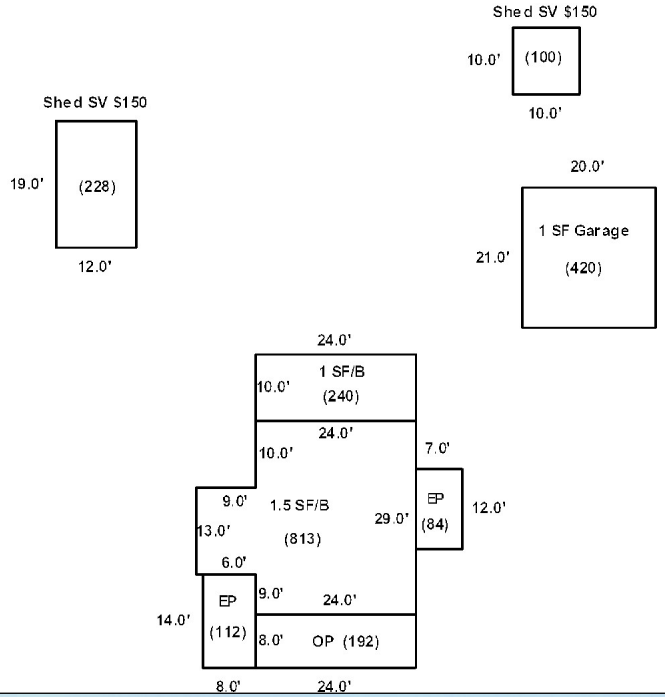

Additions, Outbuildings & Improvements

Type	Year	Units	Grade	Cond	Phys.	Funct.	Sound Value
21 Open Frame	1940	192	9 100	9	0 %	100 %	
22 Encl Frame Porch	1940	112	9 100	9	0 %	90 %	
22 Encl Frame Porch	1940	84	9 100	9	0 %	90 %	
20 1 Story/Bsmt	1940	240	9 100	9	0 %	90 %	
23 Frame Garage	1940	420	3 95	3	0 %	100 %	
24 Frame Shed	0				%	%	150
24 Frame Shed	0				%	%	150
					%	%	
					%	%	
					%	%	

1.One Story Fram
2.Two Story Fram
3.Three Story Fr
4.1 & 1/2 Story
5.1 & 3/4 Story
6.2 & 1/2 Story
21.Open Frame Por
22.Encl Frame Por
23.Frame Garage
24.Frame Shed
25.Frame Bay Wind
26.1SFr Overhang
27.Unfin Basement
28.Unfinished Att
29.Finished Attic

Map Lot 012-054 | Account 260 | Location 16 WILDER STREET | Card 1 Of 1 | 11/19/2020

KECK, MARIANNE

16 WILDER STREET

WASHBURN ME 04786
B5953P134 B5991P286 B6006P46

Previous Owner
WILMINGTON SAVINGS FUND SOCIETY, FSB AS TRUSTEE OF
STANWICH MORTGAGE LOAN TRUST A
1600 SOUTH DOUGLASS ROAD, SUITE 200-A
ANAHEIM CA 92806
Sale Date: 4/01/2020

Previous Owner
Miller, James F.
13 Liberty Avenue

Gray ME 04039
Sale Date: 4/12/2013

Previous Owner
Conley, Brent
Conley, Margo
P.O. Box 442
Washburn ME 04786
Sale Date: 7/21/2008

Inspection Witnessed By:

X Date

No./Date	Description	Date Insp.

Notes:
*1-28-2019 Dwelling appeared vacant at time of reval.

Washburn

Property Data

Neighborhood **1 Neighborhood One**

Tree Growth Year **0**

1ST MORTGAGE **0**

2ND MORTGAGE **0**

Zone/Land Use **1 Residential**

Secondary Zone

Topography **1 Level**

1.Level	4.Below St	7.LevelBog
2.Rolling	5.Low	8.
3.Above St	6.Swampy	9.

Utilities **2 Public Water** **3 Public Sewer**

1.Public	4.Dr Well	7.Cesspool
2.Water	5.Dug Well	8.
3.Sewer	6.Septic	9.None

Street **1 Paved**

1.Paved	4.Proposed	7.
2.Semi Imp	5.R/O/W	8.
3.Gravel	6.	9.None

TG PLAN YEAR **0**

Tif District # **0**

Sale Data

Sale Date **4/01/2020**

Price **19,900**

Sale Type **2 Land & Buildings**

1.Land	4.Mobile	7.C/I L&B
2.L & B	5.Other	8.
3.Building	6.C/I Land	9.

Financing **1 Conventional**

1.Convent	4.Seller	7.
2.FHA/VA	5.Private	8.
3.Assumed	6.Cash	9.Unknown

Validity **1 Arms Length Sale**

1.Valid	4.Split	7.Renovate
2.Related	5.Partial	8.Other
3.Distress	6.Exempt	9.

Verified **5 Public Record**

1.Buyer	4.Agent	7.Family
2.Seller	5.Pub Rec	8.Other
3.Lender	6.MLS	9.

Assessment Record

Year	Land	Buildings	Exempt	Total
2007	2,500	71,100	13,000	60,600
2008	2,500	71,100	13,000	60,600
2009	2,500	71,100	9,000	64,600
2012	2,500	71,100	0	73,600
2013	3,200	71,100	0	74,300
2015	3,200	71,100	0	74,300
2018	3,200	71,100	0	74,300
2019	6,800	51,500	0	58,300
2020	6,800	51,500	0	58,300

Land Data

Front Foot	Type	Effective Frontage	Effective Depth	Influence Factor	Influence Code
11.Regular Lot				%	
12.Delta Triangle				%	
13.Nabla Triangle				%	
14.Rear Land				%	
15.Class I Road				%	
				%	
				%	
Square Foot		**Square Feet**			
16.Class II Road				%	
17.Municipal Rese				%	
18.Munic Sep Lago				%	
19.Gravel Pit				%	
20.Industrial Bas				%	
				%	
				%	
Fract. Acre		**Acreage/Sites**			
21.Developed Pave	21	0.17		100 %	0
22.Undev Paved (F				%	
23.Developed Grav				%	
Acres				%	
24.Undev Gravel (				%	
25.Comm Base Pave				%	
26.Comm Base Grav				%	
27.Backlot				%	
28.Rear Land				%	
29.Pavement				%	

Total Acreage 0.17

Influence Codes

1.Unimproved
2.Excess Frtg
3.Topography
4.Size/Shape
5.Access
6.Restriction
7.Open Space
8.View/Environ
9.Fract Share
Acres
30.Utility R O W
31.Tillable
32.Pasture
33.Orchard
34.Softwood F&O
35.Mixed Wood F&O
36.Hardwood F&O
37.Softwood TG
38.Mixed Wood TG
39.Hardwood TG
40.Wasteland
41.Open Space
42.Mobile Home Si
43.Condo Site
44.Lot Improvemen
45.Subdivision Lo
46.Heavy Ind Sit

Washburn

Map Lot 012-054 | Account 260 | Location 16 WILDER STREET | Card 1 Of 1 | 11/19/2020

Building Style	**1 Conventional**		
1.Conv.	5.Garrison	9.Gambrel	
2.Ranch	6.Salt Box	10.Other	
3.R Ranch	7.Contemp	11.Split	
4.Cape	8.Log	12.	
Dwelling Units	**1**		
Other Units	**0**		
Stories	**2 Two Story**		
1.1	4.1.5	7.	
2.2	5.1.75	8.	
3.3	6.2.5	9.	
Exterior Walls	**1 Wood Siding**		
1.Wood	5.Stucco	9.T-111	
2.Vin/Al	6.Brick	10.Other	
3.Compos.	7.Stone	11.	
4.Asbestos	8.Concrete	12.	
Roof Surface	**1 Asphalt Shingles**		
1.Asphalt	4.Composit	7.	
2.Slate	5.Wood	8.	
3.Metal	6.Other	9.	
SF Masonry Trim	**0**		
OPEN-3-CUSTOM	**0**		
OPEN-4-CUSTOM	**0**		
Year Built	**1950**		
Year Remodeled	**0**		
Foundation	**1 Concrete**		
1.Concrete	4.Wood	7.	
2.C Block	5.Slab	8.	
3.Br/Stone	6.Piers	9.	
Basement	**4 Full Basement**		
1.1/4 Bmt	4.Full Bmt	7.	
2.1/2 Bmt	5.None	8.	
3.3/4 Bmt	6.	9.None	
Bsmt Gar # Cars	**0**		
Wet Basement	**1 Dry Basement**		
1.Dry	4.	7.	
2.Damp	5.	8.	
3.Wet	6.	9.	

SF Bsmt Living	**0**		
Fin Bsmt Grade	**0 0**		
OPEN 5 OPTIONAL	**0**		
Heat Type	**100%**	**5 Forced Warm Air**	
1.HWBB	5.FWA	9.No Heat	
2.HWCI	6.GravWA	10.	
3.H Pump	7.Electric	11.	
4.Steam	8.Fl/Wall	12.	
Cool Type	**0%**	**9 None**	
1.Refrig	4.W&C Air	7.	
2.Evapor	5.	8.	
3.H Pump	6.	9.None	
Kitchen Style	**2 Typical**		
1.Modern	4.Obsolete	7.	
2.Typical	5.	8.	
3.Old Type	6.	9.None	
Bath(s) Style	**2 Typical Bath(s)**		
1.Modern	4.Obsolete	7.	
2.Typical	5.	8.	
3.Old Type	6.	9.None	
# Rooms	**6**		
# Bedrooms	**3**		
# Full Baths	**1**		
# Half Baths	**1**		
# Addn Fixtures	**0**		
# Fireplaces	**0**		

TRIO Software
A Division of Harris Computer Systems

Layout	**1 Typical**		
1.Typical	4.	7.	
2.Inadeq	5.	8.	
3.Poor	6.	9.	
Attic	**9 None**		
1.1/4 Fin	4.Full Fin	7.	
2.1/2 Fin	5.Fl/Stair	8.	
3.3/4 Fin	6.	9.None	
Insulation	**1 Full**		
1.Full	4.Minimal	7.	
2.Heavy	5.Partial	8.	
3.Capped	6.	9.None	
Unfinished %	**0%**		
Grade & Factor	**2 Fair 110%**		
1.E Grade	4.B Grade	7.	
2.D Grade	5.A Grade	8.SC Grade	
3.C Grade	6.AA Grade	9.Same	
SQFT (Footprint)	**616**		
Condition	**5 Above Average**		
1.Poor	4.Avg	7.V G	
2.Fair	5.Avg+	8.Exc	
3.Avg-	6.Good	9.Same	
Phys. % Good	**0%**		
Funct. % Good	**100%**		
Functional Code	**9 None**		
1.Incomp	4.Delap	7.No Power	
2.O-Built	5.Bsmt	8.LongTerm	
3.Damage	6.Common	9.None	
Econ. % Good	**100%**		
Economic Code	**None**		
0.None	3.No Power	7.	
1.Location	4.Generate	8.	
2.Encroach	9.None	9.	
Entrance Code	**5 Estimated**		
1.Interior	4.Vacant	7.	
2.Refusal	5.Estimate	8.	
3.Informed	6.Reviewed	9.	
Information Code	**5 Estimate**		
1.Owner	4.Agent	7.	
2.Relative	5.Estimate	8.	
3.Tenant	6.Other	9.	

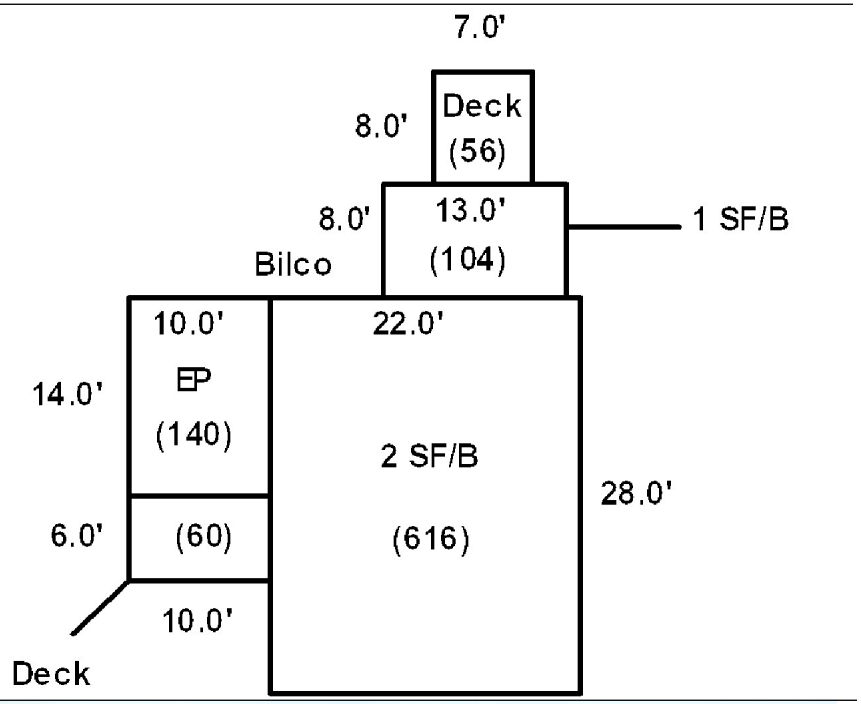

Date Inspected 10/27/2018

Additions, Outbuildings & Improvements

Type	Year	Units	Grade	Cond	Phys.	Funct.	Sound Value
68 Wood Deck	1980	60	3 100	3	0 %	100 %	
22 Encl Frame Porch	1950	140	3 90	4	0 %	100 %	
20 1 Story/Bsmt	1950	104	9 100	9	0 %	100 %	
68 Wood Deck	1980	56	3 95	3	0 %	100 %	
					%	%	
					%	%	
					%	%	
					%	%	
					%	%	
					%	%	

1.One Story Fram
2.Two Story Fram
3.Three Story Fr
4.1 & 1/2 Story
5.1 & 3/4 Story
6.2 & 1/2 Story
21.Open Frame Por
22.Encl Frame Por
23.Frame Garage
24.Frame Shed
25.Frame Bay Wind
26.1SFr Overhang
27.Unfin Basement
28.Unfinished Att
29.Finished Attic

Map Lot 012-055 Account 1084 Location 18 Wilder Street Card 1 Of 1 11/19/2020

Saucier, Peter J.

P.O. Box 442

Washburn ME 04786
B5762P255

Previous Owner
Saucier, Brandi Lee
P.O. Box 442

Washburn ME 04786
Sale Date: 4/06/2018

Previous Owner
Saucier, Peter J.
Saucier, Brandi Lee
P.O. Box 442
Washburn ME 04786
Sale Date: 4/06/2018

Previous Owner
Bagley, Breen S.
Bagley, Marria L.
P.O. Box 460
Washburn ME 04786
Sale Date: 11/23/2009

Inspection Witnessed By:

X Date

No./Date	Description	Date Insp.

Notes:
*5-10-2019 -20% for attached shed.

Property Data

Neighborhood **1 Neighborhood One**

Tree Growth Year **0**

1ST MORTGAGE **0**

2ND MORTGAGE **0**

Zone/Land Use **1 Residential**

Secondary Zone

Topography **1 Level**

1.Level 4.Below St 7.LevelBog
2.Rolling 5.Low 8.
3.Above St 6.Swampy 9.

Utilities **2 Public Water** **3 Public Sewer**

1.Public 4.Dr Well 7.Cesspool
2.Water 5.Dug Well 8.
3.Sewer 6.Septic 9.None

Street **1 Paved**

1.Paved 4.Proposed 7.
2.Semi Imp 5.R/O/W 8.
3.Gravel 6. 9.None

TG PLAN YEAR **0**

Tif District # **0**

Sale Data

Sale Date **4/06/2018**

Price **80,000**

Sale Type **2 Land & Buildings**

1.Land 4.Mobile 7.C/I L&B
2.L & B 5.Other 8.
3.Building 6.C/I Land 9.

Financing **1 Conventional**

1.Convent 4.Seller 7.
2.FHA/VA 5.Private 8.
3.Assumed 6.Cash 9.Unknown

Validity **2 Related Parties**

1.Valid 4.Split 7.Renovate
2.Related 5.Partial 8.Other
3.Distress 6.Exempt 9.

Verified **5 Public Record**

1.Buyer 4.Agent 7.Family
2.Seller 5.Pub Rec 8.Other
3.Lender 6.MLS 9.

Assessment Record

Year	Land	Buildings	Exempt	Total
2007	4,600	63,300	13,000	54,900
2008	4,600	74,100	13,000	65,700
2009	4,600	74,100	0	78,700
2012	4,600	74,100	8,800	69,900
2013	5,900	74,100	8,800	71,200
2015	5,900	74,100	9,000	71,000
2018	5,900	74,100	18,400	61,600
2019	10,000	72,100	20,000	62,100
2020	10,000	72,100	25,000	57,100

Land Data

Front Foot	Type	Effective Frontage	Effective Depth	Influence Factor	Influence Code
11.Regular Lot				%	
12.Delta Triangle				%	
13.Nabla Triangle				%	
14.Rear Land				%	
15.Class I Road				%	
				%	
				%	
Square Foot		**Square Feet**			
16.Class II Road	29	600		75 %	0
17.Municipal Rese				%	
18.Munic Sep Lago				%	
19.Gravel Pit				%	
20.Industrial Bas				%	
				%	
				%	
Fract. Acre		**Acreage/Sites**			
21.Developed Pave	21	0.29		100 %	0
22.Undev Paved (F				%	
23.Developed Grav				%	
Acres				%	
24.Undev Gravel (				%	
25.Comm Base Pave				%	
26.Comm Base Grav				%	
27.Backlot				%	
28.Rear Land				%	
29.Pavement				%	

Total Acreage 0.29

Influence Codes

1.Unimproved
2.Excess Frtg
3.Topography
4.Size/Shape
5.Access
6.Restriction
7.Open Space
8.View/Environ
9.Fract Share
Acres
30.Utility R O W
31.Tillable
32.Pasture
33.Orchard
34.Softwood F&O
35.Mixed Wood F&O
36.Hardwood F&O
37.Softwood TG
38.Mixed Wood TG
39.Hardwood TG
40.Wasteland
41.Open Space
42.Mobile Home Si
43.Condo Site
44.Lot Improvemen
45.Subdivision Lo
46.Heavy Ind Sit

Washburn

Washburn

Map Lot 012-055 | Account 1084 | Location 18 Wilder Street | Card 1 Of 1 | 11/19/2020

Building Style	**9 Gambrel**		
1.Conv.	5.Garrison	9.Gambrel	
2.Ranch	6.Salt Box	10.Other	
3.R Ranch	7.Contemp	11.Split	
4.Cape	8.Log	12.	
Dwelling Units	**1**		
Other Units	**0**		
Stories	**2 Two Story**		
1.1	4.1.5	7.	
2.2	5.1.75	8.	
3.3	6.2.5	9.	
Exterior Walls	**1 Wood Siding**		
1.Wood	5.Stucco	9.T-111	
2.Vin/Al	6.Brick	10.Other	
3.Compos.	7.Stone	11.	
4.Asbestos	8.Concrete	12.	
Roof Surface	**3 Sheet Metal**		
1.Asphalt	4.Composit	7.	
2.Slate	5.Wood	8.	
3.Metal	6.Other	9.	
SF Masonry Trim	**0**		
OPEN-3-CUSTOM	**0**		
OPEN-4-CUSTOM	**0**		
Year Built	**1950**		
Year Remodeled	**0**		
Foundation	**1 Concrete**		
1.Concrete	4.Wood	7.	
2.C Block	5.Slab	8.	
3.Br/Stone	6.Piers	9.	
Basement	**4 Full Basement**		
1.1/4 Bmt	4.Full Bmt	7.	
2.1/2 Bmt	5.None	8.	
3.3/4 Bmt	6.	9.None	
Bsmt Gar # Cars	**0**		
Wet Basement	**1 Dry Basement**		
1.Dry	4.	7.	
2.Damp	5.	8.	
3.Wet	6.	9.	

SF Bsmt Living	**0**		
Fin Bsmt Grade	**0 0**		
OPEN 5 OPTIONAL	**0**		
Heat Type	**100%**	**5 Forced Warm Air**	
1.HWBB	5.FWA	9.No Heat	
2.HWCI	6.GravWA	10.	
3.H Pump	7.Electric	11.	
4.Steam	8.Fl/Wall	12.	
Cool Type	**0%**	**9 None**	
1.Refrig	4.W&C Air	7.	
2.Evapor	5.	8.	
3.H Pump	6.	9.None	
Kitchen Style	**2 Typical**		
1.Modern	4.Obsolete	7.	
2.Typical	5.	8.	
3.Old Type	6.	9.None	
Bath(s) Style	**2 Typical Bath(s)**		
1.Modern	4.Obsolete	7.	
2.Typical	5.	8.	
3.Old Type	6.	9.None	
# Rooms	**8**		
# Bedrooms	**4**		
# Full Baths	**1**		
# Half Baths	**0**		
# Addn Fixtures	**0**		
# Fireplaces	**1**		

TRIO Software
A Division of Harris Computer Systems

Layout	**1 Typical**		
1.Typical	4.	7.	
2.Inadeq	5.	8.	
3.Poor	6.	9.	
Attic	**9 None**		
1.1/4 Fin	4.Full Fin	7.	
2.1/2 Fin	5.Fl/Stair	8.	
3.3/4 Fin	6.	9.None	
Insulation	**1 Full**		
1.Full	4.Minimal	7.	
2.Heavy	5.Partial	8.	
3.Capped	6.	9.None	
Unfinished %	**0%**		
Grade & Factor	**3 Average 95%**		
1.E Grade	4.B Grade	7.	
2.D Grade	5.A Grade	8.SC Grade	
3.C Grade	6.AA Grade	9.Same	
SQFT (Footprint)	**832**		
Condition	**6 Good**		
1.Poor	4.Avg	7.V G	
2.Fair	5.Avg+	8.Exc	
3.Avg-	6.Good	9.Same	
Phys. % Good	**0%**		
Funct. % Good	**100%**		
Functional Code	**9 None**		
1.Incomp	4.Delap	7.No Power	
2.O-Built	5.Bsmt	8.LongTerm	
3.Damage	6.Common	9.None	
Econ. % Good	**100%**		
Economic Code	**None**		
0.None	3.No Power	7.	
1.Location	4.Generate	8.	
2.Encroach	9.None	9.	
Entrance Code	**3 Information Only**		
1.Interior	4.Vacant	7.	
2.Refusal	5.Estimate	8.	
3.Informed	6.Reviewed	9.	
Information Code	**2 Relative**		
1.Owner	4.Agent	7.	
2.Relative	5.Estimate	8.	
3.Tenant	6.Other	9.	

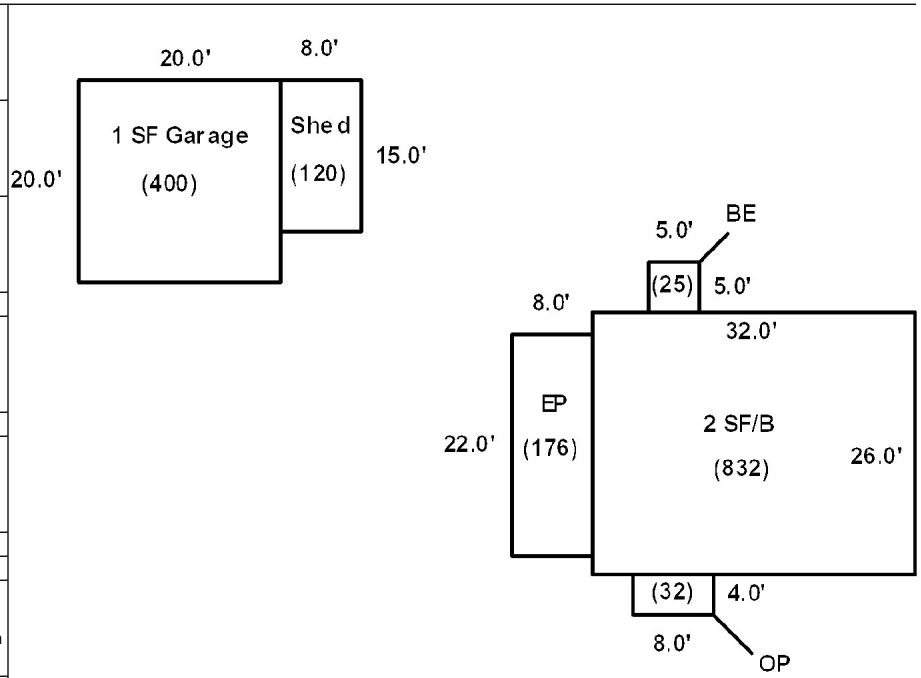

Date Inspected 11/12/2018

Additions, Outbuildings & Improvements

Type	Year	Units	Grade	Cond	Phys.	Funct.	Sound Value
21 Open Frame	1950	32	3 100	5	0 %	100 %	
22 Encl Frame Porch	1950	176	3 100	5	0 %	100 %	
40 Basement Entry	1950	25	9 100	9	0 %	100 %	
23 Frame Garage	1950	400	3 100	5	0 %	100 %	
24 Frame Shed	1950	120	3 95	4	0 %	80 %	
					%	%	
					%	%	
					%	%	
					%	%	
					%	%	

1.One Story Fram
2.Two Story Fram
3.Three Story Fr
4.1 & 1/2 Story
5.1 & 3/4 Story
6.2 & 1/2 Story
21.Open Frame Por
22.Encl Frame Por
23.Frame Garage
24.Frame Shed
25.Frame Bay Wind
26.1SFr Overhang
27.Unfin Basement
28.Unfinished Att
29.Finished Attic

Map Lot 012-056 | Account 228 | Location 22 WILDER STREET | Card 1 Of 1 | 11/19/2020

CHILTON, DEBORAH

22 WILDER STREET

WASHBURN ME 04786
B5634P210

Previous Owner
JPMORGAN CHASE BANK, NA
3415 VISION DRIVE

COLUMBUS OH 43219
Sale Date: 1/20/2017

Inspection Witnessed By:

X Date

No./Date	Description	Date Insp.

Notes:

Washburn

Property Data

Neighborhood **1 Neighborhood One**

Tree Growth Year **0**

1ST MORTGAGE **0**

2ND MORTGAGE **0**

Zone/Land Use **1 Residential**

Secondary Zone

Topography **1 Level**

1.Level	4.Below St	7.LevelBog
2.Rolling	5.Low	8.
3.Above St	6.Swampy	9.

Utilities **2 Public Water** **3 Public Sewer**

1.Public	4.Dr Well	7.Cesspool
2.Water	5.Dug Well	8.
3.Sewer	6.Septic	9.None

Street **1 Paved**

1.Paved	4.Proposed	7.
2.Semi Imp	5.R/O/W	8.
3.Gravel	6.	9.None

TG PLAN YEAR **0**

Tif District # **0**

Sale Data

Sale Date **1/20/2017**

Price **11,000**

Sale Type **2 Land & Buildings**

1.Land	4.Mobile	7.C/I L&B
2.L & B	5.Other	8.
3.Building	6.C/I Land	9.

Financing

1.Convent	4.Seller	7.
2.FHA/VA	5.Private	8.
3.Assumed	6.Cash	9.Unknown

Validity **3 Distressed Sale**

1.Valid	4.Split	7.Renovate
2.Related	5.Partial	8.Other
3.Distress	6.Exempt	9.

Verified **5 Public Record**

1.Buyer	4.Agent	7.Family
2.Seller	5.Pub Rec	8.Other
3.Lender	6.MLS	9.

Assessment Record

Year	Land	Buildings	Exempt	Total
2007	4,600	37,200	5,000	36,800
2008	4,600	37,200	19,000	22,800
2009	4,600	37,200	14,400	27,400
2012	4,600	37,200	14,080	27,720
2013	5,900	37,200	14,080	29,020
2015	5,900	37,200	14,400	28,700
2018	5,900	37,200	0	43,100
2019	10,300	56,500	0	66,800
2020	10,300	56,400	25,000	41,700

Land Data

Front Foot	Type	Effective Frontage	Effective Depth	Influence Factor	Influence Code
11.Regular Lot				%	
12.Delta Triangle				%	
13.Nabla Triangle				%	
14.Rear Land				%	
15.Class I Road				%	
				%	
				%	
Square Foot		**Square Feet**			
16.Class II Road	29	750		75 %	0
17.Municipal Rese				%	
18.Munic Sep Lago				%	
19.Gravel Pit				%	
20.Industrial Bas				%	
				%	
				%	
Fract. Acre		**Acreage/Sites**			
21.Developed Pave	21	0.29		100 %	0
22.Undev Paved (F				%	
23.Developed Grav				%	
Acres				%	
24.Undev Gravel (				%	
25.Comm Base Pave				%	
26.Comm Base Grav				%	
27.Backlot				%	
28.Rear Land				%	
29.Pavement				%	

Total Acreage 0.29

Influence Codes

1.Unimproved
2.Excess Frtg
3.Topography
4.Size/Shape
5.Access
6.Restriction
7.Open Space
8.View/Environ
9.Fract Share
Acres
30.Utility R O W
31.Tillable
32.Pasture
33.Orchard
34.Softwood F&O
35.Mixed Wood F&O
36.Hardwood F&O
37.Softwood TG
38.Mixed Wood TG
39.Hardwood TG
40.Wasteland
41.Open Space
42.Mobile Home Si
43.Condo Site
44.Lot Improvemen
45.Subdivision Lo
46.Heavy Ind Sit

Washburn

Map Lot 012-056 | Account 228 | Location 22 WILDER STREET | Card 1 Of 1 | 11/19/2020

Building Style	**1 Conventional**		
1.Conv.	5.Garrison	9.Gambrel	
2.Ranch	6.Salt Box	10.Other	
3.R Ranch	7.Contemp	11.Split	
4.Cape	8.Log	12.	
Dwelling Units	**1**		
Other Units	**0**		
Stories	**2 Two Story**		
1.1	4.1.5	7.	
2.2	5.1.75	8.	
3.3	6.2.5	9.	
Exterior Walls	**1 Wood Siding**		
1.Wood	5.Stucco	9.T-111	
2.Vin/Al	6.Brick	10.Other	
3.Compos.	7.Stone	11.	
4.Asbestos	8.Concrete	12.	
Roof Surface	**3 Sheet Metal**		
1.Asphalt	4.Composit	7.	
2.Slate	5.Wood	8.	
3.Metal	6.Other	9.	
SF Masonry Trim	**0**		
OPEN-3-CUSTOM	**0**		
OPEN-4-CUSTOM	**0**		
Year Built	**1910**		
Year Remodeled	**0**		
Foundation	**1 Concrete**		
1.Concrete	4.Wood	7.	
2.C Block	5.Slab	8.	
3.Br/Stone	6.Piers	9.	
Basement	**3 3/4 Basement**		
1.1/4 Bmt	4.Full Bmt	7.	
2.1/2 Bmt	5.None	8.	
3.3/4 Bmt	6.	9.None	
Bsmt Gar # Cars	**0**		
Wet Basement	**2 Damp Basement**		
1.Dry	4.	7.	
2.Damp	5.	8.	
3.Wet	6.	9.	

SF Bsmt Living	**0**		
Fin Bsmt Grade	**0 0**		
OPEN 5 OPTIONAL	**0**		
Heat Type	**100%**	**5 Forced Warm Air**	
1.HWBB	5.FWA	9.No Heat	
2.HWCI	6.GravWA	10.	
3.H Pump	7.Electric	11.	
4.Steam	8.Fl/Wall	12.	
Cool Type	**0%**	**9 None**	
1.Refrig	4.W&C Air	7.	
2.Evapor	5.	8.	
3.H Pump	6.	9.None	
Kitchen Style	**2 Typical**		
1.Modern	4.Obsolete	7.	
2.Typical	5.	8.	
3.Old Type	6.	9.None	
Bath(s) Style	**2 Typical Bath(s)**		
1.Modern	4.Obsolete	7.	
2.Typical	5.	8.	
3.Old Type	6.	9.None	
# Rooms	**5**		
# Bedrooms	**3**		
# Full Baths	**2**		
# Half Baths	**1**		
# Addn Fixtures	**0**		
# Fireplaces	**0**		

TRIO Software
A Division of Harris Computer Systems

Layout	**1 Typical**		
1.Typical	4.	7.	
2.Inadeq	5.	8.	
3.Poor	6.	9.	
Attic	**9 None**		
1.1/4 Fin	4.Full Fin	7.	
2.1/2 Fin	5.Fl/Stair	8.	
3.3/4 Fin	6.	9.None	
Insulation	**4 Minimal**		
1.Full	4.Minimal	7.	
2.Heavy	5.Partial	8.	
3.Capped	6.	9.None	
Unfinished %	**0%**		
Grade & Factor	**2 Fair 105%**		
1.E Grade	4.B Grade	7.	
2.D Grade	5.A Grade	8.SC Grade	
3.C Grade	6.AA Grade	9.Same	
SQFT (Footprint)	**826**		
Condition	**4 Average**		
1.Poor	4.Avg	7.V G	
2.Fair	5.Avg+	8.Exc	
3.Avg-	6.Good	9.Same	
Phys. % Good	**0%**		
Funct. % Good	**100%**		
Functional Code	**9 None**		
1.Incomp	4.Delap	7.No Power	
2.O-Built	5.Bsmt	8.LongTerm	
3.Damage	6.Common	9.None	
Econ. % Good	**100%**		
Economic Code	**None**		
0.None	3.No Power	7.	
1.Location	4.Generate	8.	
2.Encroach	9.None	9.	
Entrance Code	**1 Interior Inspect**		
1.Interior	4.Vacant	7.	
2.Refusal	5.Estimate	8.	
3.Informed	6.Reviewed	9.	
Information Code	**1 Owner**		
1.Owner	4.Agent	7.	
2.Relative	5.Estimate	8.	
3.Tenant	6.Other	9.	

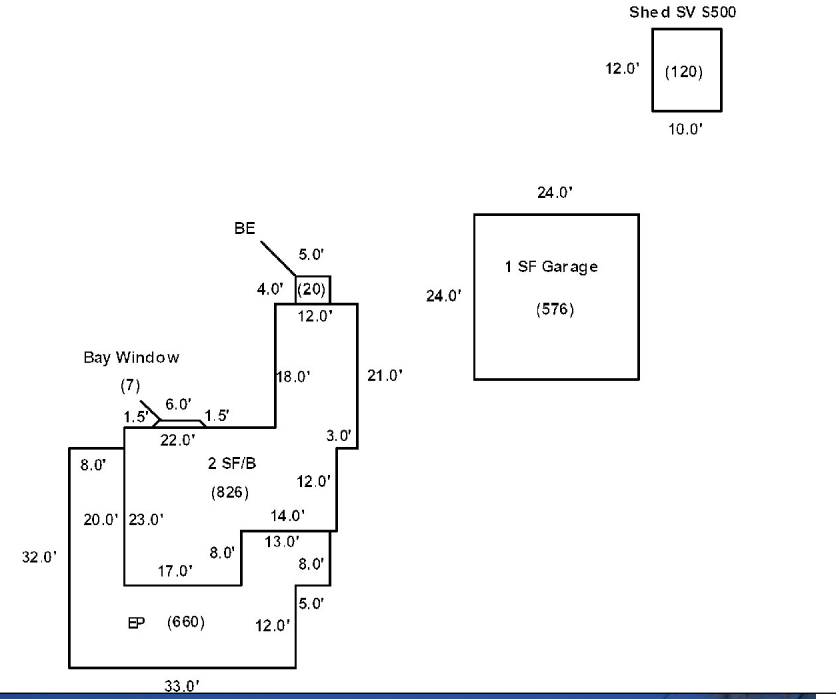

Date Inspected 11/12/2018

Additions, Outbuildings & Improvements

Type	Year	Units	Grade	Cond	Phys.	Funct.	Sound Value
22 Encl Frame Porch	1910	660	2 110	4	0 %	100 %	
25 Frame Bay	1910	7	9 100	9	0 %	100 %	
40 Basement Entry	1910	20	2 110	4	0 %	100 %	
23 Frame Garage	1970	576	3 95	4	0 %	100 %	
24 Frame Shed	0				%	%	500
					%	%	
					%	%	
					%	%	
					%	%	
					%	%	

1.One Story Fram
2.Two Story Fram
3.Three Story Fr
4.1 & 1/2 Story
5.1 & 3/4 Story
6.2 & 1/2 Story
21.Open Frame Por
22.Encl Frame Por
23.Frame Garage
24.Frame Shed
25.Frame Bay Wind
26.1SFr Overhang
27.Unfin Basement
28.Unfinished Att
29.Finished Attic

Map Lot 012-057 Account 390 Location 28 Wilder Street Card 1 Of 1 11/19/2020

Drost, Abraham J.

P.O. Box 422

Washburn ME 04786
B2148P318

Property Data

Neighborhood **1 Neighborhood One**

Tree Growth Year **0**

1ST MORTGAGE **0**

2ND MORTGAGE **0**

Zone/Land Use **1 Residential**

Secondary Zone

Topography **1 Level**

1.Level	4.Below St	7.LevelBog
2.Rolling	5.Low	8.
3.Above St	6.Swampy	9.

Utilities **2 Public Water** **3 Public Sewer**

1.Public	4.Dr Well	7.Cesspool
2.Water	5.Dug Well	8.
3.Sewer	6.Septic	9.None

Street **1 Paved**

1.Paved	4.Proposed	7.
2.Semi Imp	5.R/O/W	8.
3.Gravel	6.	9.None

TG PLAN YEAR **0**

Tif District # **0**

Sale Data

Sale Date

Price

Sale Type **2 Land & Buildings**

1.Land	4.Mobile	7.C/I L&B
2.L & B	5.Other	8.
3.Building	6.C/I Land	9.

Financing **1 Conventional**

1.Convent	4.Seller	7.
2.FHA/VA	5.Private	8.
3.Assumed	6.Cash	9.Unknown

Validity **1 Arms Length Sale**

1.Valid	4.Split	7.Renovate
2.Related	5.Partial	8.Other
3.Distress	6.Exempt	9.

Verified **5 Public Record**

1.Buyer	4.Agent	7.Family
2.Seller	5.Pub Rec	8.Other
3.Lender	6.MLS	9.

Assessment Record

Year	Land	Buildings	Exempt	Total
2007	4,600	18,000	13,000	9,600
2008	4,600	18,000	13,000	9,600
2009	4,600	18,000	9,000	13,600
2012	4,600	18,000	0	22,600
2013	5,900	18,000	0	23,900
2015	5,900	18,000	0	23,900
2018	5,900	18,000	0	23,900
2019	10,100	25,300	0	35,400
2020	10,100	25,300	0	35,400

Land Data

Front Foot	Type	Effective Frontage	Effective Depth	Influence Factor	Influence Code
11.Regular Lot				%	
12.Delta Triangle				%	
13.Nabla Triangle				%	
14.Rear Land				%	
15.Class I Road				%	
				%	
				%	
Square Foot		**Square Feet**			
16.Class II Road	29	650		75 %	0
17.Municipal Rese				%	
18.Munic Sep Lago				%	
19.Gravel Pit				%	
20.Industrial Bas				%	
				%	
				%	
Fract. Acre		**Acreage/Sites**			
21.Developed Pave	21	0.29		100 %	0
22.Undev Paved (F				%	
23.Developed Grav				%	
Acres				%	
24.Undev Gravel (				%	
25.Comm Base Pave				%	
26.Comm Base Grav				%	
27.Backlot				%	
28.Rear Land				%	
29.Pavement				%	

Total Acreage 0.29

Influence Codes

1.Unimproved
2.Excess Frtg
3.Topography
4.Size/Shape
5.Access
6.Restriction
7.Open Space
8.View/Environ
9.Fract Share
Acres
30.Utility R O W
31.Tillable
32.Pasture
33.Orchard
34.Softwood F&O
35.Mixed Wood F&O
36.Hardwood F&O
37.Softwood TG
38.Mixed Wood TG
39.Hardwood TG
40.Wasteland
41.Open Space
42.Mobile Home Si
43.Condo Site
44.Lot Improvemen
45.Subdivision Lo
46.Heavy Ind Sit

Inspection Witnessed By:

X Date

No./Date	Description	Date Insp.

Notes:
*1-28-2019 -20% for delap on dwelling.

Washburn

Washburn

Map Lot 012-057 | Account 390 | Location 28 Wilder Street | Card 1 Of 1 | 11/19/2020

Building Style	**1 Conventional**		
1.Conv.	5.Garrison	9.Gambrel	
2.Ranch	6.Salt Box	10.Other	
3.R Ranch	7.Contemp	11.Split	
4.Cape	8.Log	12.	
Dwelling Units	**1**		
Other Units	**0**		
Stories	**2 Two Story**		
1.1	4.1.5	7.	
2.2	5.1.75	8.	
3.3	6.2.5	9.	
Exterior Walls	**1 Wood Siding**		
1.Wood	5.Stucco	9.T-111	
2.Vin/Al	6.Brick	10.Other	
3.Compos.	7.Stone	11.	
4.Asbestos	8.Concrete	12.	
Roof Surface	**1 Asphalt Shingles**		
1.Asphalt	4.Composit	7.	
2.Slate	5.Wood	8.	
3.Metal	6.Other	9.	
SF Masonry Trim	**0**		
OPEN-3-CUSTOM	**0**		
OPEN-4-CUSTOM	**0**		
Year Built	**1907**		
Year Remodeled	**0**		
Foundation	**6 Piers**		
1.Concrete	4.Wood	7.	
2.C Block	5.Slab	8.	
3.Br/Stone	6.Piers	9.	
Basement	**9 No Basement**		
1.1/4 Bmt	4.Full Bmt	7.	
2.1/2 Bmt	5.None	8.	
3.3/4 Bmt	6.	9.None	
Bsmt Gar # Cars	**0**		
Wet Basement	**9 No Basement**		
1.Dry	4.	7.	
2.Damp	5.	8.	
3.Wet	6.	9.	

SF Bsmt Living	**0**		
Fin Bsmt Grade	**0 0**		
OPEN 5 OPTIONAL	**0**		
Heat Type	**100%**	**5 Forced Warm Air**	
1.HWBB	5.FWA	9.No Heat	
2.HWCI	6.GravWA	10.	
3.H Pump	7.Electric	11.	
4.Steam	8.Fl/Wall	12.	
Cool Type	**0%**	**9 None**	
1.Refrig	4.W&C Air	7.	
2.Evapor	5.	8.	
3.H Pump	6.	9.None	
Kitchen Style	**2 Typical**		
1.Modern	4.Obsolete	7.	
2.Typical	5.	8.	
3.Old Type	6.	9.None	
Bath(s) Style	**2 Typical Bath(s)**		
1.Modern	4.Obsolete	7.	
2.Typical	5.	8.	
3.Old Type	6.	9.None	
# Rooms	**6**		
# Bedrooms	**3**		
# Full Baths	**1**		
# Half Baths	**0**		
# Addn Fixtures	**0**		
# Fireplaces	**0**		

TRIO Software
A Division of Harris Computer Systems

Layout	**1 Typical**		
1.Typical	4.	7.	
2.Inadeq	5.	8.	
3.Poor	6.	9.	
Attic	**9 None**		
1.1/4 Fin	4.Full Fin	7.	
2.1/2 Fin	5.Fl/Stair	8.	
3.3/4 Fin	6.	9.None	
Insulation	**4 Minimal**		
1.Full	4.Minimal	7.	
2.Heavy	5.Partial	8.	
3.Capped	6.	9.None	
Unfinished %	**0%**		
Grade & Factor	**2 Fair 105%**		
1.E Grade	4.B Grade	7.	
2.D Grade	5.A Grade	8.SC Grade	
3.C Grade	6.AA Grade	9.Same	
SQFT (Footprint)	**448**		
Condition	**3 Below Average**		
1.Poor	4.Avg	7.V G	
2.Fair	5.Avg+	8.Exc	
3.Avg-	6.Good	9.Same	
Phys. % Good	**0%**		
Funct. % Good	**80%**		
Functional Code	**4 Delapidation**		
1.Incomp	4.Delap	7.No Power	
2.O-Built	5.Bsmt	8.LongTerm	
3.Damage	6.Common	9.None	
Econ. % Good	**100%**		
Economic Code	**None**		
0.None	3.No Power	7.	
1.Location	4.Generate	8.	
2.Encroach	9.None	9.	
Entrance Code	**1 Interior Inspect**		
1.Interior	4.Vacant	7.	
2.Refusal	5.Estimate	8.	
3.Informed	6.Reviewed	9.	
Information Code	**3 Tenant**		
1.Owner	4.Agent	7.	
2.Relative	5.Estimate	8.	
3.Tenant	6.Other	9.	

Date Inspected 11/12/2018

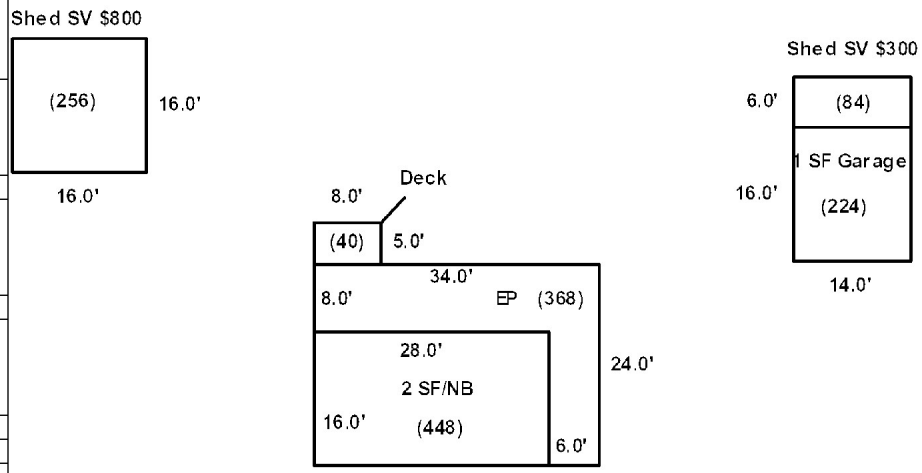

Additions, Outbuildings & Improvements

Type	Year	Units	Grade	Cond	Phys.	Funct.	Sound Value
22 Encl Frame Porch	1907	368	2 105	3	0 %	100 %	
23 Frame Garage	1907	224	3 90	4	0 %	100 %	
24 Frame Shed	0				%	%	300
24 Frame Shed	0				%	%	800
68 Wood Deck	2000	40	3 100	4	0 %	100 %	
					%	%	
					%	%	
					%	%	
					%	%	
					%	%	

1.One Story Fram
2.Two Story Fram
3.Three Story Fr
4.1 & 1/2 Story
5.1 & 3/4 Story
6.2 & 1/2 Story
21.Open Frame Por
22.Encl Frame Por
23.Frame Garage
24.Frame Shed
25.Frame Bay Wind
26.1SFr Overhang
27.Unfin Basement
28.Unfinished Att
29.Finished Attic

Map Lot 012-058 | Account 332 | Location 30 WILDER STREET | Card 1 Of 1 | 11/19/2020

ALLEN, JAMES P.
ALLEN, LORRIE, L
3 SHANNON DRIVE

BANGOR ME 04401
B5343P306 B5960P1

Previous Owner
DOAK, JANET M.
24 Park Street

Presque Isle ME 04769
Sale Date: 11/01/2019

Previous Owner
Doak, Gregory P.
P.O. Box 602

Washburn ME 04786
Sale Date: 8/19/2014

Inspection Witnessed By:

X Date

No./Date	Description	Date Insp.

Notes:
*1-28-2019 -20% for attached garage

Washburn

Property Data

Neighborhood	**1 Neighborhood One**
Tree Growth Year	**0**
1ST MORTGAGE	**0**
2ND MORTGAGE	**0**
Zone/Land Use	**1 Residential**
Secondary Zone	
Topography	**1 Level**

1.Level	4.Below St	7.LevelBog
2.Rolling	5.Low	8.
3.Above St	6.Swampy	9.

Utilities **2 Public Water** **3 Public Sewer**

1.Public	4.Dr Well	7.Cesspool
2.Water	5.Dug Well	8.
3.Sewer	6.Septic	9.None

Street **1 Paved**

1.Paved	4.Proposed	7.
2.Semi Imp	5.R/O/W	8.
3.Gravel	6.	9.None

TG PLAN YEAR	**0**
Tif District #	**0**

Sale Data

Sale Date	**11/01/2019**
Price	**92,500**
Sale Type	**2 Land & Buildings**

1.Land	4.Mobile	7.C/I L&B
2.L & B	5.Other	8.
3.Building	6.C/I Land	9.

Financing **1 Conventional**

1.Convent	4.Seller	7.
2.FHA/VA	5.Private	8.
3.Assumed	6.Cash	9.Unknown

Validity **1 Arms Length Sale**

1.Valid	4.Split	7.Renovate
2.Related	5.Partial	8.Other
3.Distress	6.Exempt	9.

Verified **5 Public Record**

1.Buyer	4.Agent	7.Family
2.Seller	5.Pub Rec	8.Other
3.Lender	6.MLS	9.

Assessment Record

Year	Land	Buildings	Exempt	Total
2007	4,600	81,700	13,000	73,300
2008	4,600	81,700	13,000	73,300
2009	4,600	81,700	9,000	77,300
2012	4,600	81,700	8,800	77,500
2013	5,900	81,700	8,800	78,800
2015	5,900	81,700	9,000	78,600
2018	5,900	81,700	18,400	69,200
2019	10,300	74,600	0	84,900
2020	10,300	74,500	0	84,800

Land Data

Front Foot	Type	Effective Frontage	Effective Depth	Influence Factor	Influence Code
11.Regular Lot				%	
12.Delta Triangle				%	
13.Nabla Triangle				%	
14.Rear Land				%	
15.Class I Road				%	
				%	
				%	
Square Foot		**Square Feet**			
16.Class II Road	29	750		75 %	0
17.Municipal Rese				%	
18.Munic Sep Lago				%	
19.Gravel Pit				%	
20.Industrial Bas				%	
				%	
				%	
Fract. Acre		**Acreage/Sites**			
21.Developed Pave	21	0.29		100 %	0
22.Undev Paved (F				%	
23.Developed Grav				%	
Acres				%	
24.Undev Gravel (				%	
25.Comm Base Pave				%	
26.Comm Base Grav				%	
27.Backlot				%	
28.Rear Land				%	
29.Pavement				%	

Total Acreage 0.29

Influence Codes

1.Unimproved
2.Excess Frtg
3.Topography
4.Size/Shape
5.Access
6.Restriction
7.Open Space
8.View/Environ
9.Fract Share
Acres
30.Utility R O W
31.Tillable
32.Pasture
33.Orchard
34.Softwood F&O
35.Mixed Wood F&O
36.Hardwood F&O
37.Softwood TG
38.Mixed Wood TG
39.Hardwood TG
40.Wasteland
41.Open Space
42.Mobile Home Si
43.Condo Site
44.Lot Improvemen
45.Subdivision Lo
46.Heavy Ind Sit

Washburn

Map Lot 012-058 | Account 332 | Location 30 WILDER STREET | Card 1 Of 1 | 11/19/2020

Building Style	**1 Conventional**		
1.Conv.	5.Garrison	9.Gambrel	
2.Ranch	6.Salt Box	10.Other	
3.R Ranch	7.Contemp	11.Split	
4.Cape	8.Log	12.	
Dwelling Units	**1**		
Other Units	**0**		
Stories	**2 Two Story**		
1.1	4.1.5	7.	
2.2	5.1.75	8.	
3.3	6.2.5	9.	
Exterior Walls	**2 Vinyl/Aluminum**		
1.Wood	5.Stucco	9.T-111	
2.Vin/Al	6.Brick	10.Other	
3.Compos.	7.Stone	11.	
4.Asbestos	8.Concrete	12.	
Roof Surface	**1 Asphalt Shingles**		
1.Asphalt	4.Composit	7.	
2.Slate	5.Wood	8.	
3.Metal	6.Other	9.	
SF Masonry Trim	**0**		
OPEN-3-CUSTOM	**0**		
OPEN-4-CUSTOM	**0**		
Year Built	**1926**		
Year Remodeled	**0**		
Foundation	**1 Concrete**		
1.Concrete	4.Wood	7.	
2.C Block	5.Slab	8.	
3.Br/Stone	6.Piers	9.	
Basement	**4 Full Basement**		
1.1/4 Bmt	4.Full Bmt	7.	
2.1/2 Bmt	5.None	8.	
3.3/4 Bmt	6.	9.None	
Bsmt Gar # Cars	**0**		
Wet Basement	**2 Damp Basement**		
1.Dry	4.	7.	
2.Damp	5.	8.	
3.Wet	6.	9.	

SF Bsmt Living	**0**		
Fin Bsmt Grade	**0 0**		
OPEN 5 OPTIONAL	**0**		
Heat Type	**100%**	**1 Hot Water BB**	
1.HWBB	5.FWA	9.No Heat	
2.HWCI	6.GravWA	10.	
3.H Pump	7.Electric	11.	
4.Steam	8.Fl/Wall	12.	
Cool Type	**0%**	**9 None**	
1.Refrig	4.W&C Air	7.	
2.Evapor	5.	8.	
3.H Pump	6.	9.None	
Kitchen Style	**2 Typical**		
1.Modern	4.Obsolete	7.	
2.Typical	5.	8.	
3.Old Type	6.	9.None	
Bath(s) Style	**2 Typical Bath(s)**		
1.Modern	4.Obsolete	7.	
2.Typical	5.	8.	
3.Old Type	6.	9.None	
# Rooms	**8**		
# Bedrooms	**3**		
# Full Baths	**2**		
# Half Baths	**1**		
# Addn Fixtures	**0**		
# Fireplaces	**0**		

TRIO Software
A Division of Harris Computer Systems

Layout	**1 Typical**		
1.Typical	4.	7.	
2.Inadeq	5.	8.	
3.Poor	6.	9.	
Attic	**9 None**		
1.1/4 Fin	4.Full Fin	7.	
2.1/2 Fin	5.Fl/Stair	8.	
3.3/4 Fin	6.	9.None	
Insulation	**1 Full**		
1.Full	4.Minimal	7.	
2.Heavy	5.Partial	8.	
3.Capped	6.	9.None	
Unfinished %	**0%**		
Grade & Factor	**3 Average 95%**		
1.E Grade	4.B Grade	7.	
2.D Grade	5.A Grade	8.SC Grade	
3.C Grade	6.AA Grade	9.Same	
SQFT (Footprint)	**928**		
Condition	**6 Good**		
1.Poor	4.Avg	7.V G	
2.Fair	5.Avg+	8.Exc	
3.Avg-	6.Good	9.Same	
Phys. % Good	**0%**		
Funct. % Good	**100%**		
Functional Code	**9 None**		
1.Incomp	4.Delap	7.No Power	
2.O-Built	5.Bsmt	8.LongTerm	
3.Damage	6.Common	9.None	
Econ. % Good	**100%**		
Economic Code	**None**		
0.None	3.No Power	7.	
1.Location	4.Generate	8.	
2.Encroach	9.None	9.	
Entrance Code	**1 Interior Inspect**		
1.Interior	4.Vacant	7.	
2.Refusal	5.Estimate	8.	
3.Informed	6.Reviewed	9.	
Information Code	**1 Owner**		
1.Owner	4.Agent	7.	
2.Relative	5.Estimate	8.	
3.Tenant	6.Other	9.	

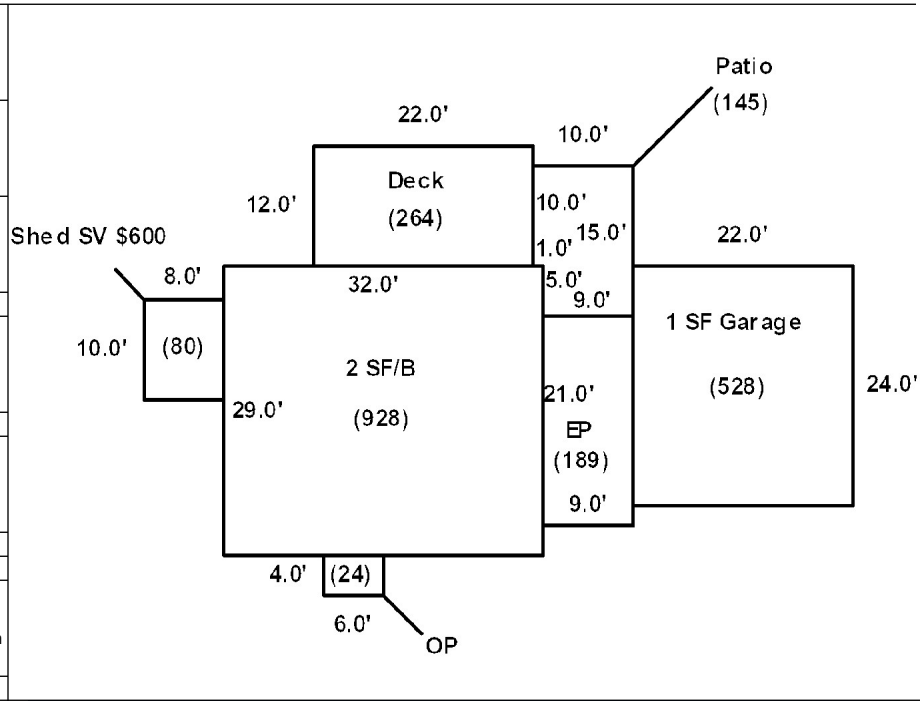

Date Inspected 11/12/2018

Additions, Outbuildings & Improvements

Type	Year	Units	Grade	Cond	Phys.	Funct.	Sound Value
21 Open Frame	1980	24	3 100	5	0 %	100 %	
22 Encl Frame Porch	1940	189	3 100	6	0 %	100 %	
68 Wood Deck	2000	264	3 100	4	0 %	100 %	
62 Patio	2000	145	3 100	4	0 %	100 %	
24 Frame Shed	0				%	%	600
23 Frame Garage	1940	528	3 95	5	0 %	80 %	
					%	%	
					%	%	
					%	%	
					%	%	

1.One Story Fram
2.Two Story Fram
3.Three Story Fr
4.1 & 1/2 Story
5.1 & 3/4 Story
6.2 & 1/2 Story
21.Open Frame Por
22.Encl Frame Por
23.Frame Garage
24.Frame Shed
25.Frame Bay Wind
26.1SFr Overhang
27.Unfin Basement
28.Unfinished Att
29.Finished Attic

Map Lot 012-059 Account 643 Location 34 WILDER STREET Card 1 Of 1 11/19/2020

RICHARDSON, PENELOPE L.

P.O. BOX 101

WASHBURN ME 04786
B1590P313

Property Data

Neighborhood **1 Neighborhood One**

Tree Growth Year **0**

1ST MORTGAGE **0**

2ND MORTGAGE **0**

Zone/Land Use **1 Residential**

Secondary Zone

Topography **1 Level**

1.Level	4.Below St	7.LevelBog
2.Rolling	5.Low	8.
3.Above St	6.Swampy	9.

Utilities **2 Public Water** **3 Public Sewer**

1.Public	4.Dr Well	7.Cesspool
2.Water	5.Dug Well	8.
3.Sewer	6.Septic	9.None

Street **1 Paved**

1.Paved	4.Proposed	7.
2.Semi Imp	5.R/O/W	8.
3.Gravel	6.	9.None

TG PLAN YEAR **0**

Tif District # **0**

Sale Data

Sale Date **5/17/1982**

Price

Sale Type **2 Land & Buildings**

1.Land	4.Mobile	7.C/I L&B
2.L & B	5.Other	8.
3.Building	6.C/I Land	9.

Financing

1.Convent	4.Seller	7.
2.FHA/VA	5.Private	8.
3.Assumed	6.Cash	9.Unknown

Validity **1 Arms Length Sale**

1.Valid	4.Split	7.Renovate
2.Related	5.Partial	8.Other
3.Distress	6.Exempt	9.

Verified **5 Public Record**

1.Buyer	4.Agent	7.Family
2.Seller	5.Pub Rec	8.Other
3.Lender	6.MLS	9.

Assessment Record

Year	Land	Buildings	Exempt	Total
2007	4,600	57,800	13,000	49,400
2008	4,600	57,800	13,000	49,400
2009	4,600	57,800	9,000	53,400
2012	4,600	57,800	8,800	53,600
2013	5,900	57,800	8,800	54,900
2015	5,900	57,800	9,000	54,700
2018	5,900	57,800	18,400	45,300
2019	10,000	60,300	20,000	50,300
2020	10,000	60,300	25,000	45,300

Land Data

Front Foot	Type	Effective Frontage	Effective Depth	Influence Factor	Influence Code
11.Regular Lot				%	
12.Delta Triangle				%	
13.Nabla Triangle				%	
14.Rear Land				%	
15.Class I Road				%	
				%	
				%	
Square Foot		**Square Feet**			
16.Class II Road	29	600		75 %	0
17.Municipal Rese				%	
18.Munic Sep Lago				%	
19.Gravel Pit				%	
20.Industrial Bas				%	
				%	
				%	
Fract. Acre		**Acreage/Sites**			
21.Developed Pave	21	0.29		100 %	0
22.Undev Paved (F				%	
23.Developed Grav				%	
Acres				%	
24.Undev Gravel (				%	
25.Comm Base Pave				%	
26.Comm Base Grav				%	
27.Backlot				%	
28.Rear Land				%	
29.Pavement				%	

Total Acreage 0.29

Influence Codes

1.Unimproved
2.Excess Frtg
3.Topography
4.Size/Shape
5.Access
6.Restriction
7.Open Space
8.View/Environ
9.Fract Share

Acres

30.Utility R O W
31.Tillable
32.Pasture
33.Orchard
34.Softwood F&O
35.Mixed Wood F&O
36.Hardwood F&O
37.Softwood TG
38.Mixed Wood TG
39.Hardwood TG
40.Wasteland
41.Open Space
42.Mobile Home Si
43.Condo Site
44.Lot Improvemen
45.Subdivision Lo
46.Heavy Ind Sit

Inspection Witnessed By:

X Date

No./Date	Description	Date Insp.

Notes:
*5-10-2019 -10% for attached shed.

Washburn

Washburn

Map Lot 012-059 | Account 643 | Location 34 WILDER STREET | Card 1 Of 1 | 11/19/2020

Building Style	**1 Conventional**		
1.Conv.	5.Garrison	9.Gambrel	
2.Ranch	6.Salt Box	10.Other	
3.R Ranch	7.Contemp	11.Split	
4.Cape	8.Log	12.	
Dwelling Units	**1**		
Other Units	**0**		
Stories	**2 Two Story**		
1.1	4.1.5	7.	
2.2	5.1.75	8.	
3.3	6.2.5	9.	
Exterior Walls	**4 Asbestos Siding**		
1.Wood	5.Stucco	9.T-111	
2.Vin/Al	6.Brick	10.Other	
3.Compos.	7.Stone	11.	
4.Asbestos	8.Concrete	12.	
Roof Surface	**1 Asphalt Shingles**		
1.Asphalt	4.Composit	7.	
2.Slate	5.Wood	8.	
3.Metal	6.Other	9.	
SF Masonry Trim	**0**		
OPEN-3-CUSTOM	**0**		
OPEN-4-CUSTOM	**0**		
Year Built	**1920**		
Year Remodeled	**0**		
Foundation	**1 Concrete**		
1.Concrete	4.Wood	7.	
2.C Block	5.Slab	8.	
3.Br/Stone	6.Piers	9.	
Basement	**4 Full Basement**		
1.1/4 Bmt	4.Full Bmt	7.	
2.1/2 Bmt	5.None	8.	
3.3/4 Bmt	6.	9.None	
Bsmt Gar # Cars	**0**		
Wet Basement	**2 Damp Basement**		
1.Dry	4.	7.	
2.Damp	5.	8.	
3.Wet	6.	9.	

SF Bsmt Living	**0**		
Fin Bsmt Grade	**0 0**		
OPEN 5 OPTIONAL	**0**		
Heat Type	**100%**	**5 Forced Warm Air**	
1.HWBB	5.FWA	9.No Heat	
2.HWCI	6.GravWA	10.	
3.H Pump	7.Electric	11.	
4.Steam	8.Fl/Wall	12.	
Cool Type	**0%**	**9 None**	
1.Refrig	4.W&C Air	7.	
2.Evapor	5.	8.	
3.H Pump	6.	9.None	
Kitchen Style	**2 Typical**		
1.Modern	4.Obsolete	7.	
2.Typical	5.	8.	
3.Old Type	6.	9.None	
Bath(s) Style	**2 Typical Bath(s)**		
1.Modern	4.Obsolete	7.	
2.Typical	5.	8.	
3.Old Type	6.	9.None	
# Rooms	**5**		
# Bedrooms	**2**		
# Full Baths	**2**		
# Half Baths	**0**		
# Addn Fixtures	**0**		
# Fireplaces	**0**		

TRIO Software
A Division of Harris Computer Systems

Layout	**1 Typical**		
1.Typical	4.	7.	
2.Inadeq	5.	8.	
3.Poor	6.	9.	
Attic	**9 None**		
1.1/4 Fin	4.Full Fin	7.	
2.1/2 Fin	5.Fl/Stair	8.	
3.3/4 Fin	6.	9.None	
Insulation	**1 Full**		
1.Full	4.Minimal	7.	
2.Heavy	5.Partial	8.	
3.Capped	6.	9.None	
Unfinished %	**0%**		
Grade & Factor	**2 Fair 110%**		
1.E Grade	4.B Grade	7.	
2.D Grade	5.A Grade	8.SC Grade	
3.C Grade	6.AA Grade	9.Same	
SQFT (Footprint)	**744**		
Condition	**5 Above Average**		
1.Poor	4.Avg	7.V G	
2.Fair	5.Avg+	8.Exc	
3.Avg-	6.Good	9.Same	
Phys. % Good	**0%**		
Funct. % Good	**100%**		
Functional Code	**9 None**		
1.Incomp	4.Delap	7.No Power	
2.O-Built	5.Bsmt	8.LongTerm	
3.Damage	6.Common	9.None	
Econ. % Good	**100%**		
Economic Code	**None**		
0.None	3.No Power	7.	
1.Location	4.Generate	8.	
2.Encroach	9.None	9.	
Entrance Code	**1 Interior Inspect**		
1.Interior	4.Vacant	7.	
2.Refusal	5.Estimate	8.	
3.Informed	6.Reviewed	9.	
Information Code	**1 Owner**		
1.Owner	4.Agent	7.	
2.Relative	5.Estimate	8.	
3.Tenant	6.Other	9.	

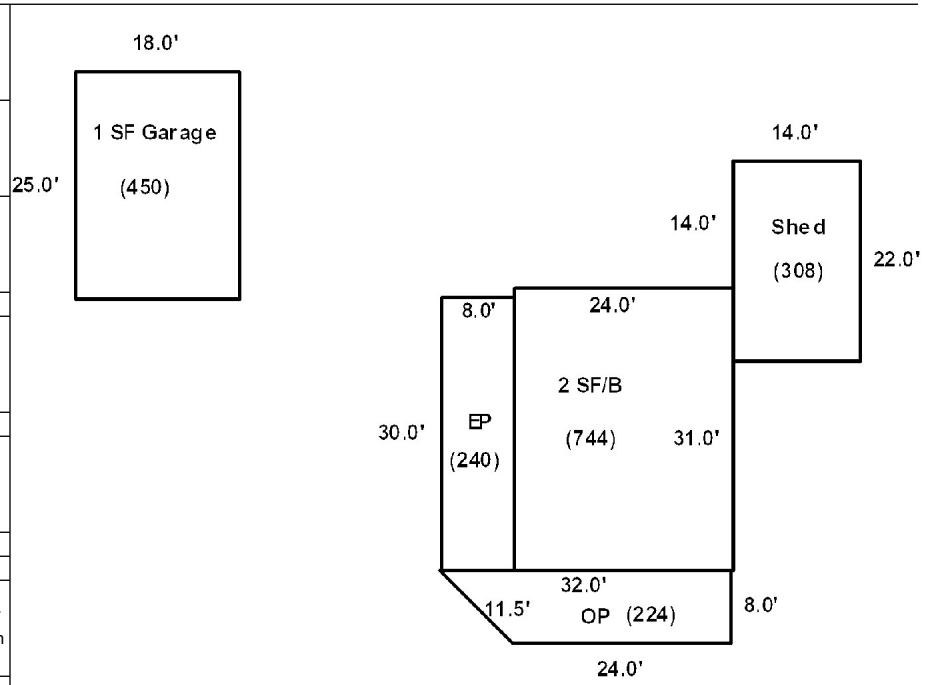

Date Inspected 11/12/2018

Additions, Outbuildings & Improvements

Type	Year	Units	Grade	Cond	Phys.	Funct.	Sound Value
21 Open Frame	1920	224	3 100	5	0 %	100 %	
24 Frame Shed	1950	308	3 95	4	0 %	90 %	
22 Encl Frame Porch	1920	240	3 95	5	0 %	100 %	
23 Frame Garage	1940	450	3 95	4	0 %	100 %	
					%	%	
					%	%	
					%	%	
					%	%	
					%	%	
					%	%	

1.One Story Fram
2.Two Story Fram
3.Three Story Fr
4.1 & 1/2 Story
5.1 & 3/4 Story
6.2 & 1/2 Story
21.Open Frame Por
22.Encl Frame Por
23.Frame Garage
24.Frame Shed
25.Frame Bay Wind
26.1SFr Overhang
27.Unfin Basement
28.Unfinished Att
29.Finished Attic

Map Lot 012-060 Account 930 Location Wilder Street Card 1 Of 1 11/19/2020

Town of Washburn

1287 Main Street

Washburn ME

Property Data

Neighborhood **1 Neighborhood One**

Tree Growth Year **0**

1ST MORTGAGE **0**

2ND MORTGAGE **0**

Zone/Land Use **1 Residential**

Secondary Zone

Topography **1 Level**

1.Level	4.Below St	7.LevelBog
2.Rolling	5.Low	8.
3.Above St	6.Swampy	9.

Utilities

1.Public	4.Dr Well	7.Cesspool
2.Water	5.Dug Well	8.
3.Sewer	6.Septic	9.None

Street **1 Paved**

1.Paved	4.Proposed	7.
2.Semi Imp	5.R/O/W	8.
3.Gravel	6.	9.None

TG PLAN YEAR **0**

Tif District # **0**

Sale Data

Sale Date

Price

Sale Type

1.Land	4.Mobile	7.C/I L&B
2.L & B	5.Other	8.
3.Building	6.C/I Land	9.

Financing

1.Convent	4.Seller	7.
2.FHA/VA	5.Private	8.
3.Assumed	6.Cash	9.Unknown

Validity

1.Valid	4.Split	7.Renovate
2.Related	5.Partial	8.Other
3.Distress	6.Exempt	9.

Verified

1.Buyer	4.Agent	7.Family
2.Seller	5.Pub Rec	8.Other
3.Lender	6.MLS	9.

Assessment Record

Year	Land	Buildings	Exempt	Total
2007	900	0	900	0
2008	900	0	900	0
2009	900	0	900	0
2012	900	0	900	0
2013	1,200	0	1,200	0
2015	1,200	0	1,200	0
2018	1,200	0	1,200	0
2019	2,200	0	2,200	0
2020	2,200	0	2,200	0

Land Data

Front Foot	Type	Effective Frontage	Effective Depth	Influence Factor	Influence Code
11.Regular Lot				%	
12.Delta Triangle				%	
13.Nabla Triangle				%	
14.Rear Land				%	
15.Class I Road				%	
				%	
				%	
Square Foot		**Square Feet**			
16.Class II Road				%	
17.Municipal Rese				%	
18.Munic Sep Lago				%	
19.Gravel Pit				%	
20.Industrial Bas				%	
				%	
				%	
Fract. Acre		**Acreage/Sites**			
21.Developed Pave	22	0.06		100 %	0
22.Undev Paved (F				%	
23.Developed Grav				%	
Acres				%	
24.Undev Gravel (				%	
25.Comm Base Pave				%	
26.Comm Base Grav				%	
27.Backlot				%	
28.Rear Land					
29.Pavement		**Total Acreage**	0.06		

Influence Codes

1.Unimproved
2.Excess Frtg
3.Topography
4.Size/Shape
5.Access
6.Restriction
7.Open Space
8.View/Environ
9.Fract Share
Acres
30.Utility R O W
31.Tillable
32.Pasture
33.Orchard
34.Softwood F&O
35.Mixed Wood F&O
36.Hardwood F&O
37.Softwood TG
38.Mixed Wood TG
39.Hardwood TG
40.Wasteland
41.Open Space
42.Mobile Home Si
43.Condo Site
44.Lot Improvemen
45.Subdivision Lo
46.Heavy Ind Sit

Inspection Witnessed By:

X Date

No./Date	Description	Date Insp.

Notes:

Washburn

Washburn

Map Lot 012-060 | Account 930 | Location Wilder Street | Card 1 Of 1 | 11/19/2020

Building Style **0**		
1.Conv.	5.Garrison	9.Gambrel
2.Ranch	6.Salt Box	10.Other
3.R Ranch	7.Contemp	11.Split
4.Cape	8.Log	12.
Dwelling Units **0**		
Other Units **0**		
Stories **0**		
1.1	4.1.5	7.
2.2	5.1.75	8.
3.3	6.2.5	9.
Exterior Walls **0**		
1.Wood	5.Stucco	9.T-111
2.Vin/Al	6.Brick	10.Other
3.Compos.	7.Stone	11.
4.Asbestos	8.Concrete	12.
Roof Surface **0**		
1.Asphalt	4.Composit	7.
2.Slate	5.Wood	8.
3.Metal	6.Other	9.
SF Masonry Trim **0**		
OPEN-3-CUSTOM **0**		
OPEN-4-CUSTOM **0**		
Year Built **0**		
Year Remodeled **0**		
Foundation **0**		
1.Concrete	4.Wood	7.
2.C Block	5.Slab	8.
3.Br/Stone	6.Piers	9.
Basement **0**		
1.1/4 Bmt	4.Full Bmt	7.
2.1/2 Bmt	5.None	8.
3.3/4 Bmt	6.	9.None
Bsmt Gar # Cars **0**		
Wet Basement **0**		
1.Dry	4.	7.
2.Damp	5.	8.
3.Wet	6.	9.

SF Bsmt Living **0**		
Fin Bsmt Grade **0 0**		
OPEN 5 OPTIONAL **0**		
Heat Type **100%** **0**		
1.HWBB	5.FWA	9.No Heat
2.HWCI	6.GravWA	10.
3.H Pump	7.Electric	11.
4.Steam	8.Fl/Wall	12.
Cool Type **0%** **9 None**		
1.Refrig	4.W&C Air	7.
2.Evapor	5.	8.
3.H Pump	6.	9.None
Kitchen Style **0**		
1.Modern	4.Obsolete	7.
2.Typical	5.	8.
3.Old Type	6.	9.None
Bath(s) Style **0**		
1.Modern	4.Obsolete	7.
2.Typical	5.	8.
3.Old Type	6.	9.None
# Rooms **0**		
# Bedrooms **0**		
# Full Baths **0**		
# Half Baths **0**		
# Addn Fixtures **0**		
# Fireplaces **0**		

TRIO Software
A Division of Harris Computer Systems

Layout **0**		
1.Typical	4.	7.
2.Inadeq	5.	8.
3.Poor	6.	9.
Attic **0**		
1.1/4 Fin	4.Full Fin	7.
2.1/2 Fin	5.Fl/Stair	8.
3.3/4 Fin	6.	9.None
Insulation **0**		
1.Full	4.Minimal	7.
2.Heavy	5.Partial	8.
3.Capped	6.	9.None
Unfinished % **0%**		
Grade & Factor **0 0%**		
1.E Grade	4.B Grade	7.
2.D Grade	5.A Grade	8.SC Grade
3.C Grade	6.AA Grade	9.Same
SQFT (Footprint) **0**		
Condition **0**		
1.Poor	4.Avg	7.V G
2.Fair	5.Avg+	8.Exc
3.Avg-	6.Good	9.Same
Phys. % Good **0%**		
Funct. % Good **100%**		
Functional Code **9 None**		
1.Incomp	4.Delap	7.No Power
2.O-Built	5.Bsmt	8.LongTerm
3.Damage	6.Common	9.None
Econ. % Good **100%**		
Economic Code **None**		
0.None	3.No Power	7.
1.Location	4.Generate	8.
2.Encroach	9.None	9.
Entrance Code **0**		
1.Interior	4.Vacant	7.
2.Refusal	5.Estimate	8.
3.Informed	6.Reviewed	9.
Information Code **0**		
1.Owner	4.Agent	7.
2.Relative	5.Estimate	8.
3.Tenant	6.Other	9.

Date Inspected

Additions, Outbuildings & Improvements

Type	Year	Units	Grade	Cond	Phys.	Funct.	Sound Value
					%	%	
					%	%	
					%	%	
					%	%	
					%	%	
					%	%	
					%	%	
					%	%	
					%	%	
					%	%	

1.One Story Fram
2.Two Story Fram
3.Three Story Fr
4.1 & 1/2 Story
5.1 & 3/4 Story
6.2 & 1/2 Story
21.Open Frame Por
22.Encl Frame Por
23.Frame Garage
24.Frame Shed
25.Frame Bay Wind
26.1SFr Overhang
27.Unfin Basement
28.Unfinished Att
29.Finished Attic

Map Lot 012-061 | Account 1044 | Location 40 WILDER STREET | Card 1 Of 1 | 11/19/2020

CLAPPER, RONNIE
CLAPPER, KAREN L.
P.O. BOX 467

WASHBURN ME 04786
B5438P125

Previous Owner
WOOLLARD, TERRY W.
P.O. BOX 440

WASHBURN ME 04786
Sale Date: 6/22/2015

Inspection Witnessed By:

X Date

No./Date	Description	Date Insp.

Notes:
*5-10-2019 -10% for attached shed.

Washburn

Property Data

Neighborhood **1 Neighborhood One**

Tree Growth Year **0**

1ST MORTGAGE **0**

2ND MORTGAGE **0**

Zone/Land Use **1 Residential**

Secondary Zone

Topography **1 Level**

1.Level	4.Below St	7.LevelBog
2.Rolling	5.Low	8.
3.Above St	6.Swampy	9.

Utilities **2 Public Water** **3 Public Sewer**

1.Public	4.Dr Well	7.Cesspool
2.Water	5.Dug Well	8.
3.Sewer	6.Septic	9.None

Street **1 Paved**

1.Paved	4.Proposed	7.
2.Semi Imp	5.R/O/W	8.
3.Gravel	6.	9.None

TG PLAN YEAR **0**

Tif District # **0**

Sale Data

Sale Date **6/22/2015**

Price **60,000**

Sale Type **2 Land & Buildings**

1.Land	4.Mobile	7.C/I L&B
2.L & B	5.Other	8.
3.Building	6.C/I Land	9.

Financing **1 Conventional**

1.Convent	4.Seller	7.
2.FHA/VA	5.Private	8.
3.Assumed	6.Cash	9.Unknown

Validity **1 Arms Length Sale**

1.Valid	4.Split	7.Renovate
2.Related	5.Partial	8.Other
3.Distress	6.Exempt	9.

Verified **5 Public Record**

1.Buyer	4.Agent	7.Family
2.Seller	5.Pub Rec	8.Other
3.Lender	6.MLS	9.

Assessment Record

Year	Land	Buildings	Exempt	Total
2007	5,500	44,500	13,000	37,000
2008	5,500	44,500	13,000	37,000
2009	5,500	44,500	9,000	41,000
2012	5,500	44,500	8,800	41,200
2013	7,100	44,500	8,800	42,800
2015	7,100	44,500	0	51,600
2018	7,100	44,500	23,920	27,680
2019	10,400	60,200	26,000	44,600
2020	10,400	60,100	31,000	39,500

Land Data

Front Foot	Type	Effective Frontage	Effective Depth	Influence Factor	Influence Code
11.Regular Lot				%	
12.Delta Triangle				%	
13.Nabla Triangle				%	
14.Rear Land				%	
15.Class I Road				%	
				%	
				%	
Square Foot		**Square Feet**			
16.Class II Road				%	
17.Municipal Rese				%	
18.Munic Sep Lago				%	
19.Gravel Pit				%	
20.Industrial Bas				%	
				%	
				%	
Fract. Acre		**Acreage/Sites**			
21.Developed Pave	21	0.40		100 %	0
22.Undev Paved (F				%	
23.Developed Grav				%	
Acres				%	
24.Undev Gravel (				%	
25.Comm Base Pave				%	
26.Comm Base Grav				%	
27.Backlot				%	
28.Rear Land				%	
29.Pavement				%	

Total Acreage 0.40

Influence Codes

1.Unimproved
2.Excess Frtg
3.Topography
4.Size/Shape
5.Access
6.Restriction
7.Open Space
8.View/Environ
9.Fract Share
Acres
30.Utility R O W
31.Tillable
32.Pasture
33.Orchard
34.Softwood F&O
35.Mixed Wood F&O
36.Hardwood F&O
37.Softwood TG
38.Mixed Wood TG
39.Hardwood TG
40.Wasteland
41.Open Space
42.Mobile Home Si
43.Condo Site
44.Lot Improvemen
45.Subdivision Lo
46.Heavy Ind Sit

Washburn

Map Lot 012-061 | Account 1044 | Location 40 WILDER STREET | Card 1 Of 1 | 11/19/2020

Building Style	**2 Ranch**		
1.Conv.	5.Garrison	9.Gambrel	
2.Ranch	6.Salt Box	10.Other	
3.R Ranch	7.Contemp	11.Split	
4.Cape	8.Log	12.	
Dwelling Units	**1**		
Other Units	**0**		
Stories	**1 One Story**		
1.1	4.1.5	7.	
2.2	5.1.75	8.	
3.3	6.2.5	9.	
Exterior Walls	**1 Wood Siding**		
1.Wood	5.Stucco	9.T-111	
2.Vin/Al	6.Brick	10.Other	
3.Compos.	7.Stone	11.	
4.Asbestos	8.Concrete	12.	
Roof Surface	**1 Asphalt Shingles**		
1.Asphalt	4.Composit	7.	
2.Slate	5.Wood	8.	
3.Metal	6.Other	9.	
SF Masonry Trim	**0**		
OPEN-3-CUSTOM	**0**		
OPEN-4-CUSTOM	**0**		
Year Built	**1970**		
Year Remodeled	**0**		
Foundation	**1 Concrete**		
1.Concrete	4.Wood	7.	
2.C Block	5.Slab	8.	
3.Br/Stone	6.Piers	9.	
Basement	**4 Full Basement**		
1.1/4 Bmt	4.Full Bmt	7.	
2.1/2 Bmt	5.None	8.	
3.3/4 Bmt	6.	9.None	
Bsmt Gar # Cars	**0**		
Wet Basement	**2 Damp Basement**		
1.Dry	4.	7.	
2.Damp	5.	8.	
3.Wet	6.	9.	

SF Bsmt Living	**0**		
Fin Bsmt Grade	**0 0**		
OPEN 5 OPTIONAL	**0**		
Heat Type	**100%**	**1 Hot Water BB**	
1.HWBB	5.FWA	9.No Heat	
2.HWCI	6.GravWA	10.	
3.H Pump	7.Electric	11.	
4.Steam	8.Fl/Wall	12.	
Cool Type	**0%**	**9 None**	
1.Refrig	4.W&C Air	7.	
2.Evapor	5.	8.	
3.H Pump	6.	9.None	
Kitchen Style	**2 Typical**		
1.Modern	4.Obsolete	7.	
2.Typical	5.	8.	
3.Old Type	6.	9.None	
Bath(s) Style	**2 Typical Bath(s)**		
1.Modern	4.Obsolete	7.	
2.Typical	5.	8.	
3.Old Type	6.	9.None	
# Rooms	**4**		
# Bedrooms	**2**		
# Full Baths	**1**		
# Half Baths	**0**		
# Addn Fixtures	**0**		
# Fireplaces	**0**		

TRIO Software
A Division of Harris Computer Systems

Layout	**1 Typical**		
1.Typical	4.	7.	
2.Inadeq	5.	8.	
3.Poor	6.	9.	
Attic	**9 None**		
1.1/4 Fin	4.Full Fin	7.	
2.1/2 Fin	5.Fl/Stair	8.	
3.3/4 Fin	6.	9.None	
Insulation	**4 Minimal**		
1.Full	4.Minimal	7.	
2.Heavy	5.Partial	8.	
3.Capped	6.	9.None	
Unfinished %	**0%**		
Grade & Factor	**3 Average 105%**		
1.E Grade	4.B Grade	7.	
2.D Grade	5.A Grade	8.SC Grade	
3.C Grade	6.AA Grade	9.Same	
SQFT (Footprint)	**1008**		
Condition	**6 Good**		
1.Poor	4.Avg	7.V G	
2.Fair	5.Avg+	8.Exc	
3.Avg-	6.Good	9.Same	
Phys. % Good	**0%**		
Funct. % Good	**100%**		
Functional Code	**9 None**		
1.Incomp	4.Delap	7.No Power	
2.O-Built	5.Bsmt	8.LongTerm	
3.Damage	6.Common	9.None	
Econ. % Good	**100%**		
Economic Code	**None**		
0.None	3.No Power	7.	
1.Location	4.Generate	8.	
2.Encroach	9.None	9.	
Entrance Code	**1 Interior Inspect**		
1.Interior	4.Vacant	7.	
2.Refusal	5.Estimate	8.	
3.Informed	6.Reviewed	9.	
Information Code	**1 Owner**		
1.Owner	4.Agent	7.	
2.Relative	5.Estimate	8.	
3.Tenant	6.Other	9.	

Date Inspected 11/12/2018

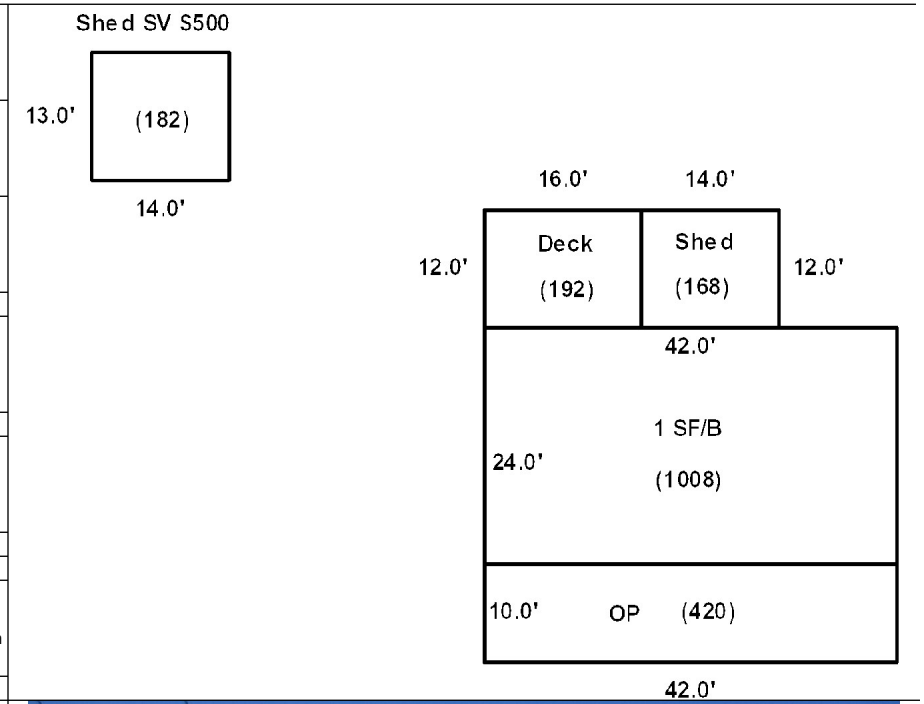

Additions, Outbuildings & Improvements

Type	Year	Units	Grade	Cond	Phys.	Funct.	Sound Value
21 Open Frame	2000	420	3 100	4	0 %	100 %	
68 Wood Deck	2000	192	3 100	4	0 %	100 %	
24 Frame Shed	2000	168	2 110	4	0 %	90 %	
24 Frame Shed	0				%	%	500
					%	%	
					%	%	
					%	%	
					%	%	
					%	%	
					%	%	

1.One Story Fram
2.Two Story Fram
3.Three Story Fr
4.1 & 1/2 Story
5.1 & 3/4 Story
6.2 & 1/2 Story
21.Open Frame Por
22.Encl Frame Por
23.Frame Garage
24.Frame Shed
25.Frame Bay Wind
26.1SFr Overhang
27.Unfin Basement
28.Unfinished Att
29.Finished Attic

Map Lot 012-062 Account 910 Location 44 WILDER STREET Card 1 Of 1 11/19/2020

THOMPSON, GREGORY L.
THOMPSON, MELISSA W.
P.O. BOX 444

WASHBURN ME 04786
B3303P328 B5181P128

Property Data

Neighborhood **1 Neighborhood One**

Tree Growth Year **0**

1ST MORTGAGE **0**

2ND MORTGAGE **0**

Zone/Land Use **1 Residential**

Secondary Zone

Topography **1 Level**

1.Level	4.Below St	7.LevelBog
2.Rolling	5.Low	8.
3.Above St	6.Swampy	9.

Utilities **2 Public Water** **3 Public Sewer**

1.Public	4.Dr Well	7.Cesspool
2.Water	5.Dug Well	8.
3.Sewer	6.Septic	9.None

Street **1 Paved**

1.Paved	4.Proposed	7.
2.Semi Imp	5.R/O/W	8.
3.Gravel	6.	9.None

TG PLAN YEAR **0**

Tif District # **0**

Sale Data

Sale Date **7/29/1999**

Price

Sale Type **2 Land & Buildings**

1.Land	4.Mobile	7.C/I L&B
2.L & B	5.Other	8.
3.Building	6.C/I Land	9.

Financing **1 Conventional**

1.Convent	4.Seller	7.
2.FHA/VA	5.Private	8.
3.Assumed	6.Cash	9.Unknown

Validity **1 Arms Length Sale**

1.Valid	4.Split	7.Renovate
2.Related	5.Partial	8.Other
3.Distress	6.Exempt	9.

Verified **5 Public Record**

1.Buyer	4.Agent	7.Family
2.Seller	5.Pub Rec	8.Other
3.Lender	6.MLS	9.

Assessment Record

Year	Land	Buildings	Exempt	Total
2007	5,500	83,800	13,000	76,300
2008	5,500	83,800	13,000	76,300
2009	5,500	83,800	9,000	80,300
2012	5,500	83,800	8,800	80,500
2013	7,100	83,800	8,800	82,100
2015	7,100	83,800	9,000	81,900
2018	7,100	83,800	18,400	72,500
2019	11,700	84,200	20,000	75,900
2020	11,700	83,300	25,000	70,000

Land Data

Front Foot	Type	Effective Frontage	Effective Depth	Influence Factor	Influence Code
11.Regular Lot				%	
12.Delta Triangle				%	
13.Nabla Triangle				%	
14.Rear Land				%	
15.Class I Road				%	
				%	
				%	
Square Foot		**Square Feet**			
16.Class II Road	29	650		75 %	0
17.Municipal Rese				%	
18.Munic Sep Lago				%	
19.Gravel Pit				%	
20.Industrial Bas				%	
				%	
				%	
Fract. Acre		**Acreage/Sites**			
21.Developed Pave	21	0.40		100 %	0
22.Undev Paved (F				%	
23.Developed Grav				%	
Acres				%	
24.Undev Gravel (				%	
25.Comm Base Pave				%	
26.Comm Base Grav				%	
27.Backlot				%	
28.Rear Land				%	
29.Pavement				%	

Total Acreage 0.40

Influence Codes

1.Unimproved
2.Excess Frtg
3.Topography
4.Size/Shape
5.Access
6.Restriction
7.Open Space
8.View/Environ
9.Fract Share
Acres
30.Utility R O W
31.Tillable
32.Pasture
33.Orchard
34.Softwood F&O
35.Mixed Wood F&O
36.Hardwood F&O
37.Softwood TG
38.Mixed Wood TG
39.Hardwood TG
40.Wasteland
41.Open Space
42.Mobile Home Si
43.Condo Site
44.Lot Improvemen
45.Subdivision Lo
46.Heavy Ind Sit

Inspection Witnessed By:

X Date

No./Date	Description	Date Insp.

Notes:
*1-28-2019 -20% for attached garage.

Washburn

Washburn

Map Lot 012-062 | Account 910 | Location 44 WILDER STREET | Card 1 Of 1 | 11/19/2020

Building Style	**2 Ranch**		
1.Conv.	5.Garrison	9.Gambrel	
2.Ranch	6.Salt Box	10.Other	
3.R Ranch	7.Contemp	11.Split	
4.Cape	8.Log	12.	
Dwelling Units	**1**		
Other Units	**0**		
Stories	**1 One Story**		
1.1	4.1.5	7.	
2.2	5.1.75	8.	
3.3	6.2.5	9.	
Exterior Walls	**2 Vinyl/Aluminum**		
1.Wood	5.Stucco	9.T-111	
2.Vin/Al	6.Brick	10.Other	
3.Compos.	7.Stone	11.	
4.Asbestos	8.Concrete	12.	
Roof Surface	**3 Sheet Metal**		
1.Asphalt	4.Composit	7.	
2.Slate	5.Wood	8.	
3.Metal	6.Other	9.	
SF Masonry Trim	**64**		
OPEN-3-CUSTOM	**0**		
OPEN-4-CUSTOM	**0**		
Year Built	**1970**		
Year Remodeled	**0**		
Foundation	**1 Concrete**		
1.Concrete	4.Wood	7.	
2.C Block	5.Slab	8.	
3.Br/Stone	6.Piers	9.	
Basement	**4 Full Basement**		
1.1/4 Bmt	4.Full Bmt	7.	
2.1/2 Bmt	5.None	8.	
3.3/4 Bmt	6.	9.None	
Bsmt Gar # Cars	**0**		
Wet Basement	**2 Damp Basement**		
1.Dry	4.	7.	
2.Damp	5.	8.	
3.Wet	6.	9.	

SF Bsmt Living	**0**		
Fin Bsmt Grade	**0 0**		
OPEN 5 OPTIONAL	**0**		
Heat Type	**100%**	**1 Hot Water BB**	
1.HWBB	5.FWA	9.No Heat	
2.HWCI	6.GravWA	10.	
3.H Pump	7.Electric	11.	
4.Steam	8.Fl/Wall	12.	
Cool Type	**0%**	**9 None**	
1.Refrig	4.W&C Air	7.	
2.Evapor	5.	8.	
3.H Pump	6.	9.None	
Kitchen Style	**2 Typical**		
1.Modern	4.Obsolete	7.	
2.Typical	5.	8.	
3.Old Type	6.	9.None	
Bath(s) Style	**2 Typical Bath(s)**		
1.Modern	4.Obsolete	7.	
2.Typical	5.	8.	
3.Old Type	6.	9.None	
# Rooms	**7**		
# Bedrooms	**5**		
# Full Baths	**2**		
# Half Baths	**0**		
# Addn Fixtures	**0**		
# Fireplaces	**0**		

TRIO Software
A Division of Harris Computer Systems

Layout	**1 Typical**		
1.Typical	4.	7.	
2.Inadeq	5.	8.	
3.Poor	6.	9.	
Attic	**9 None**		
1.1/4 Fin	4.Full Fin	7.	
2.1/2 Fin	5.Fl/Stair	8.	
3.3/4 Fin	6.	9.None	
Insulation	**1 Full**		
1.Full	4.Minimal	7.	
2.Heavy	5.Partial	8.	
3.Capped	6.	9.None	
Unfinished %	**0%**		
Grade & Factor	**3 Average 105%**		
1.E Grade	4.B Grade	7.	
2.D Grade	5.A Grade	8.SC Grade	
3.C Grade	6.AA Grade	9.Same	
SQFT (Footprint)	**1292**		
Condition	**5 Above Average**		
1.Poor	4.Avg	7.V G	
2.Fair	5.Avg+	8.Exc	
3.Avg-	6.Good	9.Same	
Phys. % Good	**0%**		
Funct. % Good	**100%**		
Functional Code	**9 None**		
1.Incomp	4.Delap	7.No Power	
2.O-Built	5.Bsmt	8.LongTerm	
3.Damage	6.Common	9.None	
Econ. % Good	**100%**		
Economic Code	**None**		
0.None	3.No Power	7.	
1.Location	4.Generate	8.	
2.Encroach	9.None	9.	
Entrance Code	**5 Estimated**		
1.Interior	4.Vacant	7.	
2.Refusal	5.Estimate	8.	
3.Informed	6.Reviewed	9.	
Information Code	**5 Estimate**		
1.Owner	4.Agent	7.	
2.Relative	5.Estimate	8.	
3.Tenant	6.Other	9.	

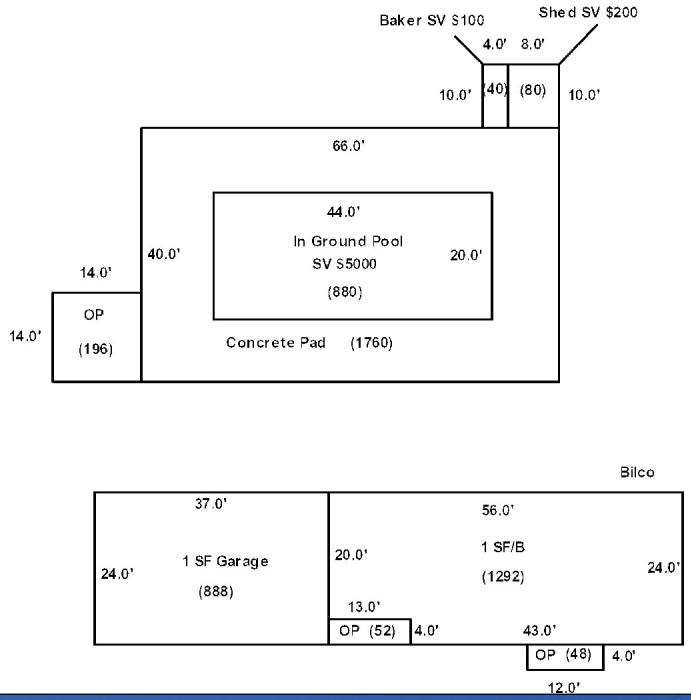

Date Inspected 11/12/2018

Additions, Outbuildings & Improvements

Type	Year	Units	Grade	Cond	Phys.	Funct.	Sound Value
21 Open Frame	1970	52	3 100	4	0 %	100 %	
21 Open Frame	2000	48	3 95	4	0 %	100 %	
23 Frame Garage	1970	888	3 100	5	0 %	80 %	
48 Concrete Slab	1990	1760	3 100	4	0 %	100 %	
21 Open Frame	1990	196	3 100	4	0 %	100 %	
24 Frame Shed	0				%	%	200
58 Baker	0				%	%	100
63 Swimming Pool	0				%	%	5,000
					%	%	
					%	%	

1.One Story Fram
2.Two Story Fram
3.Three Story Fr
4.1 & 1/2 Story
5.1 & 3/4 Story
6.2 & 1/2 Story
21.Open Frame Por
22.Encl Frame Por
23.Frame Garage
24.Frame Shed
25.Frame Bay Wind
26.1SFr Overhang
27.Unfin Basement
28.Unfinished Att
29.Finished Attic

Map Lot 012-063 Account 420 Location 43 Wilder Street Card 1 Of 1 11/19/2020

Skinner, John J.
Skinner, Liza A.
P.O. Box 386

Washburn ME 04786
B4553P160 B4553P162

Property Data

Neighborhood	**1 Neighborhood One**
Tree Growth Year	**0**
1ST MORTGAGE	**0**
2ND MORTGAGE	**0**
Zone/Land Use	**1 Residential**
Secondary Zone	
Topography	**1 Level**

1.Level	4.Below St	7.LevelBog
2.Rolling	5.Low	8.
3.Above St	6.Swampy	9.

Utilities **2 Public Water** **3 Public Sewer**

1.Public	4.Dr Well	7.Cesspool
2.Water	5.Dug Well	8.
3.Sewer	6.Septic	9.None

Street **1 Paved**

1.Paved	4.Proposed	7.
2.Semi Imp	5.R/O/W	8.
3.Gravel	6.	9.None

TG PLAN YEAR	**0**
Tif District #	**0**

Sale Data

Sale Date	**3/12/2008**
Price	**93,800**
Sale Type	**2 Land & Buildings**

1.Land	4.Mobile	7.C/I L&B
2.L & B	5.Other	8.
3.Building	6.C/I Land	9.

Financing **1 Conventional**

1.Convent	4.Seller	7.
2.FHA/VA	5.Private	8.
3.Assumed	6.Cash	9.Unknown

Validity **1 Arms Length Sale**

1.Valid	4.Split	7.Renovate
2.Related	5.Partial	8.Other
3.Distress	6.Exempt	9.

Verified **5 Public Record**

1.Buyer	4.Agent	7.Family
2.Seller	5.Pub Rec	8.Other
3.Lender	6.MLS	9.

Assessment Record

Year	Land	Buildings	Exempt	Total
2007	5,500	67,200	13,000	59,700
2008	5,500	67,200	13,000	59,700
2009	5,500	67,200	9,000	63,700
2012	5,500	67,200	8,800	63,900
2013	7,200	67,200	8,800	65,600
2015	7,200	67,200	9,000	65,400
2018	7,200	67,200	18,400	56,000
2019	12,800	70,800	26,000	57,600
2020	12,800	70,000	31,000	51,800

Land Data

Front Foot	Type	Effective Frontage	Effective Depth	Influence Factor	Influence Code
11.Regular Lot				%	
12.Delta Triangle				%	
13.Nabla Triangle				%	
14.Rear Land				%	
15.Class I Road				%	
				%	
				%	
Square Foot		**Square Feet**			
16.Class II Road	29	1,100		75 %	0
17.Municipal Rese				%	
18.Munic Sep Lago				%	
19.Gravel Pit				%	
20.Industrial Bas				%	
				%	
				%	
Fract. Acre		**Acreage/Sites**			
21.Developed Pave	21	0.42		100 %	0
22.Undev Paved (F				%	
23.Developed Grav				%	
Acres				%	
24.Undev Gravel (				%	
25.Comm Base Pave				%	
26.Comm Base Grav				%	
27.Backlot				%	
28.Rear Land				%	
29.Pavement				%	

Total Acreage 0.42

Influence Codes

1.Unimproved
2.Excess Frtg
3.Topography
4.Size/Shape
5.Access
6.Restriction
7.Open Space
8.View/Environ
9.Fract Share

Acres

30.Utility R O W
31.Tillable
32.Pasture
33.Orchard
34.Softwood F&O
35.Mixed Wood F&O
36.Hardwood F&O
37.Softwood TG
38.Mixed Wood TG
39.Hardwood TG
40.Wasteland
41.Open Space
42.Mobile Home Si
43.Condo Site
44.Lot Improvemen
45.Subdivision Lo
46.Heavy Ind Sit

Inspection Witnessed By:

X Date

No./Date	Description	Date Insp.

Notes:
*1-28-2019 -15% for attached garage.

Washburn

Washburn

Map Lot 012-063 | Account 420 | Location 43 Wilder Street | Card 1 Of 1 | 11/19/2020

Building Style	**2 Ranch**	
1.Conv.	5.Garrison	9.Gambrel
2.Ranch	6.Salt Box	10.Other
3.R Ranch	7.Contemp	11.Split
4.Cape	8.Log	12.
Dwelling Units	**1**	
Other Units	**0**	
Stories	**1 One Story**	
1.1	4.1.5	7.
2.2	5.1.75	8.
3.3	6.2.5	9.
Exterior Walls	**9 T-111**	
1.Wood	5.Stucco	9.T-111
2.Vin/Al	6.Brick	10.Other
3.Compos.	7.Stone	11.
4.Asbestos	8.Concrete	12.
Roof Surface	**1 Asphalt Shingles**	
1.Asphalt	4.Composit	7.
2.Slate	5.Wood	8.
3.Metal	6.Other	9.
SF Masonry Trim	**0**	
OPEN-3-CUSTOM	**0**	
OPEN-4-CUSTOM	**0**	
Year Built	**1970**	
Year Remodeled	**0**	
Foundation	**1 Concrete**	
1.Concrete	4.Wood	7.
2.C Block	5.Slab	8.
3.Br/Stone	6.Piers	9.
Basement	**4 Full Basement**	
1.1/4 Bmt	4.Full Bmt	7.
2.1/2 Bmt	5.None	8.
3.3/4 Bmt	6.	9.None
Bsmt Gar # Cars	**0**	
Wet Basement	**2 Damp Basement**	
1.Dry	4.	7.
2.Damp	5.	8.
3.Wet	6.	9.

SF Bsmt Living	**0**	
Fin Bsmt Grade	**0 0**	
OPEN 5 OPTIONAL	**0**	
Heat Type	**100%**	**1 Hot Water BB**
1.HWBB	5.FWA	9.No Heat
2.HWCI	6.GravWA	10.
3.H Pump	7.Electric	11.
4.Steam	8.Fl/Wall	12.
Cool Type	**50%**	**3 Heat Pump**
1.Refrig	4.W&C Air	7.
2.Evapor	5.	8.
3.H Pump	6.	9.None
Kitchen Style	**2 Typical**	
1.Modern	4.Obsolete	7.
2.Typical	5.	8.
3.Old Type	6.	9.None
Bath(s) Style	**2 Typical Bath(s)**	
1.Modern	4.Obsolete	7.
2.Typical	5.	8.
3.Old Type	6.	9.None
# Rooms	**5**	
# Bedrooms	**3**	
# Full Baths	**1**	
# Half Baths	**0**	
# Addn Fixtures	**0**	
# Fireplaces	**0**	

TRIO Software
A Division of Harris Computer Systems

Layout	**1 Typical**	
1.Typical	4.	7.
2.Inadeq	5.	8.
3.Poor	6.	9.
Attic	**9 None**	
1.1/4 Fin	4.Full Fin	7.
2.1/2 Fin	5.Fl/Stair	8.
3.3/4 Fin	6.	9.None
Insulation	**1 Full**	
1.Full	4.Minimal	7.
2.Heavy	5.Partial	8.
3.Capped	6.	9.None
Unfinished %	**0%**	
Grade & Factor	**3 Average 105%**	
1.E Grade	4.B Grade	7.
2.D Grade	5.A Grade	8.SC Grade
3.C Grade	6.AA Grade	9.Same
SQFT (Footprint)	**1008**	
Condition	**5 Above Average**	
1.Poor	4.Avg	7.V G
2.Fair	5.Avg+	8.Exc
3.Avg-	6.Good	9.Same
Phys. % Good	**0%**	
Funct. % Good	**100%**	
Functional Code	**9 None**	
1.Incomp	4.Delap	7.No Power
2.O-Built	5.Bsmt	8.LongTerm
3.Damage	6.Common	9.None
Econ. % Good	**100%**	
Economic Code	**None**	
0.None	3.No Power	7.
1.Location	4.Generate	8.
2.Encroach	9.None	9.
Entrance Code	**3 Information Only**	
1.Interior	4.Vacant	7.
2.Refusal	5.Estimate	8.
3.Informed	6.Reviewed	9.
Information Code	**1 Owner**	
1.Owner	4.Agent	7.
2.Relative	5.Estimate	8.
3.Tenant	6.Other	9.

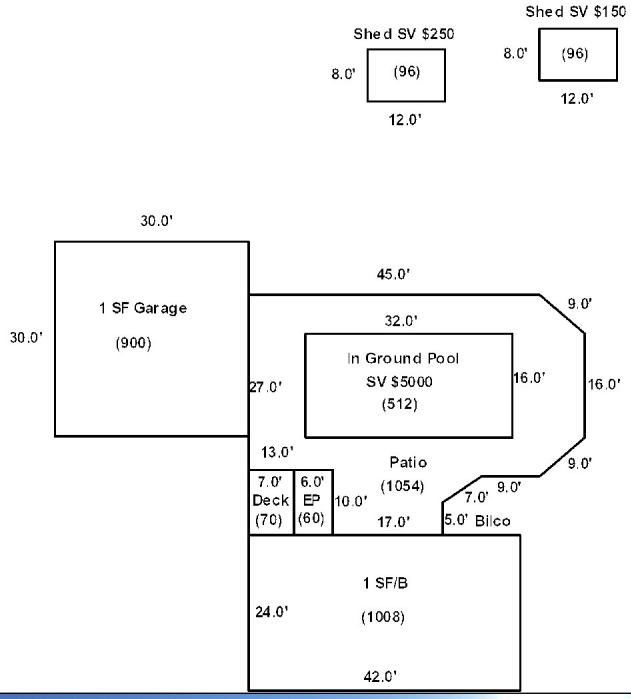

Date Inspected 11/12/2018

Additions, Outbuildings & Improvements

Type	Year	Units	Grade	Cond	Phys.	Funct.	Sound Value
62 Patio	1990	1054	3 100	4	0 %	100 %	
63 Swimming Pool	0				%	%	5,000
22 Encl Frame Porch	1970	60	3 100	4	0 %	100 %	
68 Wood Deck	1980	70	3 100	4	0 %	100 %	
23 Frame Garage	1970	900	3 95	4	0 %	85 %	
24 Frame Shed	0				%	%	150
24 Frame Shed	0				%	%	250
					%	%	
					%	%	
					%	%	

1.One Story Fram
2.Two Story Fram
3.Three Story Fr
4.1 & 1/2 Story
5.1 & 3/4 Story
6.2 & 1/2 Story
21.Open Frame Por
22.Encl Frame Por
23.Frame Garage
24.Frame Shed
25.Frame Bay Wind
26.1SFr Overhang
27.Unfin Basement
28.Unfinished Att
29.Finished Attic

Map Lot 012-064 Account 341 Location 69 PORTER STREET Card 1 Of 1 11/19/2020

DOMINIQUE, KENNETH
CONLEY, VICKY A.
DOMINIQUE, DANNY S. / MARK K.
P.O. BOX 448
WASHBURN ME 04786
B4772P282

Property Data

Neighborhood **1 Neighborhood One**

Tree Growth Year **0**

1ST MORTGAGE **0**

2ND MORTGAGE **0**

Zone/Land Use **1 Residential**

Secondary Zone

Topography **1 Level**

1.Level	4.Below St	7.LevelBog
2.Rolling	5.Low	8.
3.Above St	6.Swampy	9.

Utilities **2 Public Water** **3 Public Sewer**

1.Public	4.Dr Well	7.Cesspool
2.Water	5.Dug Well	8.
3.Sewer	6.Septic	9.None

Street **1 Paved**

1.Paved	4.Proposed	7.
2.Semi Imp	5.R/O/W	8.
3.Gravel	6.	9.None

TG PLAN YEAR **0**

Tif District # **0**

Sale Data

Sale Date **11/19/2009**

Price

Sale Type **2 Land & Buildings**

1.Land	4.Mobile	7.C/I L&B
2.L & B	5.Other	8.
3.Building	6.C/I Land	9.

Financing

1.Convent	4.Seller	7.
2.FHA/VA	5.Private	8.
3.Assumed	6.Cash	9.Unknown

Validity **2 Related Parties**

1.Valid	4.Split	7.Renovate
2.Related	5.Partial	8.Other
3.Distress	6.Exempt	9.

Verified **5 Public Record**

1.Buyer	4.Agent	7.Family
2.Seller	5.Pub Rec	8.Other
3.Lender	6.MLS	9.

Assessment Record

Year	Land	Buildings	Exempt	Total
2007	5,300	57,000	13,000	49,300
2008	5,300	57,000	13,000	49,300
2009	5,300	57,000	9,000	53,300
2012	5,300	57,000	8,800	53,500
2013	6,900	57,000	8,800	55,100
2015	6,900	57,000	9,000	54,900
2018	6,900	57,000	18,400	45,500
2019	11,800	62,000	20,000	53,800
2020	11,800	61,200	25,000	48,000

Land Data

Front Foot	Type	Effective Frontage	Effective Depth	Influence Factor	Influence Code
11.Regular Lot				%	
12.Delta Triangle				%	
13.Nabla Triangle				%	
14.Rear Land				%	
15.Class I Road				%	
				%	
				%	
Square Foot		**Square Feet**			
16.Class II Road	29	800		75 %	0
17.Municipal Rese				%	
18.Munic Sep Lago				%	
19.Gravel Pit				%	
20.Industrial Bas				%	
				%	
				%	
Fract. Acre		**Acreage/Sites**			
21.Developed Pave	21	0.39		100 %	0
22.Undev Paved (F				%	
23.Developed Grav				%	
Acres				%	
24.Undev Gravel (				%	
25.Comm Base Pave				%	
26.Comm Base Grav				%	
27.Backlot				%	
28.Rear Land				%	
29.Pavement				%	

Total Acreage 0.39

Influence Codes

1.Unimproved
2.Excess Frtg
3.Topography
4.Size/Shape
5.Access
6.Restriction
7.Open Space
8.View/Environ
9.Fract Share
Acres
30.Utility R O W
31.Tillable
32.Pasture
33.Orchard
34.Softwood F&O
35.Mixed Wood F&O
36.Hardwood F&O
37.Softwood TG
38.Mixed Wood TG
39.Hardwood TG
40.Wasteland
41.Open Space
42.Mobile Home Si
43.Condo Site
44.Lot Improvemen
45.Subdivision Lo
46.Heavy Ind Sit

Inspection Witnessed By:

X Date

No./Date	Description	Date Insp.

Notes:
*1-28-2019 -15 % for attached garage.

Washburn

Washburn

Map Lot 012-064 | Account 341 | Location 69 PORTER STREET | Card 1 Of 1 | 11/19/2020

Building Style	**2 Ranch**		
1.Conv.	5.Garrison	9.Gambrel	
2.Ranch	6.Salt Box	10.Other	
3.R Ranch	7.Contemp	11.Split	
4.Cape	8.Log	12.	
Dwelling Units	**1**		
Other Units	**0**		
Stories	**1 One Story**		
1.1	4.1.5	7.	
2.2	5.1.75	8.	
3.3	6.2.5	9.	
Exterior Walls	**2 Vinyl/Aluminum**		
1.Wood	5.Stucco	9.T-111	
2.Vin/Al	6.Brick	10.Other	
3.Compos.	7.Stone	11.	
4.Asbestos	8.Concrete	12.	
Roof Surface	**1 Asphalt Shingles**		
1.Asphalt	4.Composit	7.	
2.Slate	5.Wood	8.	
3.Metal	6.Other	9.	
SF Masonry Trim	**0**		
OPEN-3-CUSTOM	**0**		
OPEN-4-CUSTOM	**0**		
Year Built	**1970**		
Year Remodeled	**0**		
Foundation	**1 Concrete**		
1.Concrete	4.Wood	7.	
2.C Block	5.Slab	8.	
3.Br/Stone	6.Piers	9.	
Basement	**4 Full Basement**		
1.1/4 Bmt	4.Full Bmt	7.	
2.1/2 Bmt	5.None	8.	
3.3/4 Bmt	6.	9.None	
Bsmt Gar # Cars	**0**		
Wet Basement	**2 Damp Basement**		
1.Dry	4.	7.	
2.Damp	5.	8.	
3.Wet	6.	9.	

SF Bsmt Living	**0**		
Fin Bsmt Grade	**0 0**		
OPEN 5 OPTIONAL	**0**		
Heat Type	**100%**	**1 Hot Water BB**	
1.HWBB	5.FWA	9.No Heat	
2.HWCI	6.GravWA	10.	
3.H Pump	7.Electric	11.	
4.Steam	8.Fl/Wall	12.	
Cool Type	**50%**	**3 Heat Pump**	
1.Refrig	4.W&C Air	7.	
2.Evapor	5.	8.	
3.H Pump	6.	9.None	
Kitchen Style	**2 Typical**		
1.Modern	4.Obsolete	7.	
2.Typical	5.	8.	
3.Old Type	6.	9.None	
Bath(s) Style	**2 Typical Bath(s)**		
1.Modern	4.Obsolete	7.	
2.Typical	5.	8.	
3.Old Type	6.	9.None	
# Rooms	**7**		
# Bedrooms	**5**		
# Full Baths	**2**		
# Half Baths	**0**		
# Addn Fixtures	**0**		
# Fireplaces	**0**		

TRIO Software
A Division of Harris Computer Systems

Layout	**1 Typical**		
1.Typical	4.	7.	
2.Inadeq	5.	8.	
3.Poor	6.	9.	
Attic	**9 None**		
1.1/4 Fin	4.Full Fin	7.	
2.1/2 Fin	5.Fl/Stair	8.	
3.3/4 Fin	6.	9.None	
Insulation	**1 Full**		
1.Full	4.Minimal	7.	
2.Heavy	5.Partial	8.	
3.Capped	6.	9.None	
Unfinished %	**0%**		
Grade & Factor	**3 Average 100%**		
1.E Grade	4.B Grade	7.	
2.D Grade	5.A Grade	8.SC Grade	
3.C Grade	6.AA Grade	9.Same	
SQFT (Footprint)	**1137**		
Condition	**5 Above Average**		
1.Poor	4.Avg	7.V G	
2.Fair	5.Avg+	8.Exc	
3.Avg-	6.Good	9.Same	
Phys. % Good	**0%**		
Funct. % Good	**100%**		
Functional Code	**9 None**		
1.Incomp	4.Delap	7.No Power	
2.O-Built	5.Bsmt	8.LongTerm	
3.Damage	6.Common	9.None	
Econ. % Good	**100%**		
Economic Code	**None**		
0.None	3.No Power	7.	
1.Location	4.Generate	8.	
2.Encroach	9.None	9.	
Entrance Code	**5 Estimated**		
1.Interior	4.Vacant	7.	
2.Refusal	5.Estimate	8.	
3.Informed	6.Reviewed	9.	
Information Code	**5 Estimate**		
1.Owner	4.Agent	7.	
2.Relative	5.Estimate	8.	
3.Tenant	6.Other	9.	

Date Inspected 11/12/2018

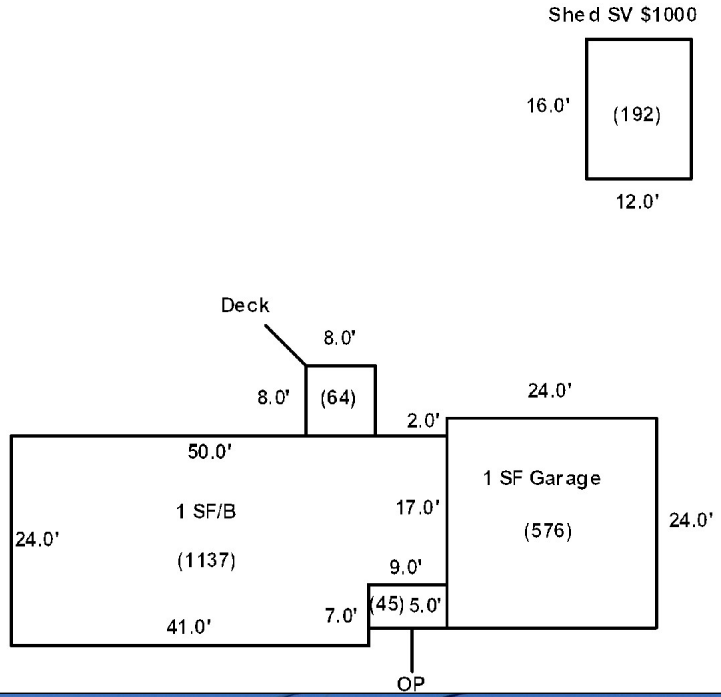

Additions, Outbuildings & Improvements

Type	Year	Units	Grade	Cond	Phys.	Funct.	Sound Value
21 Open Frame	1970	45	3 100	4	0 %	100 %	
68 Wood Deck	2000	64	3 100	4	0 %	100 %	
23 Frame Garage	1970	576	3 100	5	0 %	85 %	
24 Frame Shed	0				%	%	1,000
					%	%	
					%	%	
					%	%	
					%	%	
					%	%	
					%	%	

1.One Story Fram
2.Two Story Fram
3.Three Story Fr
4.1 & 1/2 Story
5.1 & 3/4 Story
6.2 & 1/2 Story
21.Open Frame Por
22.Encl Frame Por
23.Frame Garage
24.Frame Shed
25.Frame Bay Wind
26.1SFr Overhang
27.Unfin Basement
28.Unfinished Att
29.Finished Attic

Map Lot 012-065/66 Account 765 Location 65 PORTER STREET Card 1 Of 1 11/19/2020

MILLER, KELLIE L. (THOMAS)

P.O. BOX 412

WASHBURN ME 04786
B3407P133 B5297P71

Property Data

Neighborhood **1 Neighborhood One**

Tree Growth Year **0**

1ST MORTGAGE **0**

2ND MORTGAGE **0**

Zone/Land Use **1 Residential**

Secondary Zone

Topography **1 Level**

1.Level	4.Below St	7.LevelBog
2.Rolling	5.Low	8.
3.Above St	6.Swampy	9.

Utilities **2 Public Water** **3 Public Sewer**

1.Public	4.Dr Well	7.Cesspool
2.Water	5.Dug Well	8.
3.Sewer	6.Septic	9.None

Street **1 Paved**

1.Paved	4.Proposed	7.
2.Semi Imp	5.R/O/W	8.
3.Gravel	6.	9.None

TG PLAN YEAR **0**

Tif District # **0**

Sale Data

Sale Date **6/23/2000**

Price **61,000**

Sale Type **2 Land & Buildings**

1.Land	4.Mobile	7.C/I L&B
2.L & B	5.Other	8.
3.Building	6.C/I Land	9.

Financing **1 Conventional**

1.Convent	4.Seller	7.
2.FHA/VA	5.Private	8.
3.Assumed	6.Cash	9.Unknown

Validity **1 Arms Length Sale**

1.Valid	4.Split	7.Renovate
2.Related	5.Partial	8.Other
3.Distress	6.Exempt	9.

Verified **5 Public Record**

1.Buyer	4.Agent	7.Family
2.Seller	5.Pub Rec	8.Other
3.Lender	6.MLS	9.

Assessment Record

Year	Land	Buildings	Exempt	Total
2007	8,700	67,200	13,000	62,900
2008	8,700	67,200	13,000	62,900
2009	8,700	67,200	9,000	66,900
2012	8,700	67,200	8,800	67,100
2013	11,300	67,200	8,800	69,700
2015	11,300	67,200	9,000	69,500
2018	11,300	67,200	18,400	60,100
2019	16,800	69,100	20,000	65,900
2020	16,800	69,100	25,000	60,900

Land Data

Front Foot	Type	Effective Frontage	Effective Depth	Influence Factor	Influence Code
11.Regular Lot				%	
12.Delta Triangle				%	
13.Nabla Triangle				%	
14.Rear Land				%	
15.Class I Road				%	
				%	
				%	
Square Foot		**Square Feet**			
16.Class II Road	29	1,000		75 %	0
17.Municipal Rese				%	
18.Munic Sep Lago				%	
19.Gravel Pit				%	
20.Industrial Bas				%	
				%	
				%	
Fract. Acre		**Acreage/Sites**			
21.Developed Pave	21	0.82		100 %	0
22.Undev Paved (F				%	
23.Developed Grav				%	
Acres				%	
24.Undev Gravel (				%	
25.Comm Base Pave				%	
26.Comm Base Grav				%	
27.Backlot				%	
28.Rear Land				%	
29.Pavement				%	

Total Acreage 0.82

Influence Codes

1.Unimproved
2.Excess Frtg
3.Topography
4.Size/Shape
5.Access
6.Restriction
7.Open Space
8.View/Environ
9.Fract Share

Acres

30.Utility R O W
31.Tillable
32.Pasture
33.Orchard
34.Softwood F&O
35.Mixed Wood F&O
36.Hardwood F&O
37.Softwood TG
38.Mixed Wood TG
39.Hardwood TG
40.Wasteland
41.Open Space
42.Mobile Home Si
43.Condo Site
44.Lot Improvemen
45.Subdivision Lo
46.Heavy Ind Sit

Inspection Witnessed By:

X Date

No./Date	Description	Date Insp.

Notes:

Washburn

Washburn

Map Lot 012-065/66 | Account 765 | Location 65 PORTER STREET | Card 1 Of 1 | 11/19/2020

Building Style	**3 Raised Ranch**	
1.Conv.	5.Garrison	9.Gambrel
2.Ranch	6.Salt Box	10.Other
3.R Ranch	7.Contemp	11.Split
4.Cape	8.Log	12.
Dwelling Units	**1**	
Other Units	**0**	
Stories	**1 One Story**	
1.1	4.1.5	7.
2.2	5.1.75	8.
3.3	6.2.5	9.
Exterior Walls	**2 Vinyl/Aluminum**	
1.Wood	5.Stucco	9.T-111
2.Vin/Al	6.Brick	10.Other
3.Compos.	7.Stone	11.
4.Asbestos	8.Concrete	12.
Roof Surface	**1 Asphalt Shingles**	
1.Asphalt	4.Composit	7.
2.Slate	5.Wood	8.
3.Metal	6.Other	9.
SF Masonry Trim	**0**	
OPEN-3-CUSTOM	**0**	
OPEN-4-CUSTOM	**0**	
Year Built	**1975**	
Year Remodeled	**0**	
Foundation	**1 Concrete**	
1.Concrete	4.Wood	7.
2.C Block	5.Slab	8.
3.Br/Stone	6.Piers	9.
Basement	**4 Full Basement**	
1.1/4 Bmt	4.Full Bmt	7.
2.1/2 Bmt	5.None	8.
3.3/4 Bmt	6.	9.None
Bsmt Gar # Cars	**0**	
Wet Basement	**1 Dry Basement**	
1.Dry	4.	7.
2.Damp	5.	8.
3.Wet	6.	9.

SF Bsmt Living	**300**	
Fin Bsmt Grade	**3 100**	
OPEN 5 OPTIONAL	**0**	
Heat Type	**100%**	**1 Hot Water BB**
1.HWBB	5.FWA	9.No Heat
2.HWCI	6.GravWA	10.
3.H Pump	7.Electric	11.
4.Steam	8.Fl/Wall	12.
Cool Type	**0%**	**9 None**
1.Refrig	4.W&C Air	7.
2.Evapor	5.	8.
3.H Pump	6.	9.None
Kitchen Style	**2 Typical**	
1.Modern	4.Obsolete	7.
2.Typical	5.	8.
3.Old Type	6.	9.None
Bath(s) Style	**2 Typical Bath(s)**	
1.Modern	4.Obsolete	7.
2.Typical	5.	8.
3.Old Type	6.	9.None
# Rooms	**8**	
# Bedrooms	**4**	
# Full Baths	**2**	
# Half Baths	**0**	
# Addn Fixtures	**0**	
# Fireplaces	**0**	

TRIO Software
A Division of Harris Computer Systems

Layout	**1 Typical**	
1.Typical	4.	7.
2.Inadeq	5.	8.
3.Poor	6.	9.
Attic	**9 None**	
1.1/4 Fin	4.Full Fin	7.
2.1/2 Fin	5.Fl/Stair	8.
3.3/4 Fin	6.	9.None
Insulation	**1 Full**	
1.Full	4.Minimal	7.
2.Heavy	5.Partial	8.
3.Capped	6.	9.None
Unfinished %	**0%**	
Grade & Factor	**3 Average 105%**	
1.E Grade	4.B Grade	7.
2.D Grade	5.A Grade	8.SC Grade
3.C Grade	6.AA Grade	9.Same
SQFT (Footprint)	**924**	
Condition	**5 Above Average**	
1.Poor	4.Avg	7.V G
2.Fair	5.Avg+	8.Exc
3.Avg-	6.Good	9.Same
Phys. % Good	**0%**	
Funct. % Good	**100%**	
Functional Code	**9 None**	
1.Incomp	4.Delap	7.No Power
2.O-Built	5.Bsmt	8.LongTerm
3.Damage	6.Common	9.None
Econ. % Good	**100%**	
Economic Code	**None**	
0.None	3.No Power	7.
1.Location	4.Generate	8.
2.Encroach	9.None	9.
Entrance Code	**5 Estimated**	
1.Interior	4.Vacant	7.
2.Refusal	5.Estimate	8.
3.Informed	6.Reviewed	9.
Information Code	**5 Estimate**	
1.Owner	4.Agent	7.
2.Relative	5.Estimate	8.
3.Tenant	6.Other	9.

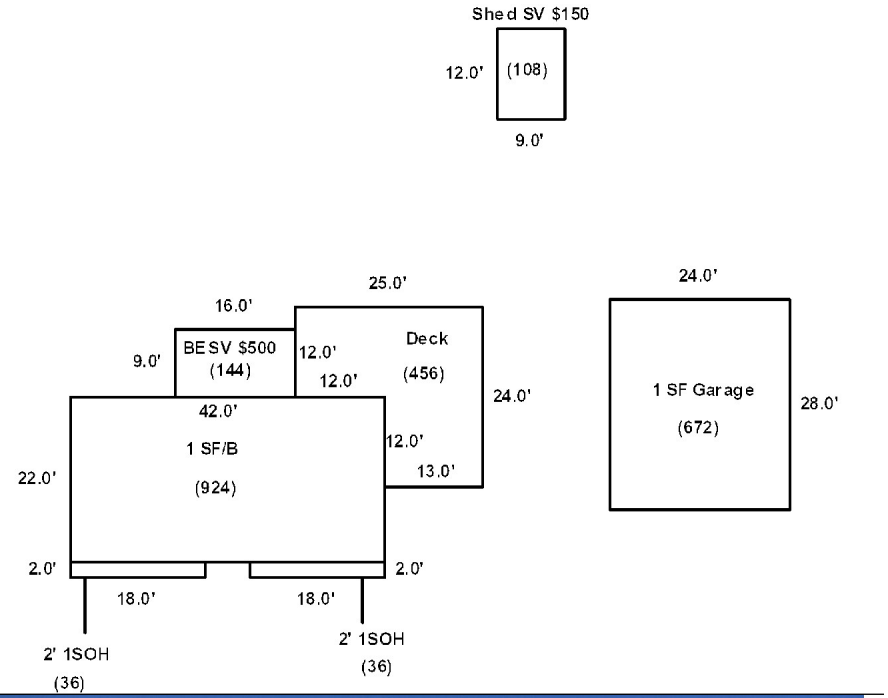

Date Inspected 11/12/2018

Additions, Outbuildings & Improvements

Type	Year	Units	Grade	Cond	Phys.	Funct.	Sound Value
26 1SFr Overhang	1975	72	9 100	9	0 %	100 %	
40 Basement Entry	0				%	%	500
68 Wood Deck	1985	456	3 100	4	0 %	100 %	
23 Frame Garage	1975	672	3 100	5	0 %	100 %	
24 Frame Shed	0				%	%	150
					%	%	
					%	%	
					%	%	
					%	%	
					%	%	

1.One Story Fram
2.Two Story Fram
3.Three Story Fr
4.1 & 1/2 Story
5.1 & 3/4 Story
6.2 & 1/2 Story
21.Open Frame Por
22.Encl Frame Por
23.Frame Garage
24.Frame Shed
25.Frame Bay Wind
26.1SFr Overhang
27.Unfin Basement
28.Unfinished Att
29.Finished Attic

Map Lot 012-067 Account 396 Location PORTER STREET Card 1 Of 1 11/19/2020

MILLER, GREGORY G.
MILLER, KELLIE L.
P.O. BOX 412

WASHBURN ME 04786
B5133P230

Previous Owner
Drost, Eugene
1405 Instrumental Avenue

Sevierville TN 37876
Sale Date: 11/27/2012

Inspection Witnessed By:

X Date

No./Date	Description	Date Insp.

Notes:

Washburn

Property Data

Neighborhood **1 Neighborhood One**

Tree Growth Year **0**

1ST MORTGAGE **0**

2ND MORTGAGE **0**

Zone/Land Use **1 Residential**

Secondary Zone

Topography **1 Level**

1.Level	4.Below St	7.LevelBog
2.Rolling	5.Low	8.
3.Above St	6.Swampy	9.

Utilities

1.Public	4.Dr Well	7.Cesspool
2.Water	5.Dug Well	8.
3.Sewer	6.Septic	9.None

Street **1 Paved**

1.Paved	4.Proposed	7.
2.Semi Imp	5.R/O/W	8.
3.Gravel	6.	9.None

TG PLAN YEAR **0**

Tif District # **0**

Sale Data

Sale Date **12/07/2012**

Price **4,500**

Sale Type **1 Land Only**

1.Land	4.Mobile	7.C/I L&B
2.L & B	5.Other	8.
3.Building	6.C/I Land	9.

Financing

1.Convent	4.Seller	7.
2.FHA/VA	5.Private	8.
3.Assumed	6.Cash	9.Unknown

Validity **1 Arms Length Sale**

1.Valid	4.Split	7.Renovate
2.Related	5.Partial	8.Other
3.Distress	6.Exempt	9.

Verified **5 Public Record**

1.Buyer	4.Agent	7.Family
2.Seller	5.Pub Rec	8.Other
3.Lender	6.MLS	9.

Assessment Record

Year	Land	Buildings	Exempt	Total
2007	5,500	0	0	5,500
2008	5,500	0	0	5,500
2009	5,500	0	0	5,500
2012	5,500	0	0	5,500
2013	7,200	0	0	7,200
2015	7,200	0	0	7,200
2018	7,200	0	0	7,200
2019	5,800	0	0	5,800
2020	5,800	0	0	5,800

Land Data

Front Foot	Type	Effective Frontage	Effective Depth	Influence Factor	Influence Code
11.Regular Lot				%	
12.Delta Triangle				%	
13.Nabla Triangle				%	
14.Rear Land				%	
15.Class I Road				%	
				%	
				%	
Square Foot		**Square Feet**			
16.Class II Road				%	
17.Municipal Rese				%	
18.Munic Sep Lago				%	
19.Gravel Pit				%	
20.Industrial Bas				%	
				%	
				%	
Fract. Acre		**Acreage/Sites**			
21.Developed Pave	22	0.41		100 %	0
22.Undev Paved (F				%	
23.Developed Grav				%	
Acres				%	
24.Undev Gravel (				%	
25.Comm Base Pave				%	
26.Comm Base Grav				%	
27.Backlot				%	
28.Rear Land				%	
29.Pavement				%	

Total Acreage 0.41

Influence Codes

1.Unimproved
2.Excess Frtg
3.Topography
4.Size/Shape
5.Access
6.Restriction
7.Open Space
8.View/Environ
9.Fract Share
Acres
30.Utility R O W
31.Tillable
32.Pasture
33.Orchard
34.Softwood F&O
35.Mixed Wood F&O
36.Hardwood F&O
37.Softwood TG
38.Mixed Wood TG
39.Hardwood TG
40.Wasteland
41.Open Space
42.Mobile Home Si
43.Condo Site
44.Lot Improvemen
45.Subdivision Lo
46.Heavy Ind Sit

Washburn

Map Lot 012-067 | Account 396 | Location PORTER STREET | Card 1 Of 1 | 11/19/2020

Building Style **0**		
1.Conv.	5.Garrison	9.Gambrel
2.Ranch	6.Salt Box	10.Other
3.R Ranch	7.Contemp	11.Split
4.Cape	8.Log	12.
Dwelling Units **0**		
Other Units **0**		
Stories **0**		
1.1	4.1.5	7.
2.2	5.1.75	8.
3.3	6.2.5	9.
Exterior Walls **0**		
1.Wood	5.Stucco	9.T-111
2.Vin/Al	6.Brick	10.Other
3.Compos.	7.Stone	11.
4.Asbestos	8.Concrete	12.
Roof Surface **0**		
1.Asphalt	4.Composit	7.
2.Slate	5.Wood	8.
3.Metal	6.Other	9.
SF Masonry Trim **0**		
OPEN-3-CUSTOM **0**		
OPEN-4-CUSTOM **0**		
Year Built **0**		
Year Remodeled **0**		
Foundation **0**		
1.Concrete	4.Wood	7.
2.C Block	5.Slab	8.
3.Br/Stone	6.Piers	9.
Basement **0**		
1.1/4 Bmt	4.Full Bmt	7.
2.1/2 Bmt	5.None	8.
3.3/4 Bmt	6.	9.None
Bsmt Gar # Cars **0**		
Wet Basement **0**		
1.Dry	4.	7.
2.Damp	5.	8.
3.Wet	6.	9.

SF Bsmt Living **0**		
Fin Bsmt Grade **0 0**		
OPEN 5 OPTIONAL **0**		
Heat Type **100%** **0**		
1.HWBB	5.FWA	9.No Heat
2.HWCI	6.GravWA	10.
3.H Pump	7.Electric	11.
4.Steam	8.Fl/Wall	12.
Cool Type **0%** **9 None**		
1.Refrig	4.W&C Air	7.
2.Evapor	5.	8.
3.H Pump	6.	9.None
Kitchen Style **0**		
1.Modern	4.Obsolete	7.
2.Typical	5.	8.
3.Old Type	6.	9.None
Bath(s) Style **0**		
1.Modern	4.Obsolete	7.
2.Typical	5.	8.
3.Old Type	6.	9.None
# Rooms **0**		
# Bedrooms **0**		
# Full Baths **0**		
# Half Baths **0**		
# Addn Fixtures **0**		
# Fireplaces **0**		

TRIO Software
A Division of Harris Computer Systems

Layout **0**		
1.Typical	4.	7.
2.Inadeq	5.	8.
3.Poor	6.	9.
Attic **0**		
1.1/4 Fin	4.Full Fin	7.
2.1/2 Fin	5.Fl/Stair	8.
3.3/4 Fin	6.	9.None
Insulation **0**		
1.Full	4.Minimal	7.
2.Heavy	5.Partial	8.
3.Capped	6.	9.None
Unfinished % **0%**		
Grade & Factor **0 0%**		
1.E Grade	4.B Grade	7.
2.D Grade	5.A Grade	8.SC Grade
3.C Grade	6.AA Grade	9.Same
SQFT (Footprint) **0**		
Condition **0**		
1.Poor	4.Avg	7.V G
2.Fair	5.Avg+	8.Exc
3.Avg-	6.Good	9.Same
Phys. % Good **0%**		
Funct. % Good **100%**		
Functional Code **9 None**		
1.Incomp	4.Delap	7.No Power
2.O-Built	5.Bsmt	8.LongTerm
3.Damage	6.Common	9.None
Econ. % Good **100%**		
Economic Code **None**		
0.None	3.No Power	7.
1.Location	4.Generate	8.
2.Encroach	9.None	9.
Entrance Code **0**		
1.Interior	4.Vacant	7.
2.Refusal	5.Estimate	8.
3.Informed	6.Reviewed	9.
Information Code **0**		
1.Owner	4.Agent	7.
2.Relative	5.Estimate	8.
3.Tenant	6.Other	9.

Date Inspected

Additions, Outbuildings & Improvements

Type	Year	Units	Grade	Cond	Phys.	Funct.	Sound Value
					%	%	
					%	%	
					%	%	
					%	%	
					%	%	
					%	%	
					%	%	
					%	%	
					%	%	
					%	%	

1.One Story Fram
2.Two Story Fram
3.Three Story Fr
4.1 & 1/2 Story
5.1 & 3/4 Story
6.2 & 1/2 Story
21.Open Frame Por
22.Encl Frame Por
23.Frame Garage
24.Frame Shed
25.Frame Bay Wind
26.1SFr Overhang
27.Unfin Basement
28.Unfinished Att
29.Finished Attic

Map Lot 012-075 Account 42 Location 21 PORTER STREET Card 1 Of 1 11/19/2020

BRAGG, RICKY T.
BRAGG, HEATHER
14 DUDLEY STREET

PRESQUE ISLE ME 04769
B2476P341 B5249P131

Property Data

Neighborhood **1 Neighborhood One**

Tree Growth Year **0**

1ST MORTGAGE **0**

2ND MORTGAGE **0**

Zone/Land Use **1 Residential**

Secondary Zone

Topography **1 Level**

1.Level	4.Below St	7.LevelBog
2.Rolling	5.Low	8.
3.Above St	6.Swampy	9.

Utilities **2 Public Water** **3 Public Sewer**

1.Public	4.Dr Well	7.Cesspool
2.Water	5.Dug Well	8.
3.Sewer	6.Septic	9.None

Street **1 Paved**

1.Paved	4.Proposed	7.
2.Semi Imp	5.R/O/W	8.
3.Gravel	6.	9.None

TG PLAN YEAR **0**

Tif District # **0**

Sale Data

Sale Date **7/01/1992**

Price **47,500**

Sale Type **2 Land & Buildings**

1.Land	4.Mobile	7.C/I L&B
2.L & B	5.Other	8.
3.Building	6.C/I Land	9.

Financing **1 Conventional**

1.Convent	4.Seller	7.
2.FHA/VA	5.Private	8.
3.Assumed	6.Cash	9.Unknown

Validity **1 Arms Length Sale**

1.Valid	4.Split	7.Renovate
2.Related	5.Partial	8.Other
3.Distress	6.Exempt	9.

Verified **5 Public Record**

1.Buyer	4.Agent	7.Family
2.Seller	5.Pub Rec	8.Other
3.Lender	6.MLS	9.

Assessment Record

Year	Land	Buildings	Exempt	Total
2007	4,900	86,200	13,000	78,100
2008	4,900	86,200	13,000	78,100
2009	4,900	86,200	9,000	82,100
2012	4,900	86,200	8,800	82,300
2013	6,400	86,200	8,800	83,800
2015	6,400	86,200	9,000	83,600
2018	6,400	86,200	18,400	74,200
2019	9,900	86,700	0	96,600
2020	9,900	86,700	0	96,600

Land Data

Front Foot	Type	Effective Frontage	Effective Depth	Influence Factor	Influence Code
11.Regular Lot				%	
12.Delta Triangle				%	
13.Nabla Triangle				%	
14.Rear Land				%	
15.Class I Road				%	
				%	
				%	
Square Foot		**Square Feet**			
16.Class II Road				%	
17.Municipal Rese				%	
18.Munic Sep Lago				%	
19.Gravel Pit				%	
20.Industrial Bas				%	
				%	
				%	
Fract. Acre		**Acreage/Sites**			
21.Developed Pave	21	0.36		100 %	0
22.Undev Paved (F				%	
23.Developed Grav				%	
Acres				%	
24.Undev Gravel (				%	
25.Comm Base Pave				%	
26.Comm Base Grav				%	
27.Backlot				%	
28.Rear Land				%	
29.Pavement				%	

Total Acreage 0.36

Influence Codes

1.Unimproved
2.Excess Frtg
3.Topography
4.Size/Shape
5.Access
6.Restriction
7.Open Space
8.View/Environ
9.Fract Share
Acres
30.Utility R O W
31.Tillable
32.Pasture
33.Orchard
34.Softwood F&O
35.Mixed Wood F&O
36.Hardwood F&O
37.Softwood TG
38.Mixed Wood TG
39.Hardwood TG
40.Wasteland
41.Open Space
42.Mobile Home Si
43.Condo Site
44.Lot Improvemen
45.Subdivision Lo
46.Heavy Ind Sit

Inspection Witnessed By:

X Date

No./Date	Description	Date Insp.

Notes:

Washburn

Washburn

Map Lot 012-075 | Account 42 | Location 21 PORTER STREET | Card 1 Of 1 | 11/19/2020

Building Style	**4 Cape Cod**		
1.Conv.	5.Garrison	9.Gambrel	
2.Ranch	6.Salt Box	10.Other	
3.R Ranch	7.Contemp	11.Split	
4.Cape	8.Log	12.	
Dwelling Units	**1**		
Other Units	**0**		
Stories	**5 One & 3/4 Story**		
1.1	4.1.5	7.	
2.2	5.1.75	8.	
3.3	6.2.5	9.	
Exterior Walls	**2 Vinyl/Aluminum**		
1.Wood	5.Stucco	9.T-111	
2.Vin/Al	6.Brick	10.Other	
3.Compos.	7.Stone	11.	
4.Asbestos	8.Concrete	12.	
Roof Surface	**1 Asphalt Shingles**		
1.Asphalt	4.Composit	7.	
2.Slate	5.Wood	8.	
3.Metal	6.Other	9.	
SF Masonry Trim	**0**		
OPEN-3-CUSTOM	**0**		
OPEN-4-CUSTOM	**0**		
Year Built	**1980**		
Year Remodeled	**0**		
Foundation	**1 Concrete**		
1.Concrete	4.Wood	7.	
2.C Block	5.Slab	8.	
3.Br/Stone	6.Piers	9.	
Basement	**4 Full Basement**		
1.1/4 Bmt	4.Full Bmt	7.	
2.1/2 Bmt	5.None	8.	
3.3/4 Bmt	6.	9.None	
Bsmt Gar # Cars	**0**		
Wet Basement	**2 Damp Basement**		
1.Dry	4.	7.	
2.Damp	5.	8.	
3.Wet	6.	9.	

SF Bsmt Living	**0**		
Fin Bsmt Grade	**0 0**		
OPEN 5 OPTIONAL	**0**		
Heat Type	**100%**	**5 Forced Warm Air**	
1.HWBB	5.FWA	9.No Heat	
2.HWCI	6.GravWA	10.	
3.H Pump	7.Electric	11.	
4.Steam	8.Fl/Wall	12.	
Cool Type	**0%**	**9 None**	
1.Refrig	4.W&C Air	7.	
2.Evapor	5.	8.	
3.H Pump	6.	9.None	
Kitchen Style	**2 Typical**		
1.Modern	4.Obsolete	7.	
2.Typical	5.	8.	
3.Old Type	6.	9.None	
Bath(s) Style	**2 Typical Bath(s)**		
1.Modern	4.Obsolete	7.	
2.Typical	5.	8.	
3.Old Type	6.	9.None	
# Rooms	**8**		
# Bedrooms	**5**		
# Full Baths	**2**		
# Half Baths	**0**		
# Addn Fixtures	**0**		
# Fireplaces	**0**		

TRIO Software
A Division of Harris Computer Systems

Layout	**1 Typical**		
1.Typical	4.	7.	
2.Inadeq	5.	8.	
3.Poor	6.	9.	
Attic	**9 None**		
1.1/4 Fin	4.Full Fin	7.	
2.1/2 Fin	5.Fl/Stair	8.	
3.3/4 Fin	6.	9.None	
Insulation	**1 Full**		
1.Full	4.Minimal	7.	
2.Heavy	5.Partial	8.	
3.Capped	6.	9.None	
Unfinished %	**0%**		
Grade & Factor	**3 Average 105%**		
1.E Grade	4.B Grade	7.	
2.D Grade	5.A Grade	8.SC Grade	
3.C Grade	6.AA Grade	9.Same	
SQFT (Footprint)	**1250**		
Condition	**5 Above Average**		
1.Poor	4.Avg	7.V G	
2.Fair	5.Avg+	8.Exc	
3.Avg-	6.Good	9.Same	
Phys. % Good	**0%**		
Funct. % Good	**100%**		
Functional Code	**9 None**		
1.Incomp	4.Delap	7.No Power	
2.O-Built	5.Bsmt	8.LongTerm	
3.Damage	6.Common	9.None	
Econ. % Good	**100%**		
Economic Code	**None**		
0.None	3.No Power	7.	
1.Location	4.Generate	8.	
2.Encroach	9.None	9.	
Entrance Code	**3 Information Only**		
1.Interior	4.Vacant	7.	
2.Refusal	5.Estimate	8.	
3.Informed	6.Reviewed	9.	
Information Code	**3 Tenant**		
1.Owner	4.Agent	7.	
2.Relative	5.Estimate	8.	
3.Tenant	6.Other	9.	

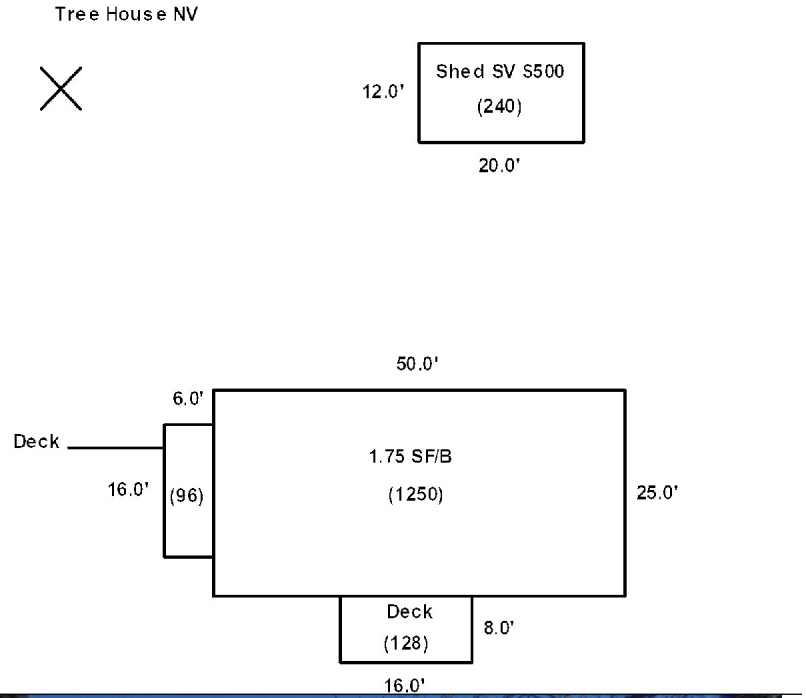

Date Inspected 11/12/2018

Additions, Outbuildings & Improvements

Type	Year	Units	Grade	Cond	Phys.	Funct.	Sound Value
68 Wood Deck	2000	128	3 100	4	0 %	100 %	
68 Wood Deck	2000	96	3 100	4	0 %	100 %	
24 Frame Shed	0				%	%	500
					%	%	
					%	%	
					%	%	
					%	%	
					%	%	
					%	%	
					%	%	

1.One Story Fram
2.Two Story Fram
3.Three Story Fr
4.1 & 1/2 Story
5.1 & 3/4 Story
6.2 & 1/2 Story
21.Open Frame Por
22.Encl Frame Por
23.Frame Garage
24.Frame Shed
25.Frame Bay Wind
26.1SFr Overhang
27.Unfin Basement
28.Unfinished Att
29.Finished Attic