Map Lot 006-001 Account 159 Location 371 CROSS ROAD Card 1 Of 1 11/18/2020

BELFORTI, ROBERTA

P.O. BOX 491

CROUSEVILLE ME 04738
B3693P24

Property Data

Neighborhood **1 Neighborhood One**

Tree Growth Year **0**

1ST MORTGAGE **0**

2ND MORTGAGE **0**

Zone/Land Use **1 Residential**

Secondary Zone

Topography **1 Level**

1.Level	4.Below St	7.LevelBog
2.Rolling	5.Low	8.
3.Above St	6.Swampy	9.

Utilities **4 Drilled Well** **6 Septic System**

1.Public	4.Dr Well	7.Cesspool
2.Water	5.Dug Well	8.
3.Sewer	6.Septic	9.None

Street **1 Paved**

1.Paved	4.Proposed	7.
2.Semi Imp	5.R/O/W	8.
3.Gravel	6.	9.None

TG PLAN YEAR **0**

Tif District # **0**

Sale Data

Sale Date **6/13/2002**

Price

Sale Type **2 Land & Buildings**

1.Land	4.Mobile	7.C/I L&B
2.L & B	5.Other	8.
3.Building	6.C/I Land	9.

Financing

1.Convent	4.Seller	7.
2.FHA/VA	5.Private	8.
3.Assumed	6.Cash	9.Unknown

Validity **2 Related Parties**

1.Valid	4.Split	7.Renovate
2.Related	5.Partial	8.Other
3.Distress	6.Exempt	9.

Verified **5 Public Record**

1.Buyer	4.Agent	7.Family
2.Seller	5.Pub Rec	8.Other
3.Lender	6.MLS	9.

Assessment Record

Year	Land	Buildings	Exempt	Total
2007	6,600	34,700	13,000	28,300
2008	6,600	27,800	13,000	21,400
2009	6,600	27,800	9,000	25,400
2012	6,600	27,800	8,800	25,600
2013	8,700	28,800	8,800	28,700
2015	8,700	28,800	9,000	28,500
2018	8,700	28,800	18,400	19,100
2019	16,600	32,900	20,000	29,500
2020	16,600	32,300	25,000	23,900

Land Data

Front Foot	Type	Effective Frontage	Effective Depth	Influence Factor	Influence Code
11.Regular Lot				%	
12.Delta Triangle				%	
13.Nabla Triangle				%	
14.Rear Land				%	
15.Class I Road				%	
				%	
				%	
Square Foot		**Square Feet**			
16.Class II Road				%	
17.Municipal Rese				%	
18.Munic Sep Lago				%	
19.Gravel Pit				%	
20.Industrial Bas				%	
				%	
				%	
Fract. Acre		**Acreage/Sites**			
21.Developed Pave	21	1.00	100	%	0
22.Undev Paved (F	28	0.25	100	%	0
23.Developed Grav				%	
Acres				%	
24.Undev Gravel (				%	
25.Comm Base Pave				%	
26.Comm Base Grav				%	
27.Backlot				%	
28.Rear Land				%	
29.Pavement				%	

Total Acreage 1.25

Influence Codes

1.Unimproved
2.Excess Frtg
3.Topography
4.Size/Shape
5.Access
6.Restriction
7.Open Space
8.View/Environ
9.Fract Share
Acres
30.Utility R O W
31.Tillable
32.Pasture
33.Orchard
34.Softwood F&O
35.Mixed Wood F&O
36.Hardwood F&O
37.Softwood TG
38.Mixed Wood TG
39.Hardwood TG
40.Wasteland
41.Open Space
42.Mobile Home Si
43.Condo Site
44.Lot Improvemen
45.Subdivision Lo
46.Heavy Ind Sit

Inspection Witnessed By:

X Date

No./Date	Description	Date Insp.

Notes:

Washburn

Washburn

Map Lot 006-001 | Account 159 | Location 371 CROSS ROAD | Card 1 Of 1 | 11/18/2020

Building Style	**2 Ranch**		
1.Conv.	5.Garrison	9.Gambrel	
2.Ranch	6.Salt Box	10.Other	
3.R Ranch	7.Contemp	11.Split	
4.Cape	8.Log	12.	
Dwelling Units	**1**		
Other Units	**0**		
Stories	**1 One Story**		
1.1	4.1.5	7.	
2.2	5.1.75	8.	
3.3	6.2.5	9.	
Exterior Walls	**2 Vinyl/Aluminum**		
1.Wood	5.Stucco	9.T-111	
2.Vin/Al	6.Brick	10.Other	
3.Compos.	7.Stone	11.	
4.Asbestos	8.Concrete	12.	
Roof Surface	**1 Asphalt Shingles**		
1.Asphalt	4.Composit	7.	
2.Slate	5.Wood	8.	
3.Metal	6.Other	9.	
SF Masonry Trim	**0**		
OPEN-3-CUSTOM	**0**		
OPEN-4-CUSTOM	**0**		
Year Built	**1960**		
Year Remodeled	**0**		
Foundation	**1 Concrete**		
1.Concrete	4.Wood	7.	
2.C Block	5.Slab	8.	
3.Br/Stone	6.Piers	9.	
Basement	**4 Full Basement**		
1.1/4 Bmt	4.Full Bmt	7.	
2.1/2 Bmt	5.None	8.	
3.3/4 Bmt	6.	9.None	
Bsmt Gar # Cars	**0**		
Wet Basement	**2 Damp Basement**		
1.Dry	4.	7.	
2.Damp	5.	8.	
3.Wet	6.	9.	

SF Bsmt Living	**0**		
Fin Bsmt Grade	**0 0**		
OPEN 5 OPTIONAL	**0**		
Heat Type	**100%**	**1 Hot Water BB**	
1.HWBB	5.FWA	9.No Heat	
2.HWCI	6.GravWA	10.	
3.H Pump	7.Electric	11.	
4.Steam	8.Fl/Wall	12.	
Cool Type	**0%**	**9 None**	
1.Refrig	4.W&C Air	7.	
2.Evapor	5.	8.	
3.H Pump	6.	9.None	
Kitchen Style	**2 Typical**		
1.Modern	4.Obsolete	7.	
2.Typical	5.	8.	
3.Old Type	6.	9.None	
Bath(s) Style	**2 Typical Bath(s)**		
1.Modern	4.Obsolete	7.	
2.Typical	5.	8.	
3.Old Type	6.	9.None	
# Rooms	**5**		
# Bedrooms	**3**		
# Full Baths	**1**		
# Half Baths	**1**		
# Addn Fixtures	**0**		
# Fireplaces	**0**		

TRIO Software
A Division of Harris Computer Systems

Layout	**1 Typical**		
1.Typical	4.	7.	
2.Inadeq	5.	8.	
3.Poor	6.	9.	
Attic	**9 None**		
1.1/4 Fin	4.Full Fin	7.	
2.1/2 Fin	5.Fl/Stair	8.	
3.3/4 Fin	6.	9.None	
Insulation	**1 Full**		
1.Full	4.Minimal	7.	
2.Heavy	5.Partial	8.	
3.Capped	6.	9.None	
Unfinished %	**0%**		
Grade & Factor	**3 Average 90%**		
1.E Grade	4.B Grade	7.	
2.D Grade	5.A Grade	8.SC Grade	
3.C Grade	6.AA Grade	9.Same	
SQFT (Footprint)	**1176**		
Condition	**3 Below Average**		
1.Poor	4.Avg	7.V G	
2.Fair	5.Avg+	8.Exc	
3.Avg-	6.Good	9.Same	
Phys. % Good	**0%**		
Funct. % Good	**100%**		
Functional Code	**9 None**		
1.Incomp	4.Delap	7.No Power	
2.O-Built	5.Bsmt	8.LongTerm	
3.Damage	6.Common	9.None	
Econ. % Good	**100%**		
Economic Code	**None**		
0.None	3.No Power	7.	
1.Location	4.Generate	8.	
2.Encroach	9.None	9.	
Entrance Code	**5 Estimated**		
1.Interior	4.Vacant	7.	
2.Refusal	5.Estimate	8.	
3.Informed	6.Reviewed	9.	
Information Code	**5 Estimate**		
1.Owner	4.Agent	7.	
2.Relative	5.Estimate	8.	
3.Tenant	6.Other	9.	

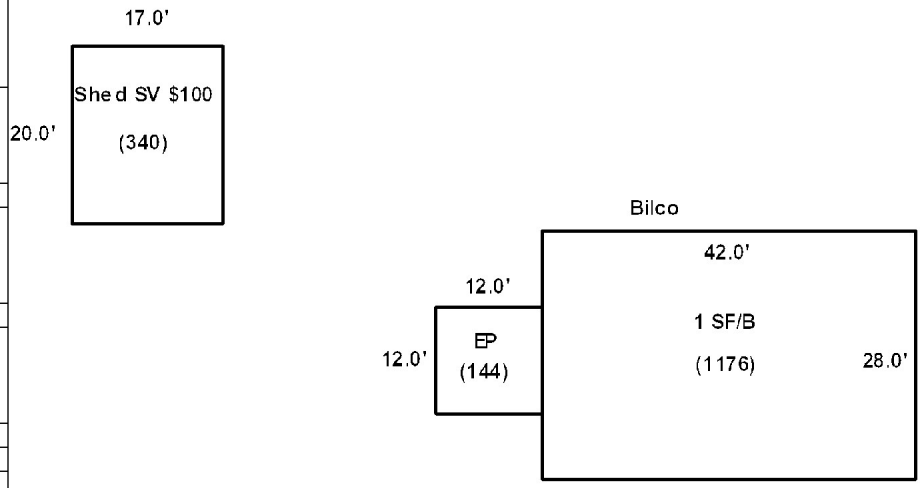

Date Inspected 9/23/2018

Additions, Outbuildings & Improvements

Type	Year	Units	Grade	Cond	Phys.	Funct.	Sound Value
22 Encl Frame Porch	2000	144	2 105	3	0 %	100 %	
24 Frame Shed	0				%	%	100
					%	%	
					%	%	
					%	%	
					%	%	
					%	%	
					%	%	
					%	%	
					%	%	

1.One Story Fram
2.Two Story Fram
3.Three Story Fr
4.1 & 1/2 Story
5.1 & 3/4 Story
6.2 & 1/2 Story
21.Open Frame Por
22.Encl Frame Por
23.Frame Garage
24.Frame Shed
25.Frame Bay Wind
26.1SFr Overhang
27.Unfin Basement
28.Unfinished Att
29.Finished Attic

Map Lot 006-002 | Account 532 | Location 440 CROSS ROAD | Card 1 Of 1 | 11/18/2020

HENTHORN, JAMES E.
HENTHORN, EVA A.
478 CROSS ROAD

WASHBURN ME 04786
B5530P97

Previous Owner
AROOSTOOK COUNTY FEDERAL
SAVINGS AND LOAN ASSOCIATION
PO BOX 808
CARIBOU ME 04736
Sale Date: 4/14/2016

Previous Owner
IRVINE, CLARENCE E.
440 CROSS ROAD

WASHBURN ME 04786
Sale Date: 2/20/2015

Inspection Witnessed By:

X Date

No./Date	Description	Date Insp.

Notes:
* Box trailer being leased, no value, assessed as personal property.

Washburn

Property Data

Neighborhood **1 Neighborhood One**

Tree Growth Year **0**

1ST MORTGAGE **0**

2ND MORTGAGE **0**

Zone/Land Use **1 Residential**

Secondary Zone

Topography **1 Level**

1.Level	4.Below St	7.LevelBog
2.Rolling	5.Low	8.
3.Above St	6.Swampy	9.

Utilities **4 Drilled Well** **6 Septic System**

1.Public	4.Dr Well	7.Cesspool
2.Water	5.Dug Well	8.
3.Sewer	6.Septic	9.None

Street **1 Paved**

1.Paved	4.Proposed	7.
2.Semi Imp	5.R/O/W	8.
3.Gravel	6.	9.None

TG PLAN YEAR **0**

Tif District # **0**

Sale Data

Sale Date **4/14/2016**

Price

Sale Type **2 Land & Buildings**

1.Land	4.Mobile	7.C/I L&B
2.L & B	5.Other	8.
3.Building	6.C/I Land	9.

Financing

1.Convent	4.Seller	7.
2.FHA/VA	5.Private	8.
3.Assumed	6.Cash	9.Unknown

Validity **3 Distressed Sale**

1.Valid	4.Split	7.Renovate
2.Related	5.Partial	8.Other
3.Distress	6.Exempt	9.

Verified **5 Public Record**

1.Buyer	4.Agent	7.Family
2.Seller	5.Pub Rec	8.Other
3.Lender	6.MLS	9.

Assessment Record

Year	Land	Buildings	Exempt	Total
2007	9,000	36,800	13,000	32,800
2008	9,000	36,800	13,000	32,800
2009	9,000	36,800	0	45,800
2012	9,000	36,800	0	45,800
2013	11,700	36,800	0	48,500
2015	11,700	36,800	0	48,500
2018	11,700	17,300	0	29,000
2019	19,000	15,700	0	34,700
2020	19,000	15,700	0	34,700

Land Data

Front Foot	Type	Effective Frontage	Effective Depth	Influence Factor	Influence Code
11.Regular Lot				%	
12.Delta Triangle				%	
13.Nabla Triangle				%	
14.Rear Land				%	
15.Class I Road				%	
				%	
				%	
Square Foot		**Square Feet**			
16.Class II Road				%	
17.Municipal Rese				%	
18.Munic Sep Lago				%	
19.Gravel Pit				%	
20.Industrial Bas				%	
				%	
				%	
Fract. Acre		**Acreage/Sites**			
21.Developed Pave	21	1.00	100	%	0
22.Undev Paved (F	28	5.00	100	%	0
23.Developed Grav				%	
Acres				%	
24.Undev Gravel (				%	
25.Comm Base Pave				%	
26.Comm Base Grav				%	
27.Backlot				%	
28.Rear Land				%	
29.Pavement				%	

Total Acreage 6.00

Influence Codes

1.Unimproved
2.Excess Frtg
3.Topography
4.Size/Shape
5.Access
6.Restriction
7.Open Space
8.View/Environ
9.Fract Share
Acres
30.Utility R O W
31.Tillable
32.Pasture
33.Orchard
34.Softwood F&O
35.Mixed Wood F&O
36.Hardwood F&O
37.Softwood TG
38.Mixed Wood TG
39.Hardwood TG
40.Wasteland
41.Open Space
42.Mobile Home Si
43.Condo Site
44.Lot Improvemen
45.Subdivision Lo
46.Heavy Ind Sit

Washburn

Map Lot 006-002 | Account 532 | Location 440 CROSS ROAD | Card 1 Of 1 | 11/18/2020

Building Style	**4 Cape Cod**		
1.Conv.	5.Garrison	9.Gambrel	
2.Ranch	6.Salt Box	10.Other	
3.R Ranch	7.Contemp	11.Split	
4.Cape	8.Log	12.	
Dwelling Units	**1**		
Other Units	**0**		
Stories	**4 One & 1/2 Story**		
1.1	4.1.5	7.	
2.2	5.1.75	8.	
3.3	6.2.5	9.	
Exterior Walls	**1 Wood Siding**		
1.Wood	5.Stucco	9.T-111	
2.Vin/Al	6.Brick	10.Other	
3.Compos.	7.Stone	11.	
4.Asbestos	8.Concrete	12.	
Roof Surface	**3 Sheet Metal**		
1.Asphalt	4.Composit	7.	
2.Slate	5.Wood	8.	
3.Metal	6.Other	9.	
SF Masonry Trim	**0**		
OPEN-3-CUSTOM	**0**		
OPEN-4-CUSTOM	**0**		
Year Built	**1900**		
Year Remodeled	**0**		
Foundation	**1 Concrete**		
1.Concrete	4.Wood	7.	
2.C Block	5.Slab	8.	
3.Br/Stone	6.Piers	9.	
Basement	**4 Full Basement**		
1.1/4 Bmt	4.Full Bmt	7.	
2.1/2 Bmt	5.None	8.	
3.3/4 Bmt	6.	9.None	
Bsmt Gar # Cars	**0**		
Wet Basement	**3 Wet Basement**		
1.Dry	4.	7.	
2.Damp	5.	8.	
3.Wet	6.	9.	

SF Bsmt Living	**0**		
Fin Bsmt Grade	**0 0**		
OPEN 5 OPTIONAL	**0**		
Heat Type	**100%**	**9 Not Heated**	
1.HWBB	5.FWA	9.No Heat	
2.HWCI	6.GravWA	10.	
3.H Pump	7.Electric	11.	
4.Steam	8.Fl/Wall	12.	
Cool Type	**0%**	**9 None**	
1.Refrig	4.W&C Air	7.	
2.Evapor	5.	8.	
3.H Pump	6.	9.None	
Kitchen Style	**3 Old Style**		
1.Modern	4.Obsolete	7.	
2.Typical	5.	8.	
3.Old Type	6.	9.None	
Bath(s) Style	**3 Old Style**		
1.Modern	4.Obsolete	7.	
2.Typical	5.	8.	
3.Old Type	6.	9.None	
# Rooms	**6**		
# Bedrooms	**4**		
# Full Baths	**0**		
# Half Baths	**0**		
# Addn Fixtures	**0**		
# Fireplaces	**0**		

TRIO Software
A Division of Harris Computer Systems

Layout	**1 Typical**		
1.Typical	4.	7.	
2.Inadeq	5.	8.	
3.Poor	6.	9.	
Attic	**9 None**		
1.1/4 Fin	4.Full Fin	7.	
2.1/2 Fin	5.Fl/Stair	8.	
3.3/4 Fin	6.	9.None	
Insulation	**4 Minimal**		
1.Full	4.Minimal	7.	
2.Heavy	5.Partial	8.	
3.Capped	6.	9.None	
Unfinished %	**0%**		
Grade & Factor	**1 Low 100%**		
1.E Grade	4.B Grade	7.	
2.D Grade	5.A Grade	8.SC Grade	
3.C Grade	6.AA Grade	9.Same	
SQFT (Footprint)	**615**		
Condition	**1 Poor**		
1.Poor	4.Avg	7.V G	
2.Fair	5.Avg+	8.Exc	
3.Avg-	6.Good	9.Same	
Phys. % Good	**0%**		
Funct. % Good	**50%**		
Functional Code	**4 Delapidation**		
1.Incomp	4.Delap	7.No Power	
2.O-Built	5.Bsmt	8.LongTerm	
3.Damage	6.Common	9.None	
Econ. % Good	**100%**		
Economic Code	**None**		
0.None	3.No Power	7.	
1.Location	4.Generate	8.	
2.Encroach	9.None	9.	
Entrance Code	**5 Estimated**		
1.Interior	4.Vacant	7.	
2.Refusal	5.Estimate	8.	
3.Informed	6.Reviewed	9.	
Information Code	**5 Estimate**		
1.Owner	4.Agent	7.	
2.Relative	5.Estimate	8.	
3.Tenant	6.Other	9.	

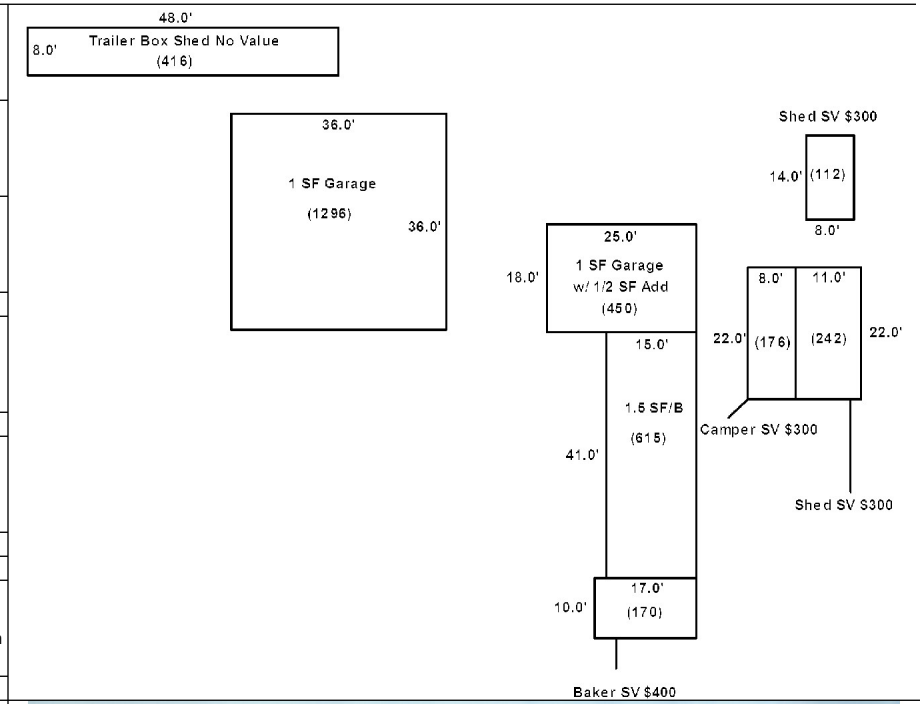

Date Inspected 9/23/2018

Additions, Outbuildings & Improvements

Type	Year	Units	Grade	Cond	Phys.	Funct.	Sound Value
79 1/2S-Ad/Gar	1900	450	2 100	2	0 %	75 %	
58 Baker	0				%	%	400
23 Frame Garage	1950	1296	2 105	3	0 %	65 %	
24 Frame Shed	0				%	%	300
85 Camper Trlr	0				%	%	300
24 Frame Shed	0				%	%	300
					%	%	
					%	%	
					%	%	
					%	%	

1.One Story Fram
2.Two Story Fram
3.Three Story Fr
4.1 & 1/2 Story
5.1 & 3/4 Story
6.2 & 1/2 Story
21.Open Frame Por
22.Encl Frame Por
23.Frame Garage
24.Frame Shed
25.Frame Bay Wind
26.1SFr Overhang
27.Unfin Basement
28.Unfinished Att
29.Finished Attic

Map Lot 006-002A | Account 366 | Location 478 Cross Road | Card 1 Of 1 | 11/18/2020

HENTHORN, JAMES E.
HENTHORN, EVA A.
478 CROSS ROAD

Washburn ME 04786
B2625P237 B4772P31

Property Data

Neighborhood	**1 Neighborhood One**
Tree Growth Year	**0**
1ST MORTGAGE	**0**
2ND MORTGAGE	**0**
Zone/Land Use	**1 Residential**
Secondary Zone	
Topography	**1 Level**

1.Level	4.Below St	7.LevelBog
2.Rolling	5.Low	8.
3.Above St	6.Swampy	9.

Utilities	**4 Drilled Well**	**6 Septic System**
1.Public	4.Dr Well	7.Cesspool
2.Water	5.Dug Well	8.
3.Sewer	6.Septic	9.None

Street	**1 Paved**	
1.Paved	4.Proposed	7.
2.Semi Imp	5.R/O/W	8.
3.Gravel	6.	9.None

TG PLAN YEAR	**0**
Tif District #	**0**

Sale Data

Sale Date	**11/05/1993**
Price	**8,000**

Sale Type	**2 Land & Buildings**	
1.Land	4.Mobile	7.C/I L&B
2.L & B	5.Other	8.
3.Building	6.C/I Land	9.
Financing	**1 Conventional**	
1.Convent	4.Seller	7.
2.FHA/VA	5.Private	8.
3.Assumed	6.Cash	9.Unknown
Validity	**1 Arms Length Sale**	
1.Valid	4.Split	7.Renovate
2.Related	5.Partial	8.Other
3.Distress	6.Exempt	9.
Verified	**5 Public Record**	
1.Buyer	4.Agent	7.Family
2.Seller	5.Pub Rec	8.Other
3.Lender	6.MLS	9.

Assessment Record

Year	Land	Buildings	Exempt	Total
2007	7,700	19,300	13,000	14,000
2008	7,700	19,300	13,000	14,000
2009	7,700	19,300	9,000	18,000
2012	7,700	19,300	8,800	18,200
2013	9,900	19,300	8,800	20,400
2015	9,900	19,300	9,000	20,200
2018	9,900	19,300	18,400	10,800
2019	17,700	32,600	20,000	30,300
2020	17,700	32,200	25,000	24,900

Land Data

Front Foot	Type	Effective Frontage	Effective Depth	Influence Factor	Influence Code
11.Regular Lot				%	
12.Delta Triangle				%	
13.Nabla Triangle				%	
14.Rear Land				%	
15.Class I Road				%	
				%	
				%	
Square Foot		**Square Feet**			
16.Class II Road				%	
17.Municipal Rese				%	
18.Munic Sep Lago				%	
19.Gravel Pit				%	
20.Industrial Bas				%	
				%	
				%	
Fract. Acre		**Acreage/Sites**			
21.Developed Pave	21	1.00	100	%	0
22.Undev Paved (F	28	2.30	100	%	0
23.Developed Grav				%	
Acres				%	
24.Undev Gravel (				%	
25.Comm Base Pave				%	
26.Comm Base Grav				%	
27.Backlot				%	
28.Rear Land				%	
29.Pavement				%	

Total Acreage 3.30

Influence Codes

1.Unimproved
2.Excess Frtg
3.Topography
4.Size/Shape
5.Access
6.Restriction
7.Open Space
8.View/Environ
9.Fract Share
Acres
30.Utility R O W
31.Tillable
32.Pasture
33.Orchard
34.Softwood F&O
35.Mixed Wood F&O
36.Hardwood F&O
37.Softwood TG
38.Mixed Wood TG
39.Hardwood TG
40.Wasteland
41.Open Space
42.Mobile Home Si
43.Condo Site
44.Lot Improvemen
45.Subdivision Lo
46.Heavy Ind Sit

Inspection Witnessed By:

X Date

No./Date	Description	Date Insp.

Notes:

Washburn

Washburn

Map Lot 006-002A | Account 366 | Location 478 Cross Road | Card 1 Of 1 | 11/18/2020

Building Style	**2 Ranch**		
1.Conv.	5.Garrison	9.Gambrel	
2.Ranch	6.Salt Box	10.Other	
3.R Ranch	7.Contemp	11.Split	
4.Cape	8.Log	12.	
Dwelling Units	**1**		
Other Units	**0**		
Stories	**1 One Story**		
1.1	4.1.5	7.	
2.2	5.1.75	8.	
3.3	6.2.5	9.	
Exterior Walls	**1 Wood Siding**		
1.Wood	5.Stucco	9.T-111	
2.Vin/Al	6.Brick	10.Other	
3.Compos.	7.Stone	11.	
4.Asbestos	8.Concrete	12.	
Roof Surface	**3 Sheet Metal**		
1.Asphalt	4.Composit	7.	
2.Slate	5.Wood	8.	
3.Metal	6.Other	9.	
SF Masonry Trim	**0**		
OPEN-3-CUSTOM	**0**		
OPEN-4-CUSTOM	**0**		
Year Built	**1993**		
Year Remodeled	**0**		
Foundation	**5 Concrete Slab**		
1.Concrete	4.Wood	7.	
2.C Block	5.Slab	8.	
3.Br/Stone	6.Piers	9.	
Basement	**9 No Basement**		
1.1/4 Bmt	4.Full Bmt	7.	
2.1/2 Bmt	5.None	8.	
3.3/4 Bmt	6.	9.None	
Bsmt Gar # Cars	**0**		
Wet Basement	**9 No Basement**		
1.Dry	4.	7.	
2.Damp	5.	8.	
3.Wet	6.	9.	

SF Bsmt Living	**0**		
Fin Bsmt Grade	**0 0**		
OPEN 5 OPTIONAL	**0**		
Heat Type	**100%**	**5 Forced Warm Air**	
1.HWBB	5.FWA	9.No Heat	
2.HWCI	6.GravWA	10.	
3.H Pump	7.Electric	11.	
4.Steam	8.Fl/Wall	12.	
Cool Type	**0%**	**9 None**	
1.Refrig	4.W&C Air	7.	
2.Evapor	5.	8.	
3.H Pump	6.	9.None	
Kitchen Style	**2 Typical**		
1.Modern	4.Obsolete	7.	
2.Typical	5.	8.	
3.Old Type	6.	9.None	
Bath(s) Style	**2 Typical Bath(s)**		
1.Modern	4.Obsolete	7.	
2.Typical	5.	8.	
3.Old Type	6.	9.None	
# Rooms	**4**		
# Bedrooms	**2**		
# Full Baths	**1**		
# Half Baths	**0**		
# Addn Fixtures	**0**		
# Fireplaces	**0**		

TRIO Software
A Division of Harris Computer Systems

Layout	**1 Typical**		
1.Typical	4.	7.	
2.Inadeq	5.	8.	
3.Poor	6.	9.	
Attic	**9 None**		
1.1/4 Fin	4.Full Fin	7.	
2.1/2 Fin	5.Fl/Stair	8.	
3.3/4 Fin	6.	9.None	
Insulation	**1 Full**		
1.Full	4.Minimal	7.	
2.Heavy	5.Partial	8.	
3.Capped	6.	9.None	
Unfinished %	**0%**		
Grade & Factor	**2 Fair 100%**		
1.E Grade	4.B Grade	7.	
2.D Grade	5.A Grade	8.SC Grade	
3.C Grade	6.AA Grade	9.Same	
SQFT (Footprint)	**900**		
Condition	**3 Below Average**		
1.Poor	4.Avg	7.V G	
2.Fair	5.Avg+	8.Exc	
3.Avg-	6.Good	9.Same	
Phys. % Good	**0%**		
Funct. % Good	**60%**		
Functional Code	**4 Delapidation**		
1.Incomp	4.Delap	7.No Power	
2.O-Built	5.Bsmt	8.LongTerm	
3.Damage	6.Common	9.None	
Econ. % Good	**100%**		
Economic Code	**None**		
0.None	3.No Power	7.	
1.Location	4.Generate	8.	
2.Encroach	9.None	9.	
Entrance Code	**3 Information Only**		
1.Interior	4.Vacant	7.	
2.Refusal	5.Estimate	8.	
3.Informed	6.Reviewed	9.	
Information Code	**1 Owner**		
1.Owner	4.Agent	7.	
2.Relative	5.Estimate	8.	
3.Tenant	6.Other	9.	

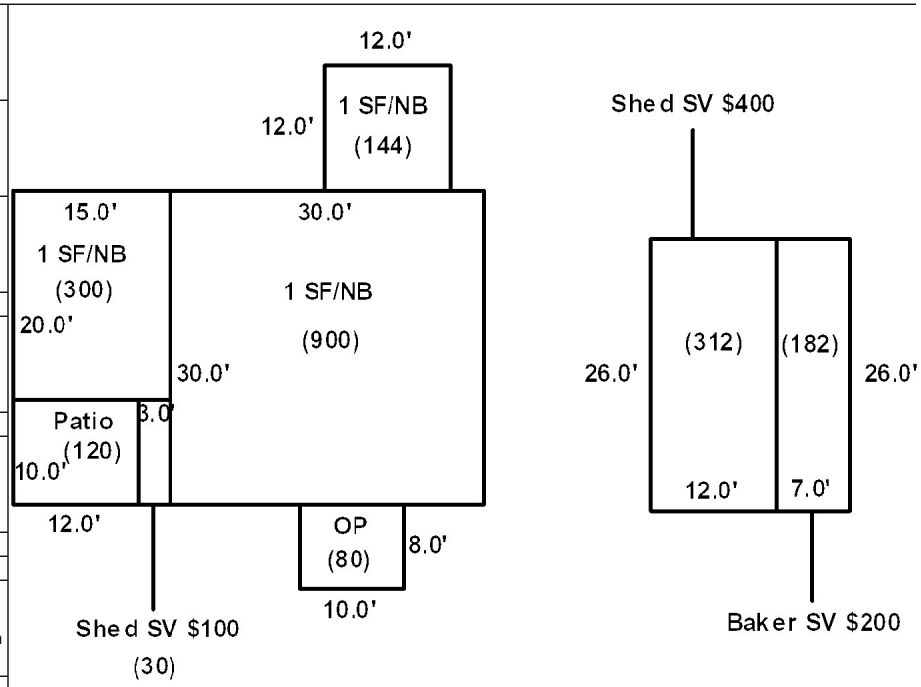

Date Inspected 9/23/2018

Additions, Outbuildings & Improvements

Type	Year	Units	Grade	Cond	Phys.	Funct.	Sound Value
21 Open Frame	2000	80	3 90	3	0 %	100 %	
24 Frame Shed	0				%	%	100
62 Patio	1993	120	2 110	3	0 %	100 %	
1 One Story Frame	2000	300	2 110	2	0 %	100 %	
1 One Story Frame	2000	144	2 110	2	0 %	100 %	
24 Frame Shed	0				%	%	400
58 Baker	0				%	%	200
					%	%	
					%	%	
					%	%	

1.One Story Fram
2.Two Story Fram
3.Three Story Fr
4.1 & 1/2 Story
5.1 & 3/4 Story
6.2 & 1/2 Story
21.Open Frame Por
22.Encl Frame Por
23.Frame Garage
24.Frame Shed
25.Frame Bay Wind
26.1SFr Overhang
27.Unfin Basement
28.Unfinished Att
29.Finished Attic

Map Lot 006-002B | Account 613 | Location CROSS ROAD | Card 1 Of 1 | 11/18/2020

PESUT, NICHOLAS
PESUT, ANDREA
P.O. BOX 488

CROUSEVILLE ME 04738
B2719P88 B4768P233

Property Data

Neighborhood **1 Neighborhood One**

Tree Growth Year **0**

1ST MORTGAGE **0**

2ND MORTGAGE **0**

Zone/Land Use **1 Residential**

Secondary Zone

Topography **1 Level**

1.Level	4.Below St	7.LevelBog
2.Rolling	5.Low	8.
3.Above St	6.Swampy	9.

Utilities

1.Public	4.Dr Well	7.Cesspool
2.Water	5.Dug Well	8.
3.Sewer	6.Septic	9.None

Street **1 Paved**

1.Paved	4.Proposed	7.
2.Semi Imp	5.R/O/W	8.
3.Gravel	6.	9.None

TG PLAN YEAR **0**

Tif District # **0**

Sale Data

Sale Date **8/25/1994**

Price

Sale Type **1 Land Only**

1.Land	4.Mobile	7.C/I L&B
2.L & B	5.Other	8.
3.Building	6.C/I Land	9.

Financing **1 Conventional**

1.Convent	4.Seller	7.
2.FHA/VA	5.Private	8.
3.Assumed	6.Cash	9.Unknown

Validity **1 Arms Length Sale**

1.Valid	4.Split	7.Renovate
2.Related	5.Partial	8.Other
3.Distress	6.Exempt	9.

Verified **5 Public Record**

1.Buyer	4.Agent	7.Family
2.Seller	5.Pub Rec	8.Other
3.Lender	6.MLS	9.

Assessment Record

Year	Land	Buildings	Exempt	Total
2007	43,300	0	0	43,300
2008	43,300	0	0	43,300
2009	43,300	0	0	43,300
2012	43,300	0	0	43,300
2013	56,200	0	0	56,200
2015	56,200	0	0	56,200
2018	56,200	0	0	56,200
2019	130,400	0	0	130,400
2020	130,400	0	0	130,400

Land Data

Front Foot	Type	Effective Frontage	Effective Depth	Influence Factor	Influence Code
11.Regular Lot				%	
12.Delta Triangle				%	
13.Nabla Triangle				%	
14.Rear Land				%	
15.Class I Road				%	
				%	
				%	
Square Foot		**Square Feet**			
16.Class II Road				%	
17.Municipal Rese				%	
18.Munic Sep Lago				%	
19.Gravel Pit				%	
20.Industrial Bas				%	
				%	
				%	
Fract. Acre		**Acreage/Sites**			
21.Developed Pave	22	1.00	100	%	0
22.Undev Paved (F	28	108.70	100	%	0
23.Developed Grav	31	67.00	100	%	0
Acres				%	
24.Undev Gravel (				%	
25.Comm Base Pave				%	
26.Comm Base Grav				%	
27.Backlot				%	
28.Rear Land				%	
29.Pavement				%	

Total Acreage 176.70

Influence Codes

1.Unimproved
2.Excess Frtg
3.Topography
4.Size/Shape
5.Access
6.Restriction
7.Open Space
8.View/Environ
9.Fract Share
Acres
30.Utility R O W
31.Tillable
32.Pasture
33.Orchard
34.Softwood F&O
35.Mixed Wood F&O
36.Hardwood F&O
37.Softwood TG
38.Mixed Wood TG
39.Hardwood TG
40.Wasteland
41.Open Space
42.Mobile Home Si
43.Condo Site
44.Lot Improvemen
45.Subdivision Lo
46.Heavy Ind Sit

Inspection Witnessed By:

X Date

No./Date	Description	Date Insp.

Notes:

Washburn

Washburn

Map Lot 006-002B | Account 613 | Location CROSS ROAD | Card 1 Of 1 | 11/18/2020

Building Style **0**		
1.Conv.	5.Garrison	9.Gambrel
2.Ranch	6.Salt Box	10.Other
3.R Ranch	7.Contemp	11.Split
4.Cape	8.Log	12.
Dwelling Units **0**		
Other Units **0**		
Stories **0**		
1.1	4.1.5	7.
2.2	5.1.75	8.
3.3	6.2.5	9.
Exterior Walls **0**		
1.Wood	5.Stucco	9.T-111
2.Vin/Al	6.Brick	10.Other
3.Compos.	7.Stone	11.
4.Asbestos	8.Concrete	12.
Roof Surface **0**		
1.Asphalt	4.Composit	7.
2.Slate	5.Wood	8.
3.Metal	6.Other	9.
SF Masonry Trim **0**		
OPEN-3-CUSTOM **0**		
OPEN-4-CUSTOM **0**		
Year Built **0**		
Year Remodeled **0**		
Foundation **0**		
1.Concrete	4.Wood	7.
2.C Block	5.Slab	8.
3.Br/Stone	6.Piers	9.
Basement **0**		
1.1/4 Bmt	4.Full Bmt	7.
2.1/2 Bmt	5.None	8.
3.3/4 Bmt	6.	9.None
Bsmt Gar # Cars **0**		
Wet Basement **0**		
1.Dry	4.	7.
2.Damp	5.	8.
3.Wet	6.	9.

SF Bsmt Living **0**		
Fin Bsmt Grade **0 0**		
OPEN 5 OPTIONAL **0**		
Heat Type **100%** **0**		
1.HWBB	5.FWA	9.No Heat
2.HWCI	6.GravWA	10.
3.H Pump	7.Electric	11.
4.Steam	8.Fl/Wall	12.
Cool Type **0%** **9 None**		
1.Refrig	4.W&C Air	7.
2.Evapor	5.	8.
3.H Pump	6.	9.None
Kitchen Style **0**		
1.Modern	4.Obsolete	7.
2.Typical	5.	8.
3.Old Type	6.	9.None
Bath(s) Style **0**		
1.Modern	4.Obsolete	7.
2.Typical	5.	8.
3.Old Type	6.	9.None
# Rooms **0**		
# Bedrooms **0**		
# Full Baths **0**		
# Half Baths **0**		
# Addn Fixtures **0**		
# Fireplaces **0**		

TRIO Software
A Division of Harris Computer Systems

Layout **0**		
1.Typical	4.	7.
2.Inadeq	5.	8.
3.Poor	6.	9.
Attic **0**		
1.1/4 Fin	4.Full Fin	7.
2.1/2 Fin	5.Fl/Stair	8.
3.3/4 Fin	6.	9.None
Insulation **0**		
1.Full	4.Minimal	7.
2.Heavy	5.Partial	8.
3.Capped	6.	9.None
Unfinished % **0%**		
Grade & Factor **0 0%**		
1.E Grade	4.B Grade	7.
2.D Grade	5.A Grade	8.SC Grade
3.C Grade	6.AA Grade	9.Same
SQFT (Footprint) **0**		
Condition **0**		
1.Poor	4.Avg	7.V G
2.Fair	5.Avg+	8.Exc
3.Avg-	6.Good	9.Same
Phys. % Good **0%**		
Funct. % Good **100%**		
Functional Code **9 None**		
1.Incomp	4.Delap	7.No Power
2.O-Built	5.Bsmt	8.LongTerm
3.Damage	6.Common	9.None
Econ. % Good **100%**		
Economic Code **None**		
0.None	3.No Power	7.
1.Location	4.Generate	8.
2.Encroach	9.None	9.
Entrance Code **0**		
1.Interior	4.Vacant	7.
2.Refusal	5.Estimate	8.
3.Informed	6.Reviewed	9.
Information Code **0**		
1.Owner	4.Agent	7.
2.Relative	5.Estimate	8.
3.Tenant	6.Other	9.

Date Inspected

Additions, Outbuildings & Improvements

Type	Year	Units	Grade	Cond	Phys.	Funct.	Sound Value
					%	%	
					%	%	
					%	%	
					%	%	
					%	%	
					%	%	
					%	%	
					%	%	
					%	%	
					%	%	

1.One Story Fram
2.Two Story Fram
3.Three Story Fr
4.1 & 1/2 Story
5.1 & 3/4 Story
6.2 & 1/2 Story
21.Open Frame Por
22.Encl Frame Por
23.Frame Garage
24.Frame Shed
25.Frame Bay Wind
26.1SFr Overhang
27.Unfin Basement
28.Unfinished Att
29.Finished Attic

Map Lot 006-003 Account 1022 Location Cross Road Card 1 Of 1 11/18/2020

White Farms Inc.

311 Cross Road

Washburn ME 04786

Property Data

Neighborhood **1 Neighborhood One**

Tree Growth Year **0**

1ST MORTGAGE **0**

2ND MORTGAGE **0**

Zone/Land Use **2 Commercial**

Secondary Zone

Topography **2 Rolling**

1.Level	4.Below St	7.LevelBog
2.Rolling	5.Low	8.
3.Above St	6.Swampy	9.

Utilities

1.Public	4.Dr Well	7.Cesspool
2.Water	5.Dug Well	8.
3.Sewer	6.Septic	9.None

Street **1 Paved**

1.Paved	4.Proposed	7.
2.Semi Imp	5.R/O/W	8.
3.Gravel	6.	9.None

TG PLAN YEAR **0**

Tif District # **0**

Sale Data

Sale Date

Price

Sale Type **1 Land Only**

1.Land	4.Mobile	7.C/I L&B
2.L & B	5.Other	8.
3.Building	6.C/I Land	9.

Financing

1.Convent	4.Seller	7.
2.FHA/VA	5.Private	8.
3.Assumed	6.Cash	9.Unknown

Validity

1.Valid	4.Split	7.Renovate
2.Related	5.Partial	8.Other
3.Distress	6.Exempt	9.

Verified

1.Buyer	4.Agent	7.Family
2.Seller	5.Pub Rec	8.Other
3.Lender	6.MLS	9.

Assessment Record

Year	Land	Buildings	Exempt	Total
2007	47,400	0	0	47,400
2008	47,400	0	0	47,400
2009	47,400	0	0	47,400
2012	47,400	0	0	47,400
2013	61,600	0	0	61,600
2015	61,600	0	0	61,600
2018	61,600	0	0	61,600
2019	103,500	0	0	103,500
2020	103,500	0	0	103,500

Land Data

Front Foot	Type	Effective Frontage	Effective Depth	Influence Factor	Influence Code
11.Regular Lot				%	
12.Delta Triangle				%	
13.Nabla Triangle				%	
14.Rear Land				%	
15.Class I Road				%	
				%	
				%	
Square Foot		**Square Feet**			
16.Class II Road				%	
17.Municipal Rese				%	
18.Munic Sep Lago				%	
19.Gravel Pit				%	
20.Industrial Bas				%	
				%	
				%	
Fract. Acre		**Acreage/Sites**			
21.Developed Pave	28	119.00	100	%	0
22.Undev Paved (F	31	44.00	100	%	0
23.Developed Grav				%	
Acres				%	
24.Undev Gravel (				%	
25.Comm Base Pave				%	
26.Comm Base Grav				%	
27.Backlot				%	
28.Rear Land				%	
29.Pavement				%	

Total Acreage 163.00

Influence Codes

1.Unimproved
2.Excess Frtg
3.Topography
4.Size/Shape
5.Access
6.Restriction
7.Open Space
8.View/Environ
9.Fract Share
Acres
30.Utility R O W
31.Tillable
32.Pasture
33.Orchard
34.Softwood F&O
35.Mixed Wood F&O
36.Hardwood F&O
37.Softwood TG
38.Mixed Wood TG
39.Hardwood TG
40.Wasteland
41.Open Space
42.Mobile Home Si
43.Condo Site
44.Lot Improvemen
45.Subdivision Lo
46.Heavy Ind Sit

Inspection Witnessed By:

X Date

No./Date	Description	Date Insp.

Notes:

Washburn

Washburn

Map Lot 006-003 | Account 1022 | Location Cross Road | Card 1 Of 1 | 11/18/2020

Building Style **0**		
1.Conv.	5.Garrison	9.Gambrel
2.Ranch	6.Salt Box	10.Other
3.R Ranch	7.Contemp	11.Split
4.Cape	8.Log	12.
Dwelling Units **0**		
Other Units **0**		
Stories **0**		
1.1	4.1.5	7.
2.2	5.1.75	8.
3.3	6.2.5	9.
Exterior Walls **0**		
1.Wood	5.Stucco	9.T-111
2.Vin/Al	6.Brick	10.Other
3.Compos.	7.Stone	11.
4.Asbestos	8.Concrete	12.
Roof Surface **0**		
1.Asphalt	4.Composit	7.
2.Slate	5.Wood	8.
3.Metal	6.Other	9.
SF Masonry Trim **0**		
OPEN-3-CUSTOM **0**		
OPEN-4-CUSTOM **0**		
Year Built **0**		
Year Remodeled **0**		
Foundation **0**		
1.Concrete	4.Wood	7.
2.C Block	5.Slab	8.
3.Br/Stone	6.Piers	9.
Basement **0**		
1.1/4 Bmt	4.Full Bmt	7.
2.1/2 Bmt	5.None	8.
3.3/4 Bmt	6.	9.None
Bsmt Gar # Cars **0**		
Wet Basement **0**		
1.Dry	4.	7.
2.Damp	5.	8.
3.Wet	6.	9.

SF Bsmt Living **0**		
Fin Bsmt Grade **0 0**		
OPEN 5 OPTIONAL **0**		
Heat Type **100%** **0**		
1.HWBB	5.FWA	9.No Heat
2.HWCI	6.GravWA	10.
3.H Pump	7.Electric	11.
4.Steam	8.Fl/Wall	12.
Cool Type **0%** **9 None**		
1.Refrig	4.W&C Air	7.
2.Evapor	5.	8.
3.H Pump	6.	9.None
Kitchen Style **0**		
1.Modern	4.Obsolete	7.
2.Typical	5.	8.
3.Old Type	6.	9.None
Bath(s) Style **0**		
1.Modern	4.Obsolete	7.
2.Typical	5.	8.
3.Old Type	6.	9.None
# Rooms **0**		
# Bedrooms **0**		
# Full Baths **0**		
# Half Baths **0**		
# Addn Fixtures **0**		
# Fireplaces **0**		

TRIO Software
A Division of Harris Computer Systems

Layout **0**		
1.Typical	4.	7.
2.Inadeq	5.	8.
3.Poor	6.	9.
Attic **0**		
1.1/4 Fin	4.Full Fin	7.
2.1/2 Fin	5.Fl/Stair	8.
3.3/4 Fin	6.	9.None
Insulation **0**		
1.Full	4.Minimal	7.
2.Heavy	5.Partial	8.
3.Capped	6.	9.None
Unfinished % **0%**		
Grade & Factor **0 0%**		
1.E Grade	4.B Grade	7.
2.D Grade	5.A Grade	8.SC Grade
3.C Grade	6.AA Grade	9.Same
SQFT (Footprint) **0**		
Condition **0**		
1.Poor	4.Avg	7.V G
2.Fair	5.Avg+	8.Exc
3.Avg-	6.Good	9.Same
Phys. % Good **0%**		
Funct. % Good **100%**		
Functional Code **9 None**		
1.Incomp	4.Delap	7.No Power
2.O-Built	5.Bsmt	8.LongTerm
3.Damage	6.Common	9.None
Econ. % Good **100%**		
Economic Code **None**		
0.None	3.No Power	7.
1.Location	4.Generate	8.
2.Encroach	9.None	9.
Entrance Code **0**		
1.Interior	4.Vacant	7.
2.Refusal	5.Estimate	8.
3.Informed	6.Reviewed	9.
Information Code **0**		
1.Owner	4.Agent	7.
2.Relative	5.Estimate	8.
3.Tenant	6.Other	9.

Date Inspected

Additions, Outbuildings & Improvements

Type	Year	Units	Grade	Cond	Phys.	Funct.	Sound Value
					%	%	
					%	%	
					%	%	
					%	%	
					%	%	
					%	%	
					%	%	
					%	%	
					%	%	
					%	%	

1.One Story Fram
2.Two Story Fram
3.Three Story Fr
4.1 & 1/2 Story
5.1 & 3/4 Story
6.2 & 1/2 Story
21.Open Frame Por
22.Encl Frame Por
23.Frame Garage
24.Frame Shed
25.Frame Bay Wind
26.1SFr Overhang
27.Unfin Basement
28.Unfinished Att
29.Finished Attic

Map Lot 006-004A | Account 738 | Location 556 CROSS ROAD | Card 1 Of 2 | 11/18/2020

McCRUM, TROY D.
McCRUM, NICHOLE U.
556 CROSS ROAD

WASHBURN ME 04786
B3678P271 B5295P93 B5378P26

Property Data

Neighborhood **1 Neighborhood One**

Tree Growth Year **0**

1ST MORTGAGE **0**

2ND MORTGAGE **0**

Zone/Land Use **1 Residential**

Secondary Zone

Topography **1 Level**

1.Level	4.Below St	7.LevelBog
2.Rolling	5.Low	8.
3.Above St	6.Swampy	9.

Utilities **4 Drilled Well** **6 Septic System**

1.Public	4.Dr Well	7.Cesspool
2.Water	5.Dug Well	8.
3.Sewer	6.Septic	9.None

Street **1 Paved**

1.Paved	4.Proposed	7.
2.Semi Imp	5.R/O/W	8.
3.Gravel	6.	9.None

TG PLAN YEAR **0**

Tif District # **0**

Sale Data

Sale Date

Price

Sale Type

1.Land	4.Mobile	7.C/I L&B
2.L & B	5.Other	8.
3.Building	6.C/I Land	9.

Financing

1.Convent	4.Seller	7.
2.FHA/VA	5.Private	8.
3.Assumed	6.Cash	9.Unknown

Validity

1.Valid	4.Split	7.Renovate
2.Related	5.Partial	8.Other
3.Distress	6.Exempt	9.

Verified

1.Buyer	4.Agent	7.Family
2.Seller	5.Pub Rec	8.Other
3.Lender	6.MLS	9.

Assessment Record

Year	Land	Buildings	Exempt	Total
2007	6,500	59,900	13,000	53,400
2008	6,500	62,500	13,000	56,000
2009	6,500	65,100	9,000	62,600
2012	6,500	65,100	8,800	62,800
2013	8,500	65,100	8,800	64,800
2015	12,600	87,000	9,000	90,600
2018	12,600	87,000	18,400	81,200
2019	24,400	121,300	20,000	125,700
2020	24,400	121,100	25,000	120,500

Land Data

Front Foot	Type	Effective Frontage	Effective Depth	Influence Factor	Influence Code
11.Regular Lot				%	
12.Delta Triangle				%	
13.Nabla Triangle				%	
14.Rear Land				%	
15.Class I Road				%	
				%	
				%	
Square Foot		**Square Feet**			
16.Class II Road				%	
17.Municipal Rese				%	
18.Munic Sep Lago				%	
19.Gravel Pit				%	
20.Industrial Bas				%	
				%	
				%	
Fract. Acre		**Acreage/Sites**			
21.Developed Pave	21	1.00	100	%	0
22.Undev Paved (F	31	7.88	100	%	0
23.Developed Grav				%	
Acres				%	
24.Undev Gravel (				%	
25.Comm Base Pave				%	
26.Comm Base Grav				%	
27.Backlot				%	
28.Rear Land					
29.Pavement		**Total Acreage**	8.88		

Influence Codes

1.Unimproved
2.Excess Frtg
3.Topography
4.Size/Shape
5.Access
6.Restriction
7.Open Space
8.View/Environ
9.Fract Share
Acres
30.Utility R O W
31.Tillable
32.Pasture
33.Orchard
34.Softwood F&O
35.Mixed Wood F&O
36.Hardwood F&O
37.Softwood TG
38.Mixed Wood TG
39.Hardwood TG
40.Wasteland
41.Open Space
42.Mobile Home Si
43.Condo Site
44.Lot Improvemen
45.Subdivision Lo
46.Heavy Ind Sit

Inspection Witnessed By:

X Date

No./Date	Description	Date Insp.

Notes:

*12-31-2018 -15% On 1 SF and 1.75 SF Barn for size obs.
-20% for attached shed.

Washburn

Washburn

Map Lot 006-004A | Account 738 | Location 556 CROSS ROAD | Card 1 Of 2 | 11/18/2020

Building Style	**4 Cape Cod**		
1.Conv.	5.Garrison	9.Gambrel	
2.Ranch	6.Salt Box	10.Other	
3.R Ranch	7.Contemp	11.Split	
4.Cape	8.Log	12.	
Dwelling Units	**1**		
Other Units	**0**		
Stories	**4 One & 1/2 Story**		
1.1	4.1.5	7.	
2.2	5.1.75	8.	
3.3	6.2.5	9.	
Exterior Walls	**2 Vinyl/Aluminum**		
1.Wood	5.Stucco	9.T-111	
2.Vin/Al	6.Brick	10.Other	
3.Compos.	7.Stone	11.	
4.Asbestos	8.Concrete	12.	
Roof Surface	**1 Asphalt Shingles**		
1.Asphalt	4.Composit	7.	
2.Slate	5.Wood	8.	
3.Metal	6.Other	9.	
SF Masonry Trim	**0**		
OPEN-3-CUSTOM	**0**		
OPEN-4-CUSTOM	**0**		
Year Built	**1880**		
Year Remodeled	**1990**		
Foundation	**1 Concrete**		
1.Concrete	4.Wood	7.	
2.C Block	5.Slab	8.	
3.Br/Stone	6.Piers	9.	
Basement	**4 Full Basement**		
1.1/4 Bmt	4.Full Bmt	7.	
2.1/2 Bmt	5.None	8.	
3.3/4 Bmt	6.	9.None	
Bsmt Gar # Cars	**0**		
Wet Basement	**2 Damp Basement**		
1.Dry	4.	7.	
2.Damp	5.	8.	
3.Wet	6.	9.	

SF Bsmt Living	**0**		
Fin Bsmt Grade	**0 0**		
OPEN 5 OPTIONAL	**0**		
Heat Type	**100%**	**1 Hot Water BB**	
1.HWBB	5.FWA	9.No Heat	
2.HWCI	6.GravWA	10.	
3.H Pump	7.Electric	11.	
4.Steam	8.Fl/Wall	12.	
Cool Type	**0%**	**9 None**	
1.Refrig	4.W&C Air	7.	
2.Evapor	5.	8.	
3.H Pump	6.	9.None	
Kitchen Style	**2 Typical**		
1.Modern	4.Obsolete	7.	
2.Typical	5.	8.	
3.Old Type	6.	9.None	
Bath(s) Style	**2 Typical Bath(s)**		
1.Modern	4.Obsolete	7.	
2.Typical	5.	8.	
3.Old Type	6.	9.None	
# Rooms	**6**		
# Bedrooms	**4**		
# Full Baths	**1**		
# Half Baths	**1**		
# Addn Fixtures	**0**		
# Fireplaces	**0**		

TRIO Software
A Division of Harris Computer Systems

Layout	**1 Typical**		
1.Typical	4.	7.	
2.Inadeq	5.	8.	
3.Poor	6.	9.	
Attic	**9 None**		
1.1/4 Fin	4.Full Fin	7.	
2.1/2 Fin	5.Fl/Stair	8.	
3.3/4 Fin	6.	9.None	
Insulation	**1 Full**		
1.Full	4.Minimal	7.	
2.Heavy	5.Partial	8.	
3.Capped	6.	9.None	
Unfinished %	**0%**		
Grade & Factor	**2 Fair 110%**		
1.E Grade	4.B Grade	7.	
2.D Grade	5.A Grade	8.SC Grade	
3.C Grade	6.AA Grade	9.Same	
SQFT (Footprint)	**834**		
Condition	**5 Above Average**		
1.Poor	4.Avg	7.V G	
2.Fair	5.Avg+	8.Exc	
3.Avg-	6.Good	9.Same	
Phys. % Good	**0%**		
Funct. % Good	**100%**		
Functional Code	**9 None**		
1.Incomp	4.Delap	7.No Power	
2.O-Built	5.Bsmt	8.LongTerm	
3.Damage	6.Common	9.None	
Econ. % Good	**100%**		
Economic Code	**None**		
0.None	3.No Power	7.	
1.Location	4.Generate	8.	
2.Encroach	9.None	9.	
Entrance Code	**3 Information Only**		
1.Interior	4.Vacant	7.	
2.Refusal	5.Estimate	8.	
3.Informed	6.Reviewed	9.	
Information Code	**1 Owner**		
1.Owner	4.Agent	7.	
2.Relative	5.Estimate	8.	
3.Tenant	6.Other	9.	

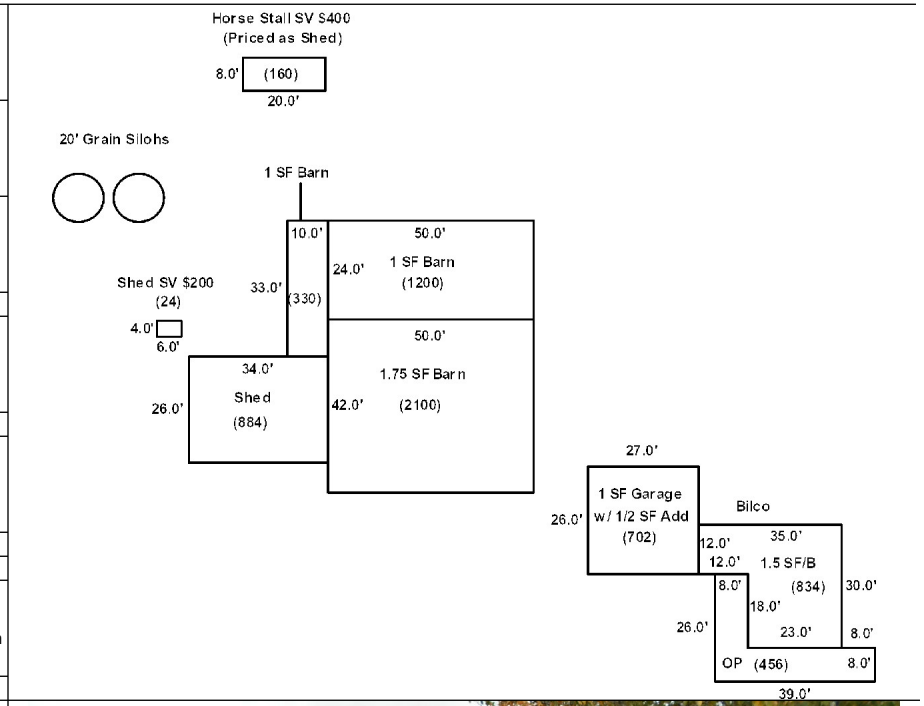

Date Inspected 9/23/2018

Additions, Outbuildings & Improvements

Type	Year	Units	Grade	Cond	Phys.	Funct.	Sound Value
505 Silo 20 Base/Hi	1900				%	%	1,500
505 Silo 20 Base/Hi	1900				%	%	1,500
24 Frame Shed	0				%	%	400
24 Frame Shed	0				%	%	200
24 Frame Shed	1900	884	2 100	3	0 %	80 %	
59 Barn	1900	330	2 100	3	0 %	100 %	
59 Barn	1900	1200	2 105	4	0 %	85 %	
60 2 Story Barn	1900	2100	2 105	4	0 %	85 %	
79 1/2S-Ad/Gar	2002	702	3 100	4	0 %	100 %	
21 Open Frame	1880	456	3 95	4	0 %	100 %	

1.One Story Fram
2.Two Story Fram
3.Three Story Fr
4.1 & 1/2 Story
5.1 & 3/4 Story
6.2 & 1/2 Story
21.Open Frame Por
22.Encl Frame Por
23.Frame Garage
24.Frame Shed
25.Frame Bay Wind
26.1SFr Overhang
27.Unfin Basement
28.Unfinished Att
29.Finished Attic

Map Lot 006-004A | Account 738 | Location 556 CROSS ROAD | Card 2 Of 2 | 11/18/2020

McCRUM, TROY D.
McCRUM, NICHOLE U.
556 CROSS ROAD

WASHBURN ME 04786
B3678P271 B5295P93 B5378P26

Property Data

Neighborhood **1 Neighborhood One**

Tree Growth Year **0**

1ST MORTGAGE **0**

2ND MORTGAGE **0**

Zone/Land Use **1 Residential**

Secondary Zone

Topography **1 Level**

1.Level	4.Below St	7.LevelBog
2.Rolling	5.Low	8.
3.Above St	6.Swampy	9.

Utilities **4 Drilled Well** **6 Septic System**

1.Public	4.Dr Well	7.Cesspool
2.Water	5.Dug Well	8.
3.Sewer	6.Septic	9.None

Street **1 Paved**

1.Paved	4.Proposed	7.
2.Semi Imp	5.R/O/W	8.
3.Gravel	6.	9.None

TG PLAN YEAR **0**

Tif District # **0**

Sale Data

Sale Date

Price

Sale Type

1.Land	4.Mobile	7.C/I L&B
2.L & B	5.Other	8.
3.Building	6.C/I Land	9.

Financing

1.Convent	4.Seller	7.
2.FHA/VA	5.Private	8.
3.Assumed	6.Cash	9.Unknown

Validity

1.Valid	4.Split	7.Renovate
2.Related	5.Partial	8.Other
3.Distress	6.Exempt	9.

Verified

1.Buyer	4.Agent	7.Family
2.Seller	5.Pub Rec	8.Other
3.Lender	6.MLS	9.

Assessment Record

Year	Land	Buildings	Exempt	Total
2020	0	118,000	0	118,000

Land Data

Front Foot	Type	Effective Frontage	Effective Depth	Influence Factor	Influence Code
11.Regular Lot				%	
12.Delta Triangle				%	
13.Nabla Triangle				%	
14.Rear Land				%	
15.Class I Road				%	
				%	
				%	
Square Foot		**Square Feet**			
16.Class II Road				%	
17.Municipal Rese				%	
18.Munic Sep Lago				%	
19.Gravel Pit				%	
20.Industrial Bas				%	
				%	
				%	
Fract. Acre		**Acreage/Sites**			
21.Developed Pave				%	
22.Undev Paved (F				%	
23.Developed Grav				%	
Acres				%	
24.Undev Gravel (				%	
25.Comm Base Pave				%	
26.Comm Base Grav				%	
27.Backlot				%	
28.Rear Land				%	
29.Pavement				%	

Total Acreage 0.00

Influence Codes

1.Unimproved
2.Excess Frtg
3.Topography
4.Size/Shape
5.Access
6.Restriction
7.Open Space
8.View/Environ
9.Fract Share
Acres
30.Utility R O W
31.Tillable
32.Pasture
33.Orchard
34.Softwood F&O
35.Mixed Wood F&O
36.Hardwood F&O
37.Softwood TG
38.Mixed Wood TG
39.Hardwood TG
40.Wasteland
41.Open Space
42.Mobile Home Si
43.Condo Site
44.Lot Improvemen
45.Subdivision Lo
46.Heavy Ind Sit

Inspection Witnessed By:

X Date

No./Date	Description	Date Insp.

Notes:

* Added Pole barn, MH with porch and garage for 2020. Pole barn assessed at 75% for being incomplete and size obs. Garage at 95% for being 1/4 attached. MH HUD # RAD 1539913.

Washburn

Washburn

Map Lot 006-004A | Account 738 | Location 556 CROSS ROAD | Card 2 Of 2 | 11/18/2020

Building Style		
1.Conv.	5.Garrison	9.Gambrel
2.Ranch	6.Salt Box	10.Other
3.R Ranch	7.Contemp	11.Split
4.Cape	8.Log	12.

Dwelling Units

Other Units

Stories		
1.1	4.1.5	7.
2.2	5.1.75	8.
3.3	6.2.5	9.

Exterior Walls		
1.Wood	5.Stucco	9.T-111
2.Vin/Al	6.Brick	10.Other
3.Compos.	7.Stone	11.
4.Asbestos	8.Concrete	12.

Roof Surface		
1.Asphalt	4.Composit	7.
2.Slate	5.Wood	8.
3.Metal	6.Other	9.

SF Masonry Trim

OPEN-3-CUSTOM

OPEN-4-CUSTOM

Year Built

Year Remodeled

Foundation		
1.Concrete	4.Wood	7.
2.C Block	5.Slab	8.
3.Br/Stone	6.Piers	9.

Basement		
1.1/4 Bmt	4.Full Bmt	7.
2.1/2 Bmt	5.None	8.
3.3/4 Bmt	6.	9.None

Bsmt Gar # Cars

Wet Basement		
1.Dry	4.	7.
2.Damp	5.	8.
3.Wet	6.	9.

SF Bsmt Living

Fin Bsmt Grade

OPEN 5 OPTIONAL

Heat Type **100%**		
1.HWBB	5.FWA	9.No Heat
2.HWCI	6.GravWA	10.
3.H Pump	7.Electric	11.
4.Steam	8.Fl/Wall	12.

Cool Type **0%**		
1.Refrig	4.W&C Air	7.
2.Evapor	5.	8.
3.H Pump	6.	9.None

Kitchen Style		
1.Modern	4.Obsolete	7.
2.Typical	5.	8.
3.Old Type	6.	9.None

Bath(s) Style		
1.Modern	4.Obsolete	7.
2.Typical	5.	8.
3.Old Type	6.	9.None

Rooms

Bedrooms

Full Baths

Half Baths

Addn Fixtures

Fireplaces

TRIO Software
A Division of Harris Computer Systems

Layout		
1.Typical	4.	7.
2.Inadeq	5.	8.
3.Poor	6.	9.

Attic		
1.1/4 Fin	4.Full Fin	7.
2.1/2 Fin	5.Fl/Stair	8.
3.3/4 Fin	6.	9.None

Insulation		
1.Full	4.Minimal	7.
2.Heavy	5.Partial	8.
3.Capped	6.	9.None

Unfinished %

Grade & Factor

1.E Grade	4.B Grade	7.
2.D Grade	5.A Grade	8.SC Grade
3.C Grade	6.AA Grade	9.Same

SQFT (Footprint)

Condition		
1.Poor	4.Avg	7.V G
2.Fair	5.Avg+	8.Exc
3.Avg-	6.Good	9.Same

Phys. % Good

Funct. % Good

Functional Code		
1.Incomp	4.Delap	7.No Power
2.O-Built	5.Bsmt	8.LongTerm
3.Damage	6.Common	9.None

Econ. % Good

Economic Code		
0.None	3.No Power	7.
1.Location	4.Generate	8.
2.Encroach	9.None	9.

Entrance Code **3 Information Only**		
1.Interior	4.Vacant	7.
2.Refusal	5.Estimate	8.
3.Informed	6.Reviewed	9.

Information Code **2 Relative**		
1.Owner	4.Agent	7.
2.Relative	5.Estimate	8.
3.Tenant	6.Other	9.

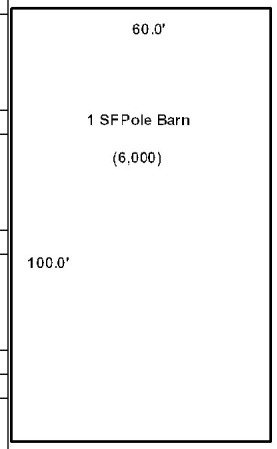

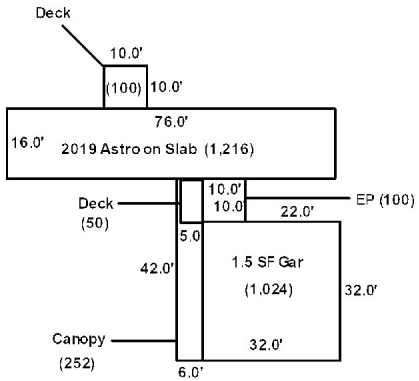

Date Inspected 7/01/2020

Additions, Outbuildings & Improvements

Type	Year	Units	Grade	Cond	Phys.	Funct.	Sound Value
712 Astro M/H	2019	16x76	3 100	4	0 %	100 %	
48 Concrete Slab	2019	1216	3 100	4	0 %	100 %	
68 Wood Deck	2020	100	3 100	4	0 %	50 %	
68 Wood Deck	2020	50	3 100	4	0 %	100 %	
22 Encl Frame Porch	2020	100	3 100	4	0 %	100 %	
82 1.5 S-Gar	2020	1024	3 105	4	0 %	95 %	
61 Canopy	2020	252	3 100	4	0 %	100 %	
87 Pole Barn	2019	6000	3 100	4	0 %	75 %	
					%	%	
					%	%	

1.One Story Fram
2.Two Story Fram
3.Three Story Fr
4.1 & 1/2 Story
5.1 & 3/4 Story
6.2 & 1/2 Story
21.Open Frame Por
22.Encl Frame Por
23.Frame Garage
24.Frame Shed
25.Frame Bay Wind
26.1SFr Overhang
27.Unfin Basement
28.Unfinished Att
29.Finished Attic

Map Lot 006-004B | Account 1125 | Location CROSS ROAD | Card 1 Of 1 | 11/18/2020

FLEWELLING, FREDERIC N.
FLEWELLING, PATSY A.
P.O. BOX 398

CROUSEVILLE ME 04738
B5292P310 B5292P314

Property Data

Neighborhood **1 Neighborhood One**

Tree Growth Year **0**

1ST MORTGAGE **0**

2ND MORTGAGE **0**

Zone/Land Use **1 Residential**

Secondary Zone

Topography **1 Level**

1.Level	4.Below St	7.LevelBog
2.Rolling	5.Low	8.
3.Above St	6.Swampy	9.

Utilities

1.Public	4.Dr Well	7.Cesspool
2.Water	5.Dug Well	8.
3.Sewer	6.Septic	9.None

Street **1 Paved**

1.Paved	4.Proposed	7.
2.Semi Imp	5.R/O/W	8.
3.Gravel	6.	9.None

TG PLAN YEAR **0**

Tif District # **0**

Sale Data

Sale Date **4/17/2014**

Price

Sale Type **1 Land Only**

1.Land	4.Mobile	7.C/I L&B
2.L & B	5.Other	8.
3.Building	6.C/I Land	9.

Financing **1 Conventional**

1.Convent	4.Seller	7.
2.FHA/VA	5.Private	8.
3.Assumed	6.Cash	9.Unknown

Validity **2 Related Parties**

1.Valid	4.Split	7.Renovate
2.Related	5.Partial	8.Other
3.Distress	6.Exempt	9.

Verified **5 Public Record**

1.Buyer	4.Agent	7.Family
2.Seller	5.Pub Rec	8.Other
3.Lender	6.MLS	9.

Assessment Record

Year	Land	Buildings	Exempt	Total
2015	16,100	0	0	16,100
2018	16,100	0	0	16,100
2019	31,000	0	0	31,000
2020	31,000	0	0	31,000

Land Data

Front Foot	Type	Effective Frontage	Effective Depth	Influence Factor	Influence Code
11.Regular Lot				%	
12.Delta Triangle				%	
13.Nabla Triangle				%	
14.Rear Land				%	
15.Class I Road				%	
				%	
				%	
Square Foot		**Square Feet**			
16.Class II Road				%	
17.Municipal Rese				%	
18.Munic Sep Lago				%	
19.Gravel Pit				%	
20.Industrial Bas				%	
				%	
				%	
Fract. Acre		**Acreage/Sites**			
21.Developed Pave	31	31.00		100 %	0
22.Undev Paved (F				%	
23.Developed Grav				%	
Acres				%	
24.Undev Gravel (				%	
25.Comm Base Pave				%	
26.Comm Base Grav				%	
27.Backlot				%	
28.Rear Land				%	
29.Pavement				%	

Total Acreage 31.00

Influence Codes

1.Unimproved
2.Excess Frtg
3.Topography
4.Size/Shape
5.Access
6.Restriction
7.Open Space
8.View/Environ
9.Fract Share
Acres
30.Utility R O W
31.Tillable
32.Pasture
33.Orchard
34.Softwood F&O
35.Mixed Wood F&O
36.Hardwood F&O
37.Softwood TG
38.Mixed Wood TG
39.Hardwood TG
40.Wasteland
41.Open Space
42.Mobile Home Si
43.Condo Site
44.Lot Improvemen
45.Subdivision Lo
46.Heavy Ind Sit

Inspection Witnessed By:

X Date

No./Date	Description	Date Insp.

Notes:

Washburn

Washburn

Map Lot 006-004B | Account 1125 | Location CROSS ROAD | Card 1 Of 1 | 11/18/2020

Building Style **0**		
1.Conv.	5.Garrison	9.Gambrel
2.Ranch	6.Salt Box	10.Other
3.R Ranch	7.Contemp	11.Split
4.Cape	8.Log	12.
Dwelling Units **0**		
Other Units **0**		
Stories **0**		
1.1	4.1.5	7.
2.2	5.1.75	8.
3.3	6.2.5	9.
Exterior Walls **0**		
1.Wood	5.Stucco	9.T-111
2.Vin/Al	6.Brick	10.Other
3.Compos.	7.Stone	11.
4.Asbestos	8.Concrete	12.
Roof Surface **0**		
1.Asphalt	4.Composit	7.
2.Slate	5.Wood	8.
3.Metal	6.Other	9.
SF Masonry Trim **0**		
OPEN-3-CUSTOM **0**		
OPEN-4-CUSTOM **0**		
Year Built **0**		
Year Remodeled **0**		
Foundation **0**		
1.Concrete	4.Wood	7.
2.C Block	5.Slab	8.
3.Br/Stone	6.Piers	9.
Basement **0**		
1.1/4 Bmt	4.Full Bmt	7.
2.1/2 Bmt	5.None	8.
3.3/4 Bmt	6.	9.None
Bsmt Gar # Cars **0**		
Wet Basement **0**		
1.Dry	4.	7.
2.Damp	5.	8.
3.Wet	6.	9.

SF Bsmt Living **0**		
Fin Bsmt Grade **0 0**		
OPEN 5 OPTIONAL **0**		
Heat Type **100%** **0**		
1.HWBB	5.FWA	9.No Heat
2.HWCI	6.GravWA	10.
3.H Pump	7.Electric	11.
4.Steam	8.Fl/Wall	12.
Cool Type **0%** **9 None**		
1.Refrig	4.W&C Air	7.
2.Evapor	5.	8.
3.H Pump	6.	9.None
Kitchen Style **0**		
1.Modern	4.Obsolete	7.
2.Typical	5.	8.
3.Old Type	6.	9.None
Bath(s) Style **0**		
1.Modern	4.Obsolete	7.
2.Typical	5.	8.
3.Old Type	6.	9.None
# Rooms **0**		
# Bedrooms **0**		
# Full Baths **0**		
# Half Baths **0**		
# Addn Fixtures **0**		
# Fireplaces **0**		

TRIO Software
A Division of Harris Computer Systems

Layout **0**		
1.Typical	4.	7.
2.Inadeq	5.	8.
3.Poor	6.	9.
Attic **0**		
1.1/4 Fin	4.Full Fin	7.
2.1/2 Fin	5.Fl/Stair	8.
3.3/4 Fin	6.	9.None
Insulation **0**		
1.Full	4.Minimal	7.
2.Heavy	5.Partial	8.
3.Capped	6.	9.None
Unfinished % **0%**		
Grade & Factor **0 0%**		
1.E Grade	4.B Grade	7.
2.D Grade	5.A Grade	8.SC Grade
3.C Grade	6.AA Grade	9.Same
SQFT (Footprint) **0**		
Condition **0**		
1.Poor	4.Avg	7.V G
2.Fair	5.Avg+	8.Exc
3.Avg-	6.Good	9.Same
Phys. % Good **0%**		
Funct. % Good **100%**		
Functional Code **9 None**		
1.Incomp	4.Delap	7.No Power
2.O-Built	5.Bsmt	8.LongTerm
3.Damage	6.Common	9.None
Econ. % Good **100%**		
Economic Code **None**		
0.None	3.No Power	7.
1.Location	4.Generate	8.
2.Encroach	9.None	9.
Entrance Code **0**		
1.Interior	4.Vacant	7.
2.Refusal	5.Estimate	8.
3.Informed	6.Reviewed	9.
Information Code **0**		
1.Owner	4.Agent	7.
2.Relative	5.Estimate	8.
3.Tenant	6.Other	9.

Date Inspected

Additions, Outbuildings & Improvements

Type	Year	Units	Grade	Cond	Phys.	Funct.	Sound Value
					%	%	
					%	%	
					%	%	
					%	%	
					%	%	
					%	%	
					%	%	
					%	%	
					%	%	
					%	%	

1.One Story Fram
2.Two Story Fram
3.Three Story Fr
4.1 & 1/2 Story
5.1 & 3/4 Story
6.2 & 1/2 Story
21.Open Frame Por
22.Encl Frame Por
23.Frame Garage
24.Frame Shed
25.Frame Bay Wind
26.1SFr Overhang
27.Unfin Basement
28.Unfinished Att
29.Finished Attic

Map Lot 006-005 Account 990 Location CROSS ROAD Card 1 Of 1 11/18/2020

UMPHREY, MICHAEL
UMPHREY, LYNN
557 CROSS ROAD

WASHBURN ME 04786
B2550P17

Property Data

Neighborhood **1 Neighborhood One**

Tree Growth Year **0**

1ST MORTGAGE **0**

2ND MORTGAGE **0**

Zone/Land Use **1 Residential**

Secondary Zone

Topography **1 Level**

1.Level	4.Below St	7.LevelBog
2.Rolling	5.Low	8.
3.Above St	6.Swampy	9.

Utilities

1.Public	4.Dr Well	7.Cesspool
2.Water	5.Dug Well	8.
3.Sewer	6.Septic	9.None

Street **1 Paved**

1.Paved	4.Proposed	7.
2.Semi Imp	5.R/O/W	8.
3.Gravel	6.	9.None

TG PLAN YEAR **0**

Tif District # **0**

Sale Data

Sale Date **3/31/1993**

Price **12,400**

Sale Type **1 Land Only**

1.Land	4.Mobile	7.C/I L&B
2.L & B	5.Other	8.
3.Building	6.C/I Land	9.

Financing

1.Convent	4.Seller	7.
2.FHA/VA	5.Private	8.
3.Assumed	6.Cash	9.Unknown

Validity **1 Arms Length Sale**

1.Valid	4.Split	7.Renovate
2.Related	5.Partial	8.Other
3.Distress	6.Exempt	9.

Verified **5 Public Record**

1.Buyer	4.Agent	7.Family
2.Seller	5.Pub Rec	8.Other
3.Lender	6.MLS	9.

Assessment Record

Year	Land	Buildings	Exempt	Total
2007	20,500	0	0	20,500
2008	20,500	0	0	20,500
2009	20,500	0	0	20,500
2012	20,500	0	0	20,500
2013	26,700	0	0	26,700
2015	26,700	0	0	26,700
2018	10,100	0	0	10,100
2019	11,100	0	0	11,100
2020	11,100	0	0	11,100

Land Data

Front Foot	Type	Effective Frontage	Effective Depth	Influence Factor	Influence Code
11.Regular Lot				%	
12.Delta Triangle				%	
13.Nabla Triangle				%	
14.Rear Land				%	
15.Class I Road				%	
				%	
				%	
Square Foot		**Square Feet**			
16.Class II Road				%	
17.Municipal Rese				%	
18.Munic Sep Lago				%	
19.Gravel Pit				%	
20.Industrial Bas				%	
				%	
				%	
Fract. Acre		**Acreage/Sites**			
21.Developed Pave	22	1.00	100	%	0
22.Undev Paved (F	31	2.12	100	%	0
23.Developed Grav				%	
Acres				%	
24.Undev Gravel (				%	
25.Comm Base Pave				%	
26.Comm Base Grav				%	
27.Backlot				%	
28.Rear Land				%	
29.Pavement				%	

Total Acreage 3.12

Influence Codes

1.Unimproved
2.Excess Frtg
3.Topography
4.Size/Shape
5.Access
6.Restriction
7.Open Space
8.View/Environ
9.Fract Share
Acres
30.Utility R O W
31.Tillable
32.Pasture
33.Orchard
34.Softwood F&O
35.Mixed Wood F&O
36.Hardwood F&O
37.Softwood TG
38.Mixed Wood TG
39.Hardwood TG
40.Wasteland
41.Open Space
42.Mobile Home Si
43.Condo Site
44.Lot Improvemen
45.Subdivision Lo
46.Heavy Ind Sit

Inspection Witnessed By:

X Date

No./Date	Description	Date Insp.

Notes:

Washburn

Washburn

Map Lot 006-005 | Account 990 | Location CROSS ROAD | Card 1 Of 1 | 11/18/2020

Building Style **0**		
1.Conv.	5.Garrison	9.Gambrel
2.Ranch	6.Salt Box	10.Other
3.R Ranch	7.Contemp	11.Split
4.Cape	8.Log	12.
Dwelling Units **0**		
Other Units **0**		
Stories **0**		
1.1	4.1.5	7.
2.2	5.1.75	8.
3.3	6.2.5	9.
Exterior Walls **0**		
1.Wood	5.Stucco	9.T-111
2.Vin/Al	6.Brick	10.Other
3.Compos.	7.Stone	11.
4.Asbestos	8.Concrete	12.
Roof Surface **0**		
1.Asphalt	4.Composit	7.
2.Slate	5.Wood	8.
3.Metal	6.Other	9.
SF Masonry Trim **0**		
OPEN-3-CUSTOM **0**		
OPEN-4-CUSTOM **0**		
Year Built **0**		
Year Remodeled **0**		
Foundation **0**		
1.Concrete	4.Wood	7.
2.C Block	5.Slab	8.
3.Br/Stone	6.Piers	9.
Basement **0**		
1.1/4 Bmt	4.Full Bmt	7.
2.1/2 Bmt	5.None	8.
3.3/4 Bmt	6.	9.None
Bsmt Gar # Cars **0**		
Wet Basement **0**		
1.Dry	4.	7.
2.Damp	5.	8.
3.Wet	6.	9.

SF Bsmt Living **0**		
Fin Bsmt Grade **0 0**		
OPEN 5 OPTIONAL **0**		
Heat Type **100%** **0**		
1.HWBB	5.FWA	9.No Heat
2.HWCI	6.GravWA	10.
3.H Pump	7.Electric	11.
4.Steam	8.Fl/Wall	12.
Cool Type **0%** **9 None**		
1.Refrig	4.W&C Air	7.
2.Evapor	5.	8.
3.H Pump	6.	9.None
Kitchen Style **0**		
1.Modern	4.Obsolete	7.
2.Typical	5.	8.
3.Old Type	6.	9.None
Bath(s) Style **0**		
1.Modern	4.Obsolete	7.
2.Typical	5.	8.
3.Old Type	6.	9.None
# Rooms **0**		
# Bedrooms **0**		
# Full Baths **0**		
# Half Baths **0**		
# Addn Fixtures **0**		
# Fireplaces **0**		

TRIO Software
A Division of Harris Computer Systems

Layout **0**		
1.Typical	4.	7.
2.Inadeq	5.	8.
3.Poor	6.	9.
Attic **0**		
1.1/4 Fin	4.Full Fin	7.
2.1/2 Fin	5.Fl/Stair	8.
3.3/4 Fin	6.	9.None
Insulation **0**		
1.Full	4.Minimal	7.
2.Heavy	5.Partial	8.
3.Capped	6.	9.None
Unfinished % **0%**		
Grade & Factor **0 0%**		
1.E Grade	4.B Grade	7.
2.D Grade	5.A Grade	8.SC Grade
3.C Grade	6.AA Grade	9.Same
SQFT (Footprint) **0**		
Condition **0**		
1.Poor	4.Avg	7.V G
2.Fair	5.Avg+	8.Exc
3.Avg-	6.Good	9.Same
Phys. % Good **0%**		
Funct. % Good **100%**		
Functional Code **9 None**		
1.Incomp	4.Delap	7.No Power
2.O-Built	5.Bsmt	8.LongTerm
3.Damage	6.Common	9.None
Econ. % Good **100%**		
Economic Code **None**		
0.None	3.No Power	7.
1.Location	4.Generate	8.
2.Encroach	9.None	9.
Entrance Code **0**		
1.Interior	4.Vacant	7.
2.Refusal	5.Estimate	8.
3.Informed	6.Reviewed	9.
Information Code **0**		
1.Owner	4.Agent	7.
2.Relative	5.Estimate	8.
3.Tenant	6.Other	9.

Date Inspected

Additions, Outbuildings & Improvements

Type	Year	Units	Grade	Cond	Phys.	Funct.	Sound Value
					%	%	
					%	%	
					%	%	
					%	%	
					%	%	
					%	%	
					%	%	
					%	%	
					%	%	
					%	%	

1.One Story Fram
2.Two Story Fram
3.Three Story Fr
4.1 & 1/2 Story
5.1 & 3/4 Story
6.2 & 1/2 Story
21.Open Frame Por
22.Encl Frame Por
23.Frame Garage
24.Frame Shed
25.Frame Bay Wind
26.1SFr Overhang
27.Unfin Basement
28.Unfinished Att
29.Finished Attic

Map Lot 006-005/ON | Account 987 | Location 600 CROSS ROAD | Card 1 Of 1 | 11/18/2020

UMPHREY, JASPER
UMPHREY, ELIZABETH
UMPHREY, HOLLIE
600 CROSS ROAD
WASHBURN ME 04786
B4026P157

Inspection Witnessed By:

X Date

No./Date	Description	Date Insp.

Notes:

Washburn

Property Data

Neighborhood **1 Neighborhood One**

Tree Growth Year **0**

1ST MORTGAGE **0**

2ND MORTGAGE **0**

Zone/Land Use **1 Residential**

Secondary Zone

Topography **1 Level**

1.Level	4.Below St	7.LevelBog
2.Rolling	5.Low	8.
3.Above St	6.Swampy	9.

Utilities **4 Drilled Well** **6 Septic System**

1.Public	4.Dr Well	7.Cesspool
2.Water	5.Dug Well	8.
3.Sewer	6.Septic	9.None

Street **1 Paved**

1.Paved	4.Proposed	7.
2.Semi Imp	5.R/O/W	8.
3.Gravel	6.	9.None

TG PLAN YEAR **0**

Tif District # **0**

Sale Data

Sale Date

Price

Sale Type **4 Mobile Home**

1.Land	4.Mobile	7.C/I L&B
2.L & B	5.Other	8.
3.Building	6.C/I Land	9.

Financing

1.Convent	4.Seller	7.
2.FHA/VA	5.Private	8.
3.Assumed	6.Cash	9.Unknown

Validity **2 Related Parties**

1.Valid	4.Split	7.Renovate
2.Related	5.Partial	8.Other
3.Distress	6.Exempt	9.

Verified **5 Public Record**

1.Buyer	4.Agent	7.Family
2.Seller	5.Pub Rec	8.Other
3.Lender	6.MLS	9.

Assessment Record

Year	Land	Buildings	Exempt	Total
2007	0	43,800	18,000	25,800
2008	0	43,800	19,000	24,800
2009	0	43,800	14,400	29,400
2012	0	43,800	14,080	29,720
2013	0	43,800	14,080	29,720
2015	0	43,800	14,400	29,400
2018	0	49,800	23,920	25,880
2019	0	24,300	24,300	0
2020	0	24,200	24,200	0

Land Data

Front Foot	Type	Effective Frontage	Effective Depth	Influence Factor	Influence Code
11.Regular Lot				%	
12.Delta Triangle				%	
13.Nabla Triangle				%	
14.Rear Land				%	
15.Class I Road				%	
				%	
				%	
Square Foot		**Square Feet**			
16.Class II Road				%	
17.Municipal Rese				%	
18.Munic Sep Lago				%	
19.Gravel Pit				%	
20.Industrial Bas				%	
				%	
				%	
Fract. Acre		**Acreage/Sites**			
21.Developed Pave				%	
22.Undev Paved (F				%	
23.Developed Grav				%	
Acres				%	
24.Undev Gravel (				%	
25.Comm Base Pave				%	
26.Comm Base Grav				%	
27.Backlot				%	
28.Rear Land					
29.Pavement					

Total Acreage 0.00

Influence Codes

1.Unimproved
2.Excess Frtg
3.Topography
4.Size/Shape
5.Access
6.Restriction
7.Open Space
8.View/Environ
9.Fract Share

Acres

30.Utility R O W
31.Tillable
32.Pasture
33.Orchard
34.Softwood F&O
35.Mixed Wood F&O
36.Hardwood F&O
37.Softwood TG
38.Mixed Wood TG
39.Hardwood TG
40.Wasteland
41.Open Space
42.Mobile Home Si
43.Condo Site
44.Lot Improvemen
45.Subdivision Lo
46.Heavy Ind Sit

Washburn

Map Lot 006-005/ON | Account 987 | Location 600 CROSS ROAD | Card 1 Of 1 | 11/18/2020

Building Style **0**		
1.Conv.	5.Garrison	9.Gambrel
2.Ranch	6.Salt Box	10.Other
3.R Ranch	7.Contemp	11.Split
4.Cape	8.Log	12.
Dwelling Units **0**		
Other Units **0**		
Stories **0**		
1.1	4.1.5	7.
2.2	5.1.75	8.
3.3	6.2.5	9.
Exterior Walls **0**		
1.Wood	5.Stucco	9.T-111
2.Vin/Al	6.Brick	10.Other
3.Compos.	7.Stone	11.
4.Asbestos	8.Concrete	12.
Roof Surface **0**		
1.Asphalt	4.Composit	7.
2.Slate	5.Wood	8.
3.Metal	6.Other	9.
SF Masonry Trim **0**		
OPEN-3-CUSTOM **0**		
OPEN-4-CUSTOM **0**		
Year Built **0**		
Year Remodeled **0**		
Foundation **0**		
1.Concrete	4.Wood	7.
2.C Block	5.Slab	8.
3.Br/Stone	6.Piers	9.
Basement **0**		
1.1/4 Bmt	4.Full Bmt	7.
2.1/2 Bmt	5.None	8.
3.3/4 Bmt	6.	9.None
Bsmt Gar # Cars **0**		
Wet Basement **0**		
1.Dry	4.	7.
2.Damp	5.	8.
3.Wet	6.	9.

SF Bsmt Living **0**		
Fin Bsmt Grade **0 0**		
OPEN 5 OPTIONAL **0**		
Heat Type **100%** **0**		
1.HWBB	5.FWA	9.No Heat
2.HWCI	6.GravWA	10.
3.H Pump	7.Electric	11.
4.Steam	8.Fl/Wall	12.
Cool Type **0%** **9 None**		
1.Refrig	4.W&C Air	7.
2.Evapor	5.	8.
3.H Pump	6.	9.None
Kitchen Style **0**		
1.Modern	4.Obsolete	7.
2.Typical	5.	8.
3.Old Type	6.	9.None
Bath(s) Style **0**		
1.Modern	4.Obsolete	7.
2.Typical	5.	8.
3.Old Type	6.	9.None
# Rooms **0**		
# Bedrooms **0**		
# Full Baths **0**		
# Half Baths **0**		
# Addn Fixtures **0**		
# Fireplaces **0**		

TRIO Software
A Division of Harris Computer Systems

Layout **0**		
1.Typical	4.	7.
2.Inadeq	5.	8.
3.Poor	6.	9.
Attic **0**		
1.1/4 Fin	4.Full Fin	7.
2.1/2 Fin	5.Fl/Stair	8.
3.3/4 Fin	6.	9.None
Insulation **0**		
1.Full	4.Minimal	7.
2.Heavy	5.Partial	8.
3.Capped	6.	9.None
Unfinished % **0%**		
Grade & Factor **0 0%**		
1.E Grade	4.B Grade	7.
2.D Grade	5.A Grade	8.SC Grade
3.C Grade	6.AA Grade	9.Same
SQFT (Footprint) **0**		
Condition **0**		
1.Poor	4.Avg	7.V G
2.Fair	5.Avg+	8.Exc
3.Avg-	6.Good	9.Same
Phys. % Good **0%**		
Funct. % Good **100%**		
Functional Code **9 None**		
1.Incomp	4.Delap	7.No Power
2.O-Built	5.Bsmt	8.LongTerm
3.Damage	6.Common	9.None
Econ. % Good **100%**		
Economic Code **None**		
0.None	3.No Power	7.
1.Location	4.Generate	8.
2.Encroach	9.None	9.
Entrance Code **5 Estimated**		
1.Interior	4.Vacant	7.
2.Refusal	5.Estimate	8.
3.Informed	6.Reviewed	9.
Information Code **5 Estimate**		
1.Owner	4.Agent	7.
2.Relative	5.Estimate	8.
3.Tenant	6.Other	9.

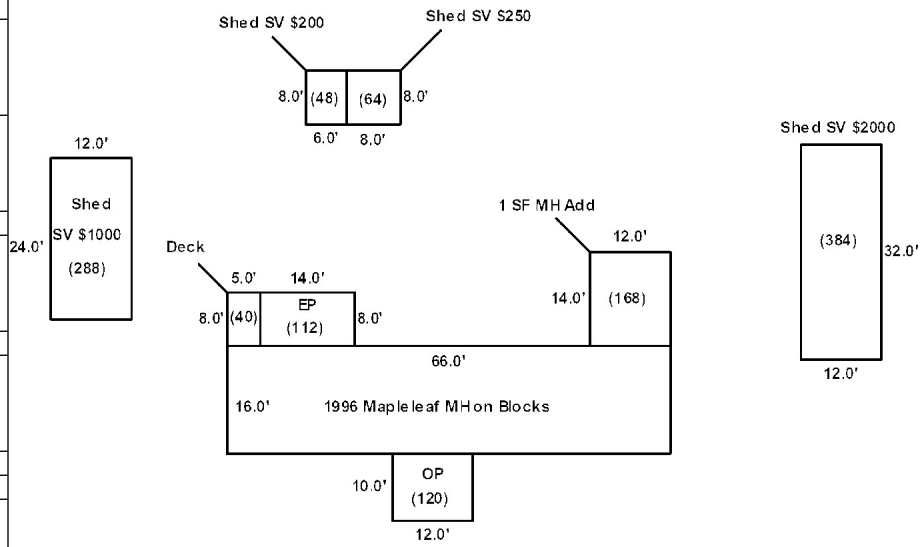

Date Inspected 9/23/2018

Additions, Outbuildings & Improvements

Type	Year	Units	Grade	Cond	Phys.	Funct.	Sound Value
847 Maple Leaf	1996	16x66	4 100	6	0 %	100 %	
21 Open Frame	2000	120	3 95	4	0 %	100 %	
18 1 S-MH add	2015	168	3 95	4	0 %	100 %	
22 Encl Frame Porch	2000	112	3 90	4	0 %	100 %	
68 Wood Deck	2000	40	3 100	4	0 %	100 %	
24 Frame Shed	0				%	%	1,000
24 Frame Shed	0				%	%	200
24 Frame Shed	0				%	%	250
24 Frame Shed	0				%	%	2,000
					%	%	

1.One Story Fram
2.Two Story Fram
3.Three Story Fr
4.1 & 1/2 Story
5.1 & 3/4 Story
6.2 & 1/2 Story
21.Open Frame Por
22.Encl Frame Por
23.Frame Garage
24.Frame Shed
25.Frame Bay Wind
26.1SFr Overhang
27.Unfin Basement
28.Unfinished Att
29.Finished Attic

Map Lot 006-005A | Account 1124 | Location CROSS ROAD | Card 1 Of 1 | 11/18/2020

FLEWELLING, FREDERIC N.
FLEWELLING, PATSY A.
P.O. BOX 398

CROUSEVILLE ME 04738
B5292P310 B5292P314

Property Data

Neighborhood **1 Neighborhood One**

Tree Growth Year **0**

1ST MORTGAGE **0**

2ND MORTGAGE **0**

Zone/Land Use **1 Residential**

Secondary Zone

Topography **1 Level**

1.Level	4.Below St	7.LevelBog
2.Rolling	5.Low	8.
3.Above St	6.Swampy	9.

Utilities

1.Public	4.Dr Well	7.Cesspool
2.Water	5.Dug Well	8.
3.Sewer	6.Septic	9.None

Street **1 Paved**

1.Paved	4.Proposed	7.
2.Semi Imp	5.R/O/W	8.
3.Gravel	6.	9.None

TG PLAN YEAR **0**

Tif District # **0**

Sale Data

Sale Date **4/17/2014**

Price

Sale Type **1 Land Only**

1.Land	4.Mobile	7.C/I L&B
2.L & B	5.Other	8.
3.Building	6.C/I Land	9.

Financing **1 Conventional**

1.Convent	4.Seller	7.
2.FHA/VA	5.Private	8.
3.Assumed	6.Cash	9.Unknown

Validity **2 Related Parties**

1.Valid	4.Split	7.Renovate
2.Related	5.Partial	8.Other
3.Distress	6.Exempt	9.

Verified **5 Public Record**

1.Buyer	4.Agent	7.Family
2.Seller	5.Pub Rec	8.Other
3.Lender	6.MLS	9.

Assessment Record

Year	Land	Buildings	Exempt	Total
2015	15,600	0	0	15,600
2018	15,600	0	0	15,600
2019	27,000	0	0	27,000
2020	27,000	0	0	27,000

Land Data

Front Foot	Type	Effective Frontage	Effective Depth	Influence Factor	Influence Code
11.Regular Lot				%	
12.Delta Triangle				%	
13.Nabla Triangle				%	
14.Rear Land				%	
15.Class I Road				%	
				%	
				%	
Square Foot		**Square Feet**			
16.Class II Road				%	
17.Municipal Rese				%	
18.Munic Sep Lago				%	
19.Gravel Pit				%	
20.Industrial Bas				%	
				%	
				%	
Fract. Acre		**Acreage/Sites**			
21.Developed Pave	31	24.00	100	%	0
22.Undev Paved (F	28	6.00	100	%	0
23.Developed Grav				%	
Acres				%	
24.Undev Gravel (				%	
25.Comm Base Pave				%	
26.Comm Base Grav				%	
27.Backlot				%	
28.Rear Land				%	
29.Pavement				%	

Total Acreage 30.00

Influence Codes

1.Unimproved
2.Excess Frtg
3.Topography
4.Size/Shape
5.Access
6.Restriction
7.Open Space
8.View/Environ
9.Fract Share
Acres
30.Utility R O W
31.Tillable
32.Pasture
33.Orchard
34.Softwood F&O
35.Mixed Wood F&O
36.Hardwood F&O
37.Softwood TG
38.Mixed Wood TG
39.Hardwood TG
40.Wasteland
41.Open Space
42.Mobile Home Si
43.Condo Site
44.Lot Improvemen
45.Subdivision Lo
46.Heavy Ind Sit

Inspection Witnessed By:

X Date

No./Date	Description	Date Insp.

Notes:

Washburn

Washburn

Map Lot 006-005A | Account 1124 | Location CROSS ROAD | Card 1 Of 1 | 11/18/2020

Building Style **0**		
1.Conv.	5.Garrison	9.Gambrel
2.Ranch	6.Salt Box	10.Other
3.R Ranch	7.Contemp	11.Split
4.Cape	8.Log	12.
Dwelling Units **0**		
Other Units **0**		
Stories **0**		
1.1	4.1.5	7.
2.2	5.1.75	8.
3.3	6.2.5	9.
Exterior Walls **0**		
1.Wood	5.Stucco	9.T-111
2.Vin/Al	6.Brick	10.Other
3.Compos.	7.Stone	11.
4.Asbestos	8.Concrete	12.
Roof Surface **0**		
1.Asphalt	4.Composit	7.
2.Slate	5.Wood	8.
3.Metal	6.Other	9.
SF Masonry Trim **0**		
OPEN-3-CUSTOM **0**		
OPEN-4-CUSTOM **0**		
Year Built **0**		
Year Remodeled **0**		
Foundation **0**		
1.Concrete	4.Wood	7.
2.C Block	5.Slab	8.
3.Br/Stone	6.Piers	9.
Basement **0**		
1.1/4 Bmt	4.Full Bmt	7.
2.1/2 Bmt	5.None	8.
3.3/4 Bmt	6.	9.None
Bsmt Gar # Cars **0**		
Wet Basement **0**		
1.Dry	4.	7.
2.Damp	5.	8.
3.Wet	6.	9.

SF Bsmt Living **0**		
Fin Bsmt Grade **0 0**		
OPEN 5 OPTIONAL **0**		
Heat Type **100%** **0**		
1.HWBB	5.FWA	9.No Heat
2.HWCI	6.GravWA	10.
3.H Pump	7.Electric	11.
4.Steam	8.Fl/Wall	12.
Cool Type **0%** **9 None**		
1.Refrig	4.W&C Air	7.
2.Evapor	5.	8.
3.H Pump	6.	9.None
Kitchen Style **0**		
1.Modern	4.Obsolete	7.
2.Typical	5.	8.
3.Old Type	6.	9.None
Bath(s) Style **0**		
1.Modern	4.Obsolete	7.
2.Typical	5.	8.
3.Old Type	6.	9.None
# Rooms **0**		
# Bedrooms **0**		
# Full Baths **0**		
# Half Baths **0**		
# Addn Fixtures **0**		
# Fireplaces **0**		

TRIO Software
A Division of Harris Computer Systems

Layout **0**		
1.Typical	4.	7.
2.Inadeq	5.	8.
3.Poor	6.	9.
Attic **0**		
1.1/4 Fin	4.Full Fin	7.
2.1/2 Fin	5.Fl/Stair	8.
3.3/4 Fin	6.	9.None
Insulation **0**		
1.Full	4.Minimal	7.
2.Heavy	5.Partial	8.
3.Capped	6.	9.None
Unfinished % **0%**		
Grade & Factor **0 0%**		
1.E Grade	4.B Grade	7.
2.D Grade	5.A Grade	8.SC Grade
3.C Grade	6.AA Grade	9.Same
SQFT (Footprint) **0**		
Condition **0**		
1.Poor	4.Avg	7.V G
2.Fair	5.Avg+	8.Exc
3.Avg-	6.Good	9.Same
Phys. % Good **0%**		
Funct. % Good **100%**		
Functional Code **9 None**		
1.Incomp	4.Delap	7.No Power
2.O-Built	5.Bsmt	8.LongTerm
3.Damage	6.Common	9.None
Econ. % Good **100%**		
Economic Code **None**		
0.None	3.No Power	7.
1.Location	4.Generate	8.
2.Encroach	9.None	9.
Entrance Code **0**		
1.Interior	4.Vacant	7.
2.Refusal	5.Estimate	8.
3.Informed	6.Reviewed	9.
Information Code **0**		
1.Owner	4.Agent	7.
2.Relative	5.Estimate	8.
3.Tenant	6.Other	9.

Date Inspected

Additions, Outbuildings & Improvements

Type	Year	Units	Grade	Cond	Phys.	Funct.	Sound Value
					%	%	
					%	%	
					%	%	
					%	%	
					%	%	
					%	%	
					%	%	
					%	%	
					%	%	
					%	%	

1.One Story Fram
2.Two Story Fram
3.Three Story Fr
4.1 & 1/2 Story
5.1 & 3/4 Story
6.2 & 1/2 Story
21.Open Frame Por
22.Encl Frame Por
23.Frame Garage
24.Frame Shed
25.Frame Bay Wind
26.1SFr Overhang
27.Unfin Basement
28.Unfinished Att
29.Finished Attic

Map Lot 006-006 Account 452 Location CROSS ROAD Card 1 Of 1 11/18/2020

FLEWELLING, FREDERIC N.
FLEWELLING, PATSY A.
P.O. BOX 398

CROUSEVILLE ME 04738
B2055P158 B4513P1

Property Data

Neighborhood **1 Neighborhood One**

Tree Growth Year **0**

1ST MORTGAGE **0**

2ND MORTGAGE **0**

Zone/Land Use **1 Residential**

Secondary Zone

Topography **2 Rolling**

1.Level	4.Below St	7.LevelBog
2.Rolling	5.Low	8.
3.Above St	6.Swampy	9.

Utilities

1.Public	4.Dr Well	7.Cesspool
2.Water	5.Dug Well	8.
3.Sewer	6.Septic	9.None

Street **1 Paved**

1.Paved	4.Proposed	7.
2.Semi Imp	5.R/O/W	8.
3.Gravel	6.	9.None

TG PLAN YEAR **0**

Tif District # **0**

Sale Data

Sale Date **1/15/1988**

Price

Sale Type **1 Land Only**

1.Land	4.Mobile	7.C/I L&B
2.L & B	5.Other	8.
3.Building	6.C/I Land	9.

Financing **1 Conventional**

1.Convent	4.Seller	7.
2.FHA/VA	5.Private	8.
3.Assumed	6.Cash	9.Unknown

Validity **2 Related Parties**

1.Valid	4.Split	7.Renovate
2.Related	5.Partial	8.Other
3.Distress	6.Exempt	9.

Verified **5 Public Record**

1.Buyer	4.Agent	7.Family
2.Seller	5.Pub Rec	8.Other
3.Lender	6.MLS	9.

Assessment Record

Year	Land	Buildings	Exempt	Total
2007	31,400	0	0	31,400
2008	32,600	0	0	32,600
2009	34,200	0	0	34,200
2012	34,300	0	0	34,300
2013	43,000	0	0	43,000
2015	43,000	0	0	43,000
2018	47,700	0	0	47,700
2019	55,400	0	0	55,400
2020	55,500	0	0	55,500

Land Data

Front Foot	Type	Effective Frontage	Effective Depth	Influence Factor	Influence Code
11.Regular Lot				%	
12.Delta Triangle				%	
13.Nabla Triangle				%	
14.Rear Land				%	
15.Class I Road				%	
				%	
				%	
Square Foot		**Square Feet**			
16.Class II Road				%	
17.Municipal Rese				%	
18.Munic Sep Lago				%	
19.Gravel Pit				%	
20.Industrial Bas				%	
				%	
				%	
Fract. Acre		**Acreage/Sites**			
21.Developed Pave	22	1.00	100	%	0
22.Undev Paved (F	28	45.27	100	%	0
23.Developed Grav	38	69.90	100	%	0
Acres	39	14.80	100	%	0
24.Undev Gravel (	28	20.43	100	%	0
25.Comm Base Pave				%	
26.Comm Base Grav				%	
27.Backlot					
28.Rear Land					
29.Pavement					

Total Acreage 151.40

Influence Codes

1.Unimproved
2.Excess Frtg
3.Topography
4.Size/Shape
5.Access
6.Restriction
7.Open Space
8.View/Environ
9.Fract Share
Acres
30.Utility R O W
31.Tillable
32.Pasture
33.Orchard
34.Softwood F&O
35.Mixed Wood F&O
36.Hardwood F&O
37.Softwood TG
38.Mixed Wood TG
39.Hardwood TG
40.Wasteland
41.Open Space
42.Mobile Home Si
43.Condo Site
44.Lot Improvemen
45.Subdivision Lo
46.Heavy Ind Sit

Inspection Witnessed By:

X Date

No./Date	Description	Date Insp.

Notes:

Washburn

Washburn

Map Lot 006-006 | Account 452 | Location CROSS ROAD | Card 1 Of 1 | 11/18/2020

Building Style **0**		
1.Conv.	5.Garrison	9.Gambrel
2.Ranch	6.Salt Box	10.Other
3.R Ranch	7.Contemp	11.Split
4.Cape	8.Log	12.
Dwelling Units **0**		
Other Units **0**		
Stories **0**		
1.1	4.1.5	7.
2.2	5.1.75	8.
3.3	6.2.5	9.
Exterior Walls **0**		
1.Wood	5.Stucco	9.T-111
2.Vin/Al	6.Brick	10.Other
3.Compos.	7.Stone	11.
4.Asbestos	8.Concrete	12.
Roof Surface **0**		
1.Asphalt	4.Composit	7.
2.Slate	5.Wood	8.
3.Metal	6.Other	9.
SF Masonry Trim **0**		
OPEN-3-CUSTOM **0**		
OPEN-4-CUSTOM **0**		
Year Built **0**		
Year Remodeled **0**		
Foundation **0**		
1.Concrete	4.Wood	7.
2.C Block	5.Slab	8.
3.Br/Stone	6.Piers	9.
Basement **0**		
1.1/4 Bmt	4.Full Bmt	7.
2.1/2 Bmt	5.None	8.
3.3/4 Bmt	6.	9.None
Bsmt Gar # Cars **0**		
Wet Basement **0**		
1.Dry	4.	7.
2.Damp	5.	8.
3.Wet	6.	9.

SF Bsmt Living **0**		
Fin Bsmt Grade **0 0**		
OPEN 5 OPTIONAL **0**		
Heat Type **100%** **0**		
1.HWBB	5.FWA	9.No Heat
2.HWCI	6.GravWA	10.
3.H Pump	7.Electric	11.
4.Steam	8.Fl/Wall	12.
Cool Type **0%** **9 None**		
1.Refrig	4.W&C Air	7.
2.Evapor	5.	8.
3.H Pump	6.	9.None
Kitchen Style **0**		
1.Modern	4.Obsolete	7.
2.Typical	5.	8.
3.Old Type	6.	9.None
Bath(s) Style **0**		
1.Modern	4.Obsolete	7.
2.Typical	5.	8.
3.Old Type	6.	9.None
# Rooms **0**		
# Bedrooms **0**		
# Full Baths **0**		
# Half Baths **0**		
# Addn Fixtures **0**		
# Fireplaces **0**		

TRIO Software
A Division of Harris Computer Systems

Layout **0**		
1.Typical	4.	7.
2.Inadeq	5.	8.
3.Poor	6.	9.
Attic **0**		
1.1/4 Fin	4.Full Fin	7.
2.1/2 Fin	5.Fl/Stair	8.
3.3/4 Fin	6.	9.None
Insulation **0**		
1.Full	4.Minimal	7.
2.Heavy	5.Partial	8.
3.Capped	6.	9.None
Unfinished % **0%**		
Grade & Factor **0 0%**		
1.E Grade	4.B Grade	7.
2.D Grade	5.A Grade	8.SC Grade
3.C Grade	6.AA Grade	9.Same
SQFT (Footprint) **0**		
Condition **0**		
1.Poor	4.Avg	7.V G
2.Fair	5.Avg+	8.Exc
3.Avg-	6.Good	9.Same
Phys. % Good **0%**		
Funct. % Good **100%**		
Functional Code **9 None**		
1.Incomp	4.Delap	7.No Power
2.O-Built	5.Bsmt	8.LongTerm
3.Damage	6.Common	9.None
Econ. % Good **100%**		
Economic Code **None**		
0.None	3.No Power	7.
1.Location	4.Generate	8.
2.Encroach	9.None	9.
Entrance Code **0**		
1.Interior	4.Vacant	7.
2.Refusal	5.Estimate	8.
3.Informed	6.Reviewed	9.
Information Code **0**		
1.Owner	4.Agent	7.
2.Relative	5.Estimate	8.
3.Tenant	6.Other	9.

Date Inspected

Additions, Outbuildings & Improvements

Type	Year	Units	Grade	Cond	Phys.	Funct.	Sound Value
					%	%	
					%	%	
					%	%	
					%	%	
					%	%	
					%	%	
					%	%	
					%	%	
					%	%	
					%	%	

1.One Story Fram
2.Two Story Fram
3.Three Story Fr
4.1 & 1/2 Story
5.1 & 3/4 Story
6.2 & 1/2 Story
21.Open Frame Por
22.Encl Frame Por
23.Frame Garage
24.Frame Shed
25.Frame Bay Wind
26.1SFr Overhang
27.Unfin Basement
28.Unfinished Att
29.Finished Attic

Map Lot 006-007 Account 34 Location 668 CROSS ROAD Card 1 Of 1 11/18/2020

BECKWITH, GERALDINE M.
BECKWITH, ERIC M.
PENDEXTER, TREVOR A.
P.O. BOX 458
CROUSEVILLE ME 04738
B4687P179

Property Data

Neighborhood **1 Neighborhood One**

Tree Growth Year **0**

1ST MORTGAGE **0**

2ND MORTGAGE **0**

Zone/Land Use **1 Residential**

Secondary Zone

Topography **1 Level**

1.Level	4.Below St	7.LevelBog
2.Rolling	5.Low	8.
3.Above St	6.Swampy	9.

Utilities **4 Drilled Well** **6 Septic System**

1.Public	4.Dr Well	7.Cesspool
2.Water	5.Dug Well	8.
3.Sewer	6.Septic	9.None

Street **1 Paved**

1.Paved	4.Proposed	7.
2.Semi Imp	5.R/O/W	8.
3.Gravel	6.	9.None

TG PLAN YEAR **0**

Tif District # **0**

Sale Data

Sale Date **4/08/2009**

Price

Sale Type **2 Land & Buildings**

1.Land	4.Mobile	7.C/I L&B
2.L & B	5.Other	8.
3.Building	6.C/I Land	9.

Financing

1.Convent	4.Seller	7.
2.FHA/VA	5.Private	8.
3.Assumed	6.Cash	9.Unknown

Validity **2 Related Parties**

1.Valid	4.Split	7.Renovate
2.Related	5.Partial	8.Other
3.Distress	6.Exempt	9.

Verified **5 Public Record**

1.Buyer	4.Agent	7.Family
2.Seller	5.Pub Rec	8.Other
3.Lender	6.MLS	9.

Assessment Record

Year	Land	Buildings	Exempt	Total
2007	7,000	10,300	13,000	4,300
2008	7,000	10,300	13,000	4,300
2009	7,000	10,300	9,000	8,300
2012	7,000	10,300	8,800	8,500
2013	9,100	20,600	8,800	20,900
2015	9,100	20,600	9,000	20,700
2018	9,100	20,600	18,400	11,300
2019	17,000	37,200	20,000	34,200
2020	17,000	37,100	25,000	29,100

Land Data

Front Foot	Type	Effective Frontage	Effective Depth	Influence Factor	Influence Code
11.Regular Lot				%	
12.Delta Triangle				%	
13.Nabla Triangle				%	
14.Rear Land				%	
15.Class I Road				%	
				%	
				%	
Square Foot		**Square Feet**			
16.Class II Road				%	
17.Municipal Rese				%	
18.Munic Sep Lago				%	
19.Gravel Pit				%	
20.Industrial Bas				%	
				%	
				%	
Fract. Acre		**Acreage/Sites**			
21.Developed Pave	21	1.00	100	%	0
22.Undev Paved (F	28	1.00	100	%	0
23.Developed Grav				%	
Acres				%	
24.Undev Gravel (				%	
25.Comm Base Pave				%	
26.Comm Base Grav				%	
27.Backlot				%	
28.Rear Land				%	
29.Pavement				%	

Total Acreage 2.00

Influence Codes

1.Unimproved
2.Excess Frtg
3.Topography
4.Size/Shape
5.Access
6.Restriction
7.Open Space
8.View/Environ
9.Fract Share
Acres
30.Utility R O W
31.Tillable
32.Pasture
33.Orchard
34.Softwood F&O
35.Mixed Wood F&O
36.Hardwood F&O
37.Softwood TG
38.Mixed Wood TG
39.Hardwood TG
40.Wasteland
41.Open Space
42.Mobile Home Si
43.Condo Site
44.Lot Improvemen
45.Subdivision Lo
46.Heavy Ind Sit

Inspection Witnessed By:

X Date

No./Date	Description	Date Insp.

Notes:

Washburn

Washburn

Map Lot 006-007 | Account 34 | Location 668 CROSS ROAD | Card 1 Of 1 | 11/18/2020

Building Style	**4 Cape Cod**		
1.Conv.	5.Garrison	9.Gambrel	
2.Ranch	6.Salt Box	10.Other	
3.R Ranch	7.Contemp	11.Split	
4.Cape	8.Log	12.	
Dwelling Units	**1**		
Other Units	**0**		
Stories	**4 One & 1/2 Story**		
1.1	4.1.5	7.	
2.2	5.1.75	8.	
3.3	6.2.5	9.	
Exterior Walls	**2 Vinyl/Aluminum**		
1.Wood	5.Stucco	9.T-111	
2.Vin/Al	6.Brick	10.Other	
3.Compos.	7.Stone	11.	
4.Asbestos	8.Concrete	12.	
Roof Surface	**1 Asphalt Shingles**		
1.Asphalt	4.Composit	7.	
2.Slate	5.Wood	8.	
3.Metal	6.Other	9.	
SF Masonry Trim	**0**		
OPEN-3-CUSTOM	**0**		
OPEN-4-CUSTOM	**0**		
Year Built	**1920**		
Year Remodeled	**0**		
Foundation	**3 Brick &/or Stone**		
1.Concrete	4.Wood	7.	
2.C Block	5.Slab	8.	
3.Br/Stone	6.Piers	9.	
Basement	**4 Full Basement**		
1.1/4 Bmt	4.Full Bmt	7.	
2.1/2 Bmt	5.None	8.	
3.3/4 Bmt	6.	9.None	
Bsmt Gar # Cars	**0**		
Wet Basement	**2 Damp Basement**		
1.Dry	4.	7.	
2.Damp	5.	8.	
3.Wet	6.	9.	

SF Bsmt Living	**0**		
Fin Bsmt Grade	**0 0**		
OPEN 5 OPTIONAL	**0**		
Heat Type	**100%**	**5 Forced Warm Air**	
1.HWBB	5.FWA	9.No Heat	
2.HWCI	6.GravWA	10.	
3.H Pump	7.Electric	11.	
4.Steam	8.Fl/Wall	12.	
Cool Type	**0%**	**9 None**	
1.Refrig	4.W&C Air	7.	
2.Evapor	5.	8.	
3.H Pump	6.	9.None	
Kitchen Style	**2 Typical**		
1.Modern	4.Obsolete	7.	
2.Typical	5.	8.	
3.Old Type	6.	9.None	
Bath(s) Style	**2 Typical Bath(s)**		
1.Modern	4.Obsolete	7.	
2.Typical	5.	8.	
3.Old Type	6.	9.None	
# Rooms	**7**		
# Bedrooms	**4**		
# Full Baths	**1**		
# Half Baths	**0**		
# Addn Fixtures	**0**		
# Fireplaces	**0**		

TRIO Software
A Division of Harris Computer Systems

Layout	**1 Typical**		
1.Typical	4.	7.	
2.Inadeq	5.	8.	
3.Poor	6.	9.	
Attic	**9 None**		
1.1/4 Fin	4.Full Fin	7.	
2.1/2 Fin	5.Fl/Stair	8.	
3.3/4 Fin	6.	9.None	
Insulation	**1 Full**		
1.Full	4.Minimal	7.	
2.Heavy	5.Partial	8.	
3.Capped	6.	9.None	
Unfinished %	**0%**		
Grade & Factor	**2 Fair 100%**		
1.E Grade	4.B Grade	7.	
2.D Grade	5.A Grade	8.SC Grade	
3.C Grade	6.AA Grade	9.Same	
SQFT (Footprint)	**580**		
Condition	**3 Below Average**		
1.Poor	4.Avg	7.V G	
2.Fair	5.Avg+	8.Exc	
3.Avg-	6.Good	9.Same	
Phys. % Good	**0%**		
Funct. % Good	**100%**		
Functional Code	**9 None**		
1.Incomp	4.Delap	7.No Power	
2.O-Built	5.Bsmt	8.LongTerm	
3.Damage	6.Common	9.None	
Econ. % Good	**100%**		
Economic Code	**None**		
0.None	3.No Power	7.	
1.Location	4.Generate	8.	
2.Encroach	9.None	9.	
Entrance Code	**3 Information Only**		
1.Interior	4.Vacant	7.	
2.Refusal	5.Estimate	8.	
3.Informed	6.Reviewed	9.	
Information Code	**1 Owner**		
1.Owner	4.Agent	7.	
2.Relative	5.Estimate	8.	
3.Tenant	6.Other	9.	

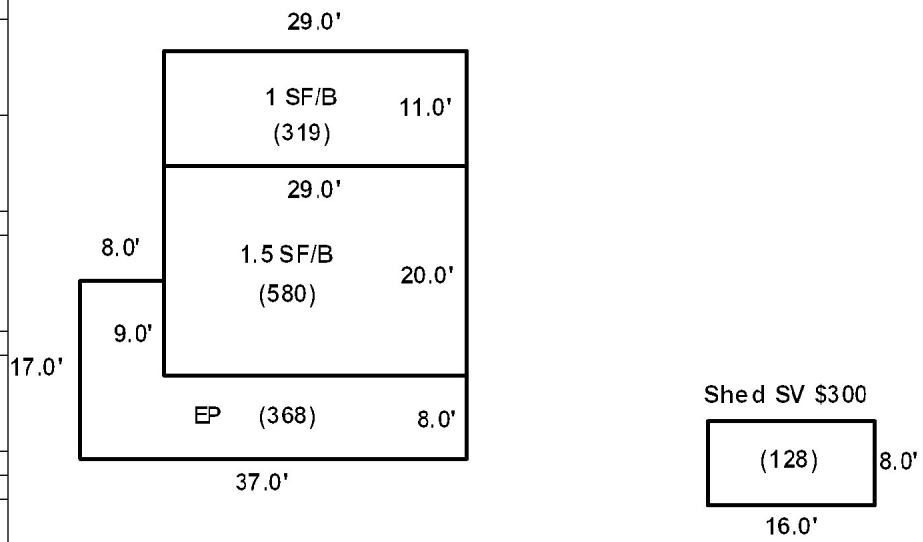

Date Inspected 9/23/2018

Additions, Outbuildings & Improvements

Type	Year	Units	Grade	Cond	Phys.	Funct.	Sound Value
20 1 Story/Bsmt	1920	319	2 100	3	0 %	100 %	
22 Encl Frame Porch	1980	368	2 100	3	0 %	100 %	
24 Frame Shed	0				%	%	300
					%	%	
					%	%	
					%	%	
					%	%	
					%	%	
					%	%	
					%	%	

1.One Story Fram
2.Two Story Fram
3.Three Story Fr
4.1 & 1/2 Story
5.1 & 3/4 Story
6.2 & 1/2 Story
21.Open Frame Por
22.Encl Frame Por
23.Frame Garage
24.Frame Shed
25.Frame Bay Wind
26.1SFr Overhang
27.Unfin Basement
28.Unfinished Att
29.Finished Attic

Map Lot 006-007/ON | Account 824 | Location 668 Cross Road | Card 1 Of 1 | 11/18/2020

Pendexter, Trevor A.

P.O. Box 345

Washburn ME 04786

Property Data

Neighborhood **1 Neighborhood One**

Tree Growth Year **0**

1ST MORTGAGE **0**

2ND MORTGAGE **0**

Zone/Land Use **1 Residential**

Secondary Zone

Topography **1 Level**

1.Level	4.Below St	7.LevelBog
2.Rolling	5.Low	8.
3.Above St	6.Swampy	9.

Utilities

1.Public	4.Dr Well	7.Cesspool
2.Water	5.Dug Well	8.
3.Sewer	6.Septic	9.None

Street **1 Paved**

1.Paved	4.Proposed	7.
2.Semi Imp	5.R/O/W	8.
3.Gravel	6.	9.None

TG PLAN YEAR **0**

Tif District # **0**

Sale Data

Sale Date

Price

Sale Type **3 Buildings Only**

1.Land	4.Mobile	7.C/I L&B
2.L & B	5.Other	8.
3.Building	6.C/I Land	9.

Financing

1.Convent	4.Seller	7.
2.FHA/VA	5.Private	8.
3.Assumed	6.Cash	9.Unknown

Validity

1.Valid	4.Split	7.Renovate
2.Related	5.Partial	8.Other
3.Distress	6.Exempt	9.

Verified

1.Buyer	4.Agent	7.Family
2.Seller	5.Pub Rec	8.Other
3.Lender	6.MLS	9.

Assessment Record

Year	Land	Buildings	Exempt	Total
2007	0	13,600	0	13,600
2008	0	13,600	0	13,600
2009	0	13,600	0	13,600
2012	0	13,600	0	13,600
2013	0	13,600	0	13,600
2015	0	13,600	0	13,600
2018	0	13,600	0	13,600
2019	0	21,600	0	21,600
2020	0	21,300	0	21,300

Land Data

Front Foot	Type	Effective Frontage	Effective Depth	Influence Factor	Influence Code
11.Regular Lot				%	
12.Delta Triangle				%	
13.Nabla Triangle				%	
14.Rear Land				%	
15.Class I Road				%	
				%	
				%	
Square Foot		**Square Feet**			
16.Class II Road				%	
17.Municipal Rese				%	
18.Munic Sep Lago				%	
19.Gravel Pit				%	
20.Industrial Bas				%	
				%	
				%	
Fract. Acre		**Acreage/Sites**			
21.Developed Pave				%	
22.Undev Paved (F				%	
23.Developed Grav				%	
Acres				%	
24.Undev Gravel (				%	
25.Comm Base Pave				%	
26.Comm Base Grav				%	
27.Backlot				%	
28.Rear Land					
29.Pavement					

Total Acreage 0.00

Influence Codes

1.Unimproved
2.Excess Frtg
3.Topography
4.Size/Shape
5.Access
6.Restriction
7.Open Space
8.View/Environ
9.Fract Share
Acres
30.Utility R O W
31.Tillable
32.Pasture
33.Orchard
34.Softwood F&O
35.Mixed Wood F&O
36.Hardwood F&O
37.Softwood TG
38.Mixed Wood TG
39.Hardwood TG
40.Wasteland
41.Open Space
42.Mobile Home Si
43.Condo Site
44.Lot Improvemen
45.Subdivision Lo
46.Heavy Ind Sit

Inspection Witnessed By:

X Date

No./Date	Description	Date Insp.

Notes:

*2-21-2019 -15% for size obs on garage.

Washburn

Washburn

Map Lot 006-007/ON | Account 824 | Location 668 Cross Road | Card 1 Of 1 | 11/18/2020

Building Style **0**		
1.Conv.	5.Garrison	9.Gambrel
2.Ranch	6.Salt Box	10.Other
3.R Ranch	7.Contemp	11.Split
4.Cape	8.Log	12.
Dwelling Units **0**		
Other Units **0**		
Stories **0**		
1.1	4.1.5	7.
2.2	5.1.75	8.
3.3	6.2.5	9.
Exterior Walls **0**		
1.Wood	5.Stucco	9.T-111
2.Vin/Al	6.Brick	10.Other
3.Compos.	7.Stone	11.
4.Asbestos	8.Concrete	12.
Roof Surface **0**		
1.Asphalt	4.Composit	7.
2.Slate	5.Wood	8.
3.Metal	6.Other	9.
SF Masonry Trim **0**		
OPEN-3-CUSTOM **0**		
OPEN-4-CUSTOM **0**		
Year Built **0**		
Year Remodeled **0**		
Foundation **0**		
1.Concrete	4.Wood	7.
2.C Block	5.Slab	8.
3.Br/Stone	6.Piers	9.
Basement **0**		
1.1/4 Bmt	4.Full Bmt	7.
2.1/2 Bmt	5.None	8.
3.3/4 Bmt	6.	9.None
Bsmt Gar # Cars **0**		
Wet Basement **0**		
1.Dry	4.	7.
2.Damp	5.	8.
3.Wet	6.	9.

SF Bsmt Living **0**		
Fin Bsmt Grade **0 0**		
OPEN 5 OPTIONAL **0**		
Heat Type **100%** **0**		
1.HWBB	5.FWA	9.No Heat
2.HWCI	6.GravWA	10.
3.H Pump	7.Electric	11.
4.Steam	8.Fl/Wall	12.
Cool Type **0%** **9 None**		
1.Refrig	4.W&C Air	7.
2.Evapor	5.	8.
3.H Pump	6.	9.None
Kitchen Style **0**		
1.Modern	4.Obsolete	7.
2.Typical	5.	8.
3.Old Type	6.	9.None
Bath(s) Style **0**		
1.Modern	4.Obsolete	7.
2.Typical	5.	8.
3.Old Type	6.	9.None
# Rooms **0**		
# Bedrooms **0**		
# Full Baths **0**		
# Half Baths **0**		
# Addn Fixtures **0**		
# Fireplaces **0**		

TRIO Software
A Division of Harris Computer Systems

Layout **0**		
1.Typical	4.	7.
2.Inadeq	5.	8.
3.Poor	6.	9.
Attic **0**		
1.1/4 Fin	4.Full Fin	7.
2.1/2 Fin	5.Fl/Stair	8.
3.3/4 Fin	6.	9.None
Insulation **0**		
1.Full	4.Minimal	7.
2.Heavy	5.Partial	8.
3.Capped	6.	9.None
Unfinished % **0%**		
Grade & Factor **0 0%**		
1.E Grade	4.B Grade	7.
2.D Grade	5.A Grade	8.SC Grade
3.C Grade	6.AA Grade	9.Same
SQFT (Footprint) **0**		
Condition **0**		
1.Poor	4.Avg	7.V G
2.Fair	5.Avg+	8.Exc
3.Avg-	6.Good	9.Same
Phys. % Good **0%**		
Funct. % Good **100%**		
Functional Code **9 None**		
1.Incomp	4.Delap	7.No Power
2.O-Built	5.Bsmt	8.LongTerm
3.Damage	6.Common	9.None
Econ. % Good **100%**		
Economic Code **None**		
0.None	3.No Power	7.
1.Location	4.Generate	8.
2.Encroach	9.None	9.
Entrance Code **5 Estimated**		
1.Interior	4.Vacant	7.
2.Refusal	5.Estimate	8.
3.Informed	6.Reviewed	9.
Information Code **5 Estimate**		
1.Owner	4.Agent	7.
2.Relative	5.Estimate	8.
3.Tenant	6.Other	9.

Date Inspected 9/23/2018

50.0'

26.0'

1.75 SF Garage

(1300)

Additions, Outbuildings & Improvements

Type	Year	Units	Grade	Cond	Phys.	Funct.	Sound Value
83 1.75 S-Gar	1970	1300	3 100	4	0 %	85 %	
					%	%	
					%	%	
					%	%	
					%	%	
					%	%	
					%	%	
					%	%	
					%	%	
					%	%	

1.One Story Fram
2.Two Story Fram
3.Three Story Fr
4.1 & 1/2 Story
5.1 & 3/4 Story
6.2 & 1/2 Story
21.Open Frame Por
22.Encl Frame Por
23.Frame Garage
24.Frame Shed
25.Frame Bay Wind
26.1SFr Overhang
27.Unfin Basement
28.Unfinished Att
29.Finished Attic

Map Lot 006-008 | Account 383 | Location 87 CARIBOU LAKE ROAD | Card 1 Of 1 | 11/18/2020

THERIAULT JR., DWAYNE

87 CARIBOU ROAD

WASHBURN ME 04786
B5612P233 B5956P208

Previous Owner
WILLEY, RICKY
d/b/a B, P & E ENTERPRISES
33 LYNDON STREET
CARIBOU ME 04736
Sale Date: 11/01/2019

Previous Owner
AROOSTOOK COUNTY FEDERAL SAVINGS & LOAN
P.O. BOX 808

CARIBOU ME 04736
Sale Date: 11/28/2016

Previous Owner
PRESTON, HOLLY J.
87 CARIBOU LAKE ROAD

WASHBURN ME 04786
Sale Date: 3/07/2016

Inspection Witnessed By:

X Date

No./Date	Description	Date Insp.

Notes:

Washburn

Property Data

Neighborhood **1 Neighborhood One**

Tree Growth Year **0**

1ST MORTGAGE **0**

2ND MORTGAGE **0**

Zone/Land Use **1 Residential**

Secondary Zone

Topography **1 Level**

1.Level 4.Below St 7.LevelBog
2.Rolling 5.Low 8.
3.Above St 6.Swampy 9.

Utilities **4 Drilled Well** **6 Septic System**

1.Public 4.Dr Well 7.Cesspool
2.Water 5.Dug Well 8.
3.Sewer 6.Septic 9.None

Street **1 Paved**

1.Paved 4.Proposed 7.
2.Semi Imp 5.R/O/W 8.
3.Gravel 6. 9.None

TG PLAN YEAR **0**

Tif District # **0**

Sale Data

Sale Date **11/01/2019**

Price **91,000**

Sale Type **2 Land & Buildings**

1.Land 4.Mobile 7.C/I L&B
2.L & B 5.Other 8.
3.Building 6.C/I Land 9.

Financing **1 Conventional**

1.Convent 4.Seller 7.
2.FHA/VA 5.Private 8.
3.Assumed 6.Cash 9.Unknown

Validity **1 Arms Length Sale**

1.Valid 4.Split 7.Renovate
2.Related 5.Partial 8.Other
3.Distress 6.Exempt 9.

Verified **5 Public Record**

1.Buyer 4.Agent 7.Family
2.Seller 5.Pub Rec 8.Other
3.Lender 6.MLS 9.

Assessment Record

Year	Land	Buildings	Exempt	Total
2007	5,700	18,200	0	23,900
2008	5,700	18,200	0	23,900
2009	5,700	18,200	9,000	14,900
2012	5,700	18,200	8,800	15,100
2013	7,400	18,200	8,800	16,800
2015	7,400	18,200	9,000	16,600
2018	7,400	18,200	0	25,600
2019	14,300	63,000	0	77,300
2020	14,300	62,700	0	77,000

Land Data

Front Foot	Type	Effective Frontage	Effective Depth	Influence Factor	Influence Code
11.Regular Lot				%	
12.Delta Triangle				%	
13.Nabla Triangle				%	
14.Rear Land				%	
15.Class I Road				%	
				%	
				%	
Square Foot		**Square Feet**			
16.Class II Road				%	
17.Municipal Rese				%	
18.Munic Sep Lago				%	
19.Gravel Pit				%	
20.Industrial Bas				%	
				%	
				%	
Fract. Acre		**Acreage/Sites**			
21.Developed Pave	21	0.75		100 %	0
22.Undev Paved (F				%	
23.Developed Grav				%	
Acres				%	
24.Undev Gravel (				%	
25.Comm Base Pave				%	
26.Comm Base Grav				%	
27.Backlot				%	
28.Rear Land				%	
29.Pavement				%	

Total Acreage 0.75

Influence Codes

1.Unimproved
2.Excess Frtg
3.Topography
4.Size/Shape
5.Access
6.Restriction
7.Open Space
8.View/Environ
9.Fract Share
Acres
30.Utility R O W
31.Tillable
32.Pasture
33.Orchard
34.Softwood F&O
35.Mixed Wood F&O
36.Hardwood F&O
37.Softwood TG
38.Mixed Wood TG
39.Hardwood TG
40.Wasteland
41.Open Space
42.Mobile Home Si
43.Condo Site
44.Lot Improvemen
45.Subdivision Lo
46.Heavy Ind Sit

Washburn

Map Lot 006-008 | Account 383 | Location 87 CARIBOU LAKE ROAD | Card 1 Of 1 | 11/18/2020

Building Style	**4 Cape Cod**		
1.Conv.	5.Garrison	9.Gambrel	
2.Ranch	6.Salt Box	10.Other	
3.R Ranch	7.Contemp	11.Split	
4.Cape	8.Log	12.	
Dwelling Units	**1**		
Other Units	**0**		
Stories	**4 One & 1/2 Story**		
1.1	4.1.5	7.	
2.2	5.1.75	8.	
3.3	6.2.5	9.	
Exterior Walls	**2 Vinyl/Aluminum**		
1.Wood	5.Stucco	9.T-111	
2.Vin/Al	6.Brick	10.Other	
3.Compos.	7.Stone	11.	
4.Asbestos	8.Concrete	12.	
Roof Surface	**3 Sheet Metal**		
1.Asphalt	4.Composit	7.	
2.Slate	5.Wood	8.	
3.Metal	6.Other	9.	
SF Masonry Trim	**0**		
OPEN-3-CUSTOM	**0**		
OPEN-4-CUSTOM	**0**		
Year Built	**1950**		
Year Remodeled	**0**		
Foundation	**1 Concrete**		
1.Concrete	4.Wood	7.	
2.C Block	5.Slab	8.	
3.Br/Stone	6.Piers	9.	
Basement	**4 Full Basement**		
1.1/4 Bmt	4.Full Bmt	7.	
2.1/2 Bmt	5.None	8.	
3.3/4 Bmt	6.	9.None	
Bsmt Gar # Cars	**0**		
Wet Basement	**1 Dry Basement**		
1.Dry	4.	7.	
2.Damp	5.	8.	
3.Wet	6.	9.	

SF Bsmt Living	**0**		
Fin Bsmt Grade	**0 0**		
OPEN 5 OPTIONAL	**0**		
Heat Type	**100%**	**1 Hot Water BB**	
1.HWBB	5.FWA	9.No Heat	
2.HWCI	6.GravWA	10.	
3.H Pump	7.Electric	11.	
4.Steam	8.Fl/Wall	12.	
Cool Type	**0%**	**9 None**	
1.Refrig	4.W&C Air	7.	
2.Evapor	5.	8.	
3.H Pump	6.	9.None	
Kitchen Style	**2 Typical**		
1.Modern	4.Obsolete	7.	
2.Typical	5.	8.	
3.Old Type	6.	9.None	
Bath(s) Style	**2 Typical Bath(s)**		
1.Modern	4.Obsolete	7.	
2.Typical	5.	8.	
3.Old Type	6.	9.None	
# Rooms	**5**		
# Bedrooms	**3**		
# Full Baths	**1**		
# Half Baths	**0**		
# Addn Fixtures	**0**		
# Fireplaces	**0**		

TRIO Software
A Division of Harris Computer Systems

Layout	**1 Typical**		
1.Typical	4.	7.	
2.Inadeq	5.	8.	
3.Poor	6.	9.	
Attic	**9 None**		
1.1/4 Fin	4.Full Fin	7.	
2.1/2 Fin	5.Fl/Stair	8.	
3.3/4 Fin	6.	9.None	
Insulation	**1 Full**		
1.Full	4.Minimal	7.	
2.Heavy	5.Partial	8.	
3.Capped	6.	9.None	
Unfinished %	**0%**		
Grade & Factor	**2 Fair 110%**		
1.E Grade	4.B Grade	7.	
2.D Grade	5.A Grade	8.SC Grade	
3.C Grade	6.AA Grade	9.Same	
SQFT (Footprint)	**644**		
Condition	**6 Good**		
1.Poor	4.Avg	7.V G	
2.Fair	5.Avg+	8.Exc	
3.Avg-	6.Good	9.Same	
Phys. % Good	**0%**		
Funct. % Good	**100%**		
Functional Code	**9 None**		
1.Incomp	4.Delap	7.No Power	
2.O-Built	5.Bsmt	8.LongTerm	
3.Damage	6.Common	9.None	
Econ. % Good	**100%**		
Economic Code	**None**		
0.None	3.No Power	7.	
1.Location	4.Generate	8.	
2.Encroach	9.None	9.	
Entrance Code	**3 Information Only**		
1.Interior	4.Vacant	7.	
2.Refusal	5.Estimate	8.	
3.Informed	6.Reviewed	9.	
Information Code	**3 Tenant**		
1.Owner	4.Agent	7.	
2.Relative	5.Estimate	8.	
3.Tenant	6.Other	9.	

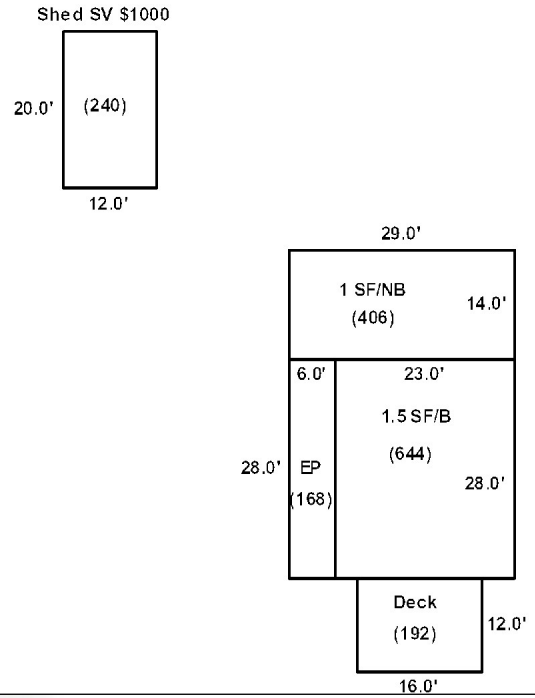

Date Inspected 9/23/2018

Additions, Outbuildings & Improvements

Type	Year	Units	Grade	Cond	Phys.	Funct.	Sound Value
68 Wood Deck	2000	192	2 105	4	0 %	100 %	
22 Encl Frame Porch	1950	168	3 100	4	0 %	100 %	
1 One Story Frame	1950	406	3 100	4	0 %	100 %	
24 Frame Shed	0				%	%	1,000
					%	%	
					%	%	
					%	%	
					%	%	
					%	%	
					%	%	

1.One Story Fram
2.Two Story Fram
3.Three Story Fr
4.1 & 1/2 Story
5.1 & 3/4 Story
6.2 & 1/2 Story
21.Open Frame Por
22.Encl Frame Por
23.Frame Garage
24.Frame Shed
25.Frame Bay Wind
26.1SFr Overhang
27.Unfin Basement
28.Unfinished Att
29.Finished Attic

Map Lot 006-009 Account 660 Location 65 CARIBOU LAKE ROAD Card 1 Of 1 11/18/2020

ROUSE, DARRELL D.

65 CARIBOU LAKE ROAD

WASHBURN ME 04786
B5241P155

Property Data

Neighborhood **1 Neighborhood One**

Tree Growth Year **0**

1ST MORTGAGE **0**

2ND MORTGAGE **0**

Zone/Land Use **1 Residential**

Secondary Zone

Topography **1 Level**

1.Level	4.Below St	7.LevelBog
2.Rolling	5.Low	8.
3.Above St	6.Swampy	9.

Utilities **4 Drilled Well** **6 Septic System**

1.Public	4.Dr Well	7.Cesspool
2.Water	5.Dug Well	8.
3.Sewer	6.Septic	9.None

Street **1 Paved**

1.Paved	4.Proposed	7.
2.Semi Imp	5.R/O/W	8.
3.Gravel	6.	9.None

TG PLAN YEAR **0**

Tif District # **0**

Sale Data

Sale Date **10/04/2013**

Price

Sale Type **2 Land & Buildings**

1.Land	4.Mobile	7.C/I L&B
2.L & B	5.Other	8.
3.Building	6.C/I Land	9.

Financing

1.Convent	4.Seller	7.
2.FHA/VA	5.Private	8.
3.Assumed	6.Cash	9.Unknown

Validity **2 Related Parties**

1.Valid	4.Split	7.Renovate
2.Related	5.Partial	8.Other
3.Distress	6.Exempt	9.

Verified **5 Public Record**

1.Buyer	4.Agent	7.Family
2.Seller	5.Pub Rec	8.Other
3.Lender	6.MLS	9.

Assessment Record

Year	Land	Buildings	Exempt	Total
2007	68,300	41,500	13,000	96,800
2008	68,300	41,500	13,000	96,800
2009	68,300	41,500	0	109,800
2012	68,300	41,500	0	109,800
2013	9,200	41,500	0	50,700
2015	9,200	41,500	14,400	36,300
2018	9,200	41,500	23,920	26,780
2019	17,100	60,900	26,000	52,000
2020	17,100	60,900	31,000	47,000

Land Data

Front Foot	Type	Effective Frontage	Effective Depth	Influence Factor	Influence Code
11.Regular Lot				%	
12.Delta Triangle				%	
13.Nabla Triangle				%	
14.Rear Land				%	
15.Class I Road				%	
				%	
				%	
Square Foot		**Square Feet**			
16.Class II Road				%	
17.Municipal Rese				%	
18.Munic Sep Lago				%	
19.Gravel Pit				%	
20.Industrial Bas				%	
				%	
				%	
Fract. Acre		**Acreage/Sites**			
21.Developed Pave	21	1.00	100	%	0
22.Undev Paved (F	28	1.18	100	%	0
23.Developed Grav				%	
Acres				%	
24.Undev Gravel (				%	
25.Comm Base Pave				%	
26.Comm Base Grav				%	
27.Backlot				%	
28.Rear Land				%	
29.Pavement				%	

Total Acreage 2.18

Influence Codes

1.Unimproved
2.Excess Frtg
3.Topography
4.Size/Shape
5.Access
6.Restriction
7.Open Space
8.View/Environ
9.Fract Share
Acres
30.Utility R O W
31.Tillable
32.Pasture
33.Orchard
34.Softwood F&O
35.Mixed Wood F&O
36.Hardwood F&O
37.Softwood TG
38.Mixed Wood TG
39.Hardwood TG
40.Wasteland
41.Open Space
42.Mobile Home Si
43.Condo Site
44.Lot Improvemen
45.Subdivision Lo
46.Heavy Ind Sit

Inspection Witnessed By:

X Date

No./Date	Description	Date Insp.

Notes:
*2-21-2019 -15% for size obs on 1.5 SF Barn.

Washburn

Washburn

Map Lot 006-009 | Account 660 | Location 65 CARIBOU LAKE ROAD | Card 1 Of 1 | 11/18/2020

Building Style	**4 Cape Cod**		
1.Conv.	5.Garrison	9.Gambrel	
2.Ranch	6.Salt Box	10.Other	
3.R Ranch	7.Contemp	11.Split	
4.Cape	8.Log	12.	
Dwelling Units	**1**		
Other Units	**0**		
Stories	**4 One & 1/2 Story**		
1.1	4.1.5	7.	
2.2	5.1.75	8.	
3.3	6.2.5	9.	
Exterior Walls	**1 Wood Siding**		
1.Wood	5.Stucco	9.T-111	
2.Vin/Al	6.Brick	10.Other	
3.Compos.	7.Stone	11.	
4.Asbestos	8.Concrete	12.	
Roof Surface	**1 Asphalt Shingles**		
1.Asphalt	4.Composit	7.	
2.Slate	5.Wood	8.	
3.Metal	6.Other	9.	
SF Masonry Trim	**0**		
OPEN-3-CUSTOM	**0**		
OPEN-4-CUSTOM	**0**		
Year Built	**1908**		
Year Remodeled	**1940**		
Foundation	**1 Concrete**		
1.Concrete	4.Wood	7.	
2.C Block	5.Slab	8.	
3.Br/Stone	6.Piers	9.	
Basement	**4 Full Basement**		
1.1/4 Bmt	4.Full Bmt	7.	
2.1/2 Bmt	5.None	8.	
3.3/4 Bmt	6.	9.None	
Bsmt Gar # Cars	**0**		
Wet Basement	**1 Dry Basement**		
1.Dry	4.	7.	
2.Damp	5.	8.	
3.Wet	6.	9.	

SF Bsmt Living	**0**		
Fin Bsmt Grade	**0 0**		
OPEN 5 OPTIONAL	**0**		
Heat Type	**100%**	**5 Forced Warm Air**	
1.HWBB	5.FWA	9.No Heat	
2.HWCI	6.GravWA	10.	
3.H Pump	7.Electric	11.	
4.Steam	8.Fl/Wall	12.	
Cool Type	**0%**	**9 None**	
1.Refrig	4.W&C Air	7.	
2.Evapor	5.	8.	
3.H Pump	6.	9.None	
Kitchen Style	**2 Typical**		
1.Modern	4.Obsolete	7.	
2.Typical	5.	8.	
3.Old Type	6.	9.None	
Bath(s) Style	**2 Typical Bath(s)**		
1.Modern	4.Obsolete	7.	
2.Typical	5.	8.	
3.Old Type	6.	9.None	
# Rooms	**7**		
# Bedrooms	**4**		
# Full Baths	**1**		
# Half Baths	**1**		
# Addn Fixtures	**0**		
# Fireplaces	**0**		

TRIO Software
A Division of Harris Computer Systems

Layout	**1 Typical**		
1.Typical	4.	7.	
2.Inadeq	5.	8.	
3.Poor	6.	9.	
Attic	**9 None**		
1.1/4 Fin	4.Full Fin	7.	
2.1/2 Fin	5.Fl/Stair	8.	
3.3/4 Fin	6.	9.None	
Insulation	**4 Minimal**		
1.Full	4.Minimal	7.	
2.Heavy	5.Partial	8.	
3.Capped	6.	9.None	
Unfinished %	**0%**		
Grade & Factor	**2 Fair 100%**		
1.E Grade	4.B Grade	7.	
2.D Grade	5.A Grade	8.SC Grade	
3.C Grade	6.AA Grade	9.Same	
SQFT (Footprint)	**1244**		
Condition	**3 Below Average**		
1.Poor	4.Avg	7.V G	
2.Fair	5.Avg+	8.Exc	
3.Avg-	6.Good	9.Same	
Phys. % Good	**0%**		
Funct. % Good	**95%**		
Functional Code	**4 Delapidation**		
1.Incomp	4.Delap	7.No Power	
2.O-Built	5.Bsmt	8.LongTerm	
3.Damage	6.Common	9.None	
Econ. % Good	**100%**		
Economic Code	**None**		
0.None	3.No Power	7.	
1.Location	4.Generate	8.	
2.Encroach	9.None	9.	
Entrance Code	**5 Estimated**		
1.Interior	4.Vacant	7.	
2.Refusal	5.Estimate	8.	
3.Informed	6.Reviewed	9.	
Information Code	**5 Estimate**		
1.Owner	4.Agent	7.	
2.Relative	5.Estimate	8.	
3.Tenant	6.Other	9.	

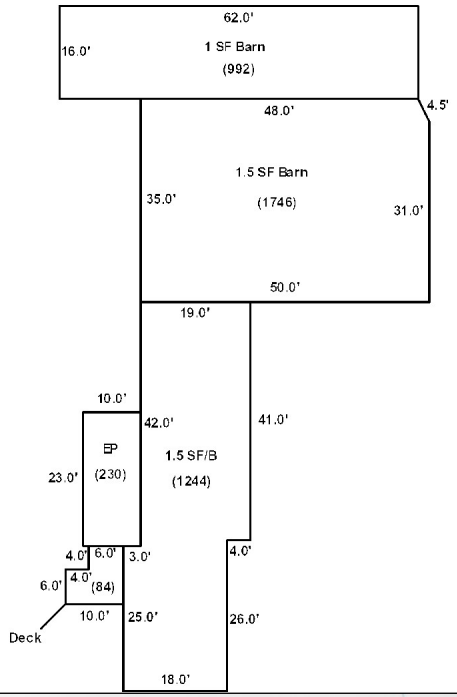

Date Inspected 9/23/2018

Additions, Outbuildings & Improvements

Type	Year	Units	Grade	Cond	Phys.	Funct.	Sound Value
68 Wood Deck	1980	84	3 95	4	0 %	100 %	
22 Encl Frame Porch	1940	230	3 90	4	0 %	100 %	
59 Barn	1900	992	2 105	3	0 %	100 %	
115 1.5 Story Barn	1900	1746	2 105	3	0 %	85 %	
					%	%	
					%	%	
					%	%	
					%	%	
					%	%	
					%	%	

1.One Story Fram
2.Two Story Fram
3.Three Story Fr
4.1 & 1/2 Story
5.1 & 3/4 Story
6.2 & 1/2 Story
21.Open Frame Por
22.Encl Frame Por
23.Frame Garage
24.Frame Shed
25.Frame Bay Wind
26.1SFr Overhang
27.Unfin Basement
28.Unfinished Att
29.Finished Attic

Map Lot 006-009A | Account 661 | Location 25 CARIBOU LAKE ROAD | Card 1 Of 1 | 11/18/2020

ROUSE, STEPHEN L.

25 CARIBOU LAKE ROAD

WASHBURN ME 04786
B5241P159

Property Data

Neighborhood **1 Neighborhood One**

Tree Growth Year **0**

1ST MORTGAGE **0**

2ND MORTGAGE **0**

Zone/Land Use **1 Residential**

Secondary Zone

Topography **2 Rolling**

1.Level	4.Below St	7.LevelBog
2.Rolling	5.Low	8.
3.Above St	6.Swampy	9.

Utilities **4 Drilled Well** **6 Septic System**

1.Public	4.Dr Well	7.Cesspool
2.Water	5.Dug Well	8.
3.Sewer	6.Septic	9.None

Street **1 Paved**

1.Paved	4.Proposed	7.
2.Semi Imp	5.R/O/W	8.
3.Gravel	6.	9.None

TG PLAN YEAR **0**

Tif District # **0**

Sale Data

Sale Date

Price

Sale Type **2 Land & Buildings**

1.Land	4.Mobile	7.C/I L&B
2.L & B	5.Other	8.
3.Building	6.C/I Land	9.

Financing

1.Convent	4.Seller	7.
2.FHA/VA	5.Private	8.
3.Assumed	6.Cash	9.Unknown

Validity **2 Related Parties**

1.Valid	4.Split	7.Renovate
2.Related	5.Partial	8.Other
3.Distress	6.Exempt	9.

Verified **5 Public Record**

1.Buyer	4.Agent	7.Family
2.Seller	5.Pub Rec	8.Other
3.Lender	6.MLS	9.

Assessment Record

Year	Land	Buildings	Exempt	Total
2007	6,500	63,200	13,000	56,700
2008	6,500	63,200	13,000	56,700
2009	6,500	63,200	9,000	60,700
2012	6,500	63,200	8,800	60,900
2013	8,900	63,200	8,800	63,300
2015	8,900	63,200	14,400	57,700
2018	8,900	63,200	23,920	48,180
2019	16,900	67,800	26,000	58,700
2020	16,900	67,800	31,000	53,700

Land Data

Front Foot	Type	Effective Frontage	Effective Depth	Influence Factor	Influence Code
11.Regular Lot				%	
12.Delta Triangle				%	
13.Nabla Triangle				%	
14.Rear Land				%	
15.Class I Road				%	
				%	
				%	
Square Foot		**Square Feet**			
16.Class II Road				%	
17.Municipal Rese				%	
18.Munic Sep Lago				%	
19.Gravel Pit				%	
20.Industrial Bas				%	
				%	
				%	
Fract. Acre		**Acreage/Sites**			
21.Developed Pave	21	1.00	100	%	0
22.Undev Paved (F	28	0.74	100	%	0
23.Developed Grav				%	
Acres				%	
24.Undev Gravel (				%	
25.Comm Base Pave				%	
26.Comm Base Grav				%	
27.Backlot				%	
28.Rear Land				%	
29.Pavement				%	

Total Acreage 1.74

Influence Codes

1.Unimproved
2.Excess Frtg
3.Topography
4.Size/Shape
5.Access
6.Restriction
7.Open Space
8.View/Environ
9.Fract Share
Acres
30.Utility R O W
31.Tillable
32.Pasture
33.Orchard
34.Softwood F&O
35.Mixed Wood F&O
36.Hardwood F&O
37.Softwood TG
38.Mixed Wood TG
39.Hardwood TG
40.Wasteland
41.Open Space
42.Mobile Home Si
43.Condo Site
44.Lot Improvemen
45.Subdivision Lo
46.Heavy Ind Sit

Inspection Witnessed By:

X Date

No./Date	Description	Date Insp.

Notes:

Washburn

Washburn

Map Lot 006-009A | Account 661 | Location 25 CARIBOU LAKE ROAD | Card 1 Of 1 | 11/18/2020

Building Style	**4 Cape Cod**		
1.Conv.	5.Garrison	9.Gambrel	
2.Ranch	6.Salt Box	10.Other	
3.R Ranch	7.Contemp	11.Split	
4.Cape	8.Log	12.	
Dwelling Units	**1**		
Other Units	**0**		
Stories	**1 One Story**		
1.1	4.1.5	7.	
2.2	5.1.75	8.	
3.3	6.2.5	9.	
Exterior Walls	**1 Wood Siding**		
1.Wood	5.Stucco	9.T-111	
2.Vin/Al	6.Brick	10.Other	
3.Compos.	7.Stone	11.	
4.Asbestos	8.Concrete	12.	
Roof Surface	**1 Asphalt Shingles**		
1.Asphalt	4.Composit	7.	
2.Slate	5.Wood	8.	
3.Metal	6.Other	9.	
SF Masonry Trim	**0**		
OPEN-3-CUSTOM	**0**		
OPEN-4-CUSTOM	**0**		
Year Built	**1978**		
Year Remodeled	**0**		
Foundation	**1 Concrete**		
1.Concrete	4.Wood	7.	
2.C Block	5.Slab	8.	
3.Br/Stone	6.Piers	9.	
Basement	**4 Full Basement**		
1.1/4 Bmt	4.Full Bmt	7.	
2.1/2 Bmt	5.None	8.	
3.3/4 Bmt	6.	9.None	
Bsmt Gar # Cars	**2**		
Wet Basement	**1 Dry Basement**		
1.Dry	4.	7.	
2.Damp	5.	8.	
3.Wet	6.	9.	

SF Bsmt Living	**0**		
Fin Bsmt Grade	**0 0**		
OPEN 5 OPTIONAL	**0**		
Heat Type	**100%**	**5 Forced Warm Air**	
1.HWBB	5.FWA	9.No Heat	
2.HWCI	6.GravWA	10.	
3.H Pump	7.Electric	11.	
4.Steam	8.Fl/Wall	12.	
Cool Type	**0%**	**9 None**	
1.Refrig	4.W&C Air	7.	
2.Evapor	5.	8.	
3.H Pump	6.	9.None	
Kitchen Style	**2 Typical**		
1.Modern	4.Obsolete	7.	
2.Typical	5.	8.	
3.Old Type	6.	9.None	
Bath(s) Style	**2 Typical Bath(s)**		
1.Modern	4.Obsolete	7.	
2.Typical	5.	8.	
3.Old Type	6.	9.None	
# Rooms	**3**		
# Bedrooms	**2**		
# Full Baths	**1**		
# Half Baths	**0**		
# Addn Fixtures	**0**		
# Fireplaces	**0**		

TRIO Software
A Division of Harris Computer Systems

Layout	**1 Typical**		
1.Typical	4.	7.	
2.Inadeq	5.	8.	
3.Poor	6.	9.	
Attic	**9 None**		
1.1/4 Fin	4.Full Fin	7.	
2.1/2 Fin	5.Fl/Stair	8.	
3.3/4 Fin	6.	9.None	
Insulation	**1 Full**		
1.Full	4.Minimal	7.	
2.Heavy	5.Partial	8.	
3.Capped	6.	9.None	
Unfinished %	**0%**		
Grade & Factor	**3 Average 110%**		
1.E Grade	4.B Grade	7.	
2.D Grade	5.A Grade	8.SC Grade	
3.C Grade	6.AA Grade	9.Same	
SQFT (Footprint)	**1200**		
Condition	**5 Above Average**		
1.Poor	4.Avg	7.V G	
2.Fair	5.Avg+	8.Exc	
3.Avg-	6.Good	9.Same	
Phys. % Good	**0%**		
Funct. % Good	**100%**		
Functional Code	**9 None**		
1.Incomp	4.Delap	7.No Power	
2.O-Built	5.Bsmt	8.LongTerm	
3.Damage	6.Common	9.None	
Econ. % Good	**100%**		
Economic Code	**None**		
0.None	3.No Power	7.	
1.Location	4.Generate	8.	
2.Encroach	9.None	9.	
Entrance Code	**1 Interior Inspect**		
1.Interior	4.Vacant	7.	
2.Refusal	5.Estimate	8.	
3.Informed	6.Reviewed	9.	
Information Code	**1 Owner**		
1.Owner	4.Agent	7.	
2.Relative	5.Estimate	8.	
3.Tenant	6.Other	9.	

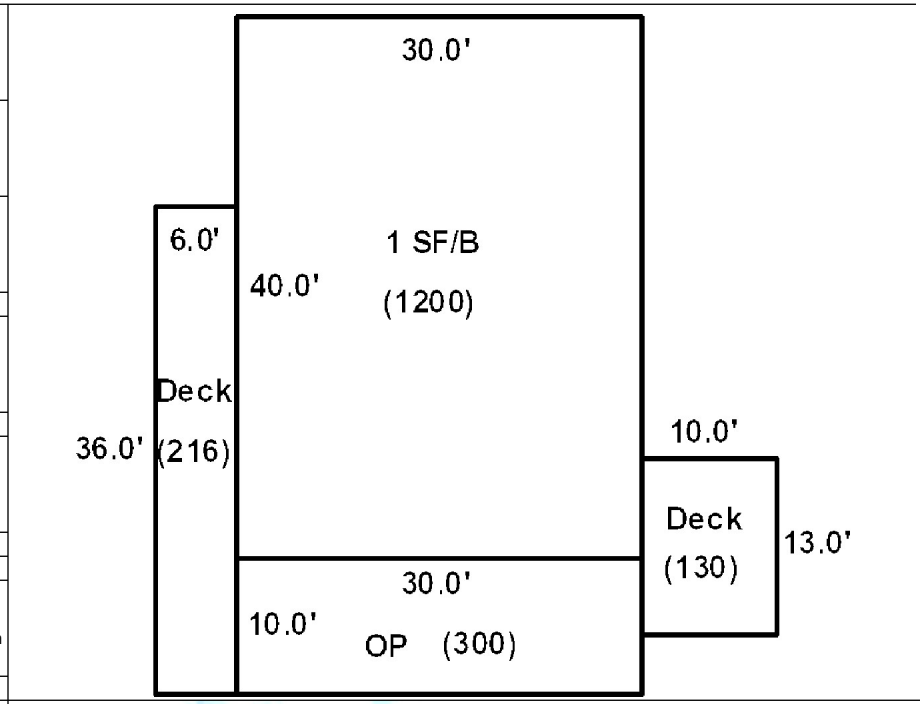

Date Inspected 10/06/2018

Additions, Outbuildings & Improvements

Type	Year	Units	Grade	Cond	Phys.	Funct.	Sound Value
68 Wood Deck	1978	216	3 105	4	0 %	100 %	
21 Open Frame	1978	300	3 100	4	0 %	100 %	
68 Wood Deck	1978	130	3 100	4	0 %	100 %	
					%	%	
					%	%	
					%	%	
					%	%	
					%	%	
					%	%	
					%	%	

1.One Story Fram
2.Two Story Fram
3.Three Story Fr
4.1 & 1/2 Story
5.1 & 3/4 Story
6.2 & 1/2 Story
21.Open Frame Por
22.Encl Frame Por
23.Frame Garage
24.Frame Shed
25.Frame Bay Wind
26.1SFr Overhang
27.Unfin Basement
28.Unfinished Att
29.Finished Attic

Map Lot 006-010 Account 457 Location Caribou Lake Road Card 1 Of 1 11/18/2020

Flewelling, Frederic N.
Flewelling, Patsy A.
P.O. Box 398

Crouseville ME 04738
B2055P158

Property Data

Neighborhood **1 Neighborhood One**

Tree Growth Year **0**

1ST MORTGAGE **0**

2ND MORTGAGE **0**

Zone/Land Use **1 Residential**

Secondary Zone

Topography **1 Level**

1.Level	4.Below St	7.LevelBog
2.Rolling	5.Low	8.
3.Above St	6.Swampy	9.

Utilities

1.Public	4.Dr Well	7.Cesspool
2.Water	5.Dug Well	8.
3.Sewer	6.Septic	9.None

Street **1 Paved**

1.Paved	4.Proposed	7.
2.Semi Imp	5.R/O/W	8.
3.Gravel	6.	9.None

TG PLAN YEAR **0**

Tif District # **0**

Sale Data

Sale Date

Price

Sale Type **1 Land Only**

1.Land	4.Mobile	7.C/I L&B
2.L & B	5.Other	8.
3.Building	6.C/I Land	9.

Financing

1.Convent	4.Seller	7.
2.FHA/VA	5.Private	8.
3.Assumed	6.Cash	9.Unknown

Validity

1.Valid	4.Split	7.Renovate
2.Related	5.Partial	8.Other
3.Distress	6.Exempt	9.

Verified

1.Buyer	4.Agent	7.Family
2.Seller	5.Pub Rec	8.Other
3.Lender	6.MLS	9.

Assessment Record

Year	Land	Buildings	Exempt	Total
2007	41,000	0	0	41,000
2008	41,000	0	0	41,000
2009	41,000	0	0	41,000
2012	41,000	0	0	41,000
2013	53,200	0	0	53,200
2015	53,200	0	0	53,200
2018	53,200	0	0	53,200
2019	91,000	0	0	91,000
2020	91,000	0	0	91,000

Land Data

Front Foot	Type	Effective Frontage	Effective Depth	Influence Factor	Influence Code
11.Regular Lot				%	
12.Delta Triangle				%	
13.Nabla Triangle				%	
14.Rear Land				%	
15.Class I Road				%	
				%	
				%	
Square Foot		**Square Feet**			
16.Class II Road				%	
17.Municipal Rese				%	
18.Munic Sep Lago				%	
19.Gravel Pit				%	
20.Industrial Bas				%	
				%	
				%	
Fract. Acre		**Acreage/Sites**			
21.Developed Pave	31	71.95	100	%	0
22.Undev Paved (F	28	38.05	100	%	0
23.Developed Grav				%	
Acres				%	
24.Undev Gravel (				%	
25.Comm Base Pave				%	
26.Comm Base Grav				%	
27.Backlot				%	
28.Rear Land				%	
29.Pavement				%	

Total Acreage 110.00

Influence Codes

1.Unimproved
2.Excess Frtg
3.Topography
4.Size/Shape
5.Access
6.Restriction
7.Open Space
8.View/Environ
9.Fract Share
Acres
30.Utility R O W
31.Tillable
32.Pasture
33.Orchard
34.Softwood F&O
35.Mixed Wood F&O
36.Hardwood F&O
37.Softwood TG
38.Mixed Wood TG
39.Hardwood TG
40.Wasteland
41.Open Space
42.Mobile Home Si
43.Condo Site
44.Lot Improvemen
45.Subdivision Lo
46.Heavy Ind Sit

Inspection Witnessed By:

X Date

No./Date	Description	Date Insp.

Notes:

Washburn

Washburn

Map Lot 006-010 | Account 457 | Location Caribou Lake Road | Card 1 Of 1 | 11/18/2020

Building Style **0**		
1.Conv.	5.Garrison	9.Gambrel
2.Ranch	6.Salt Box	10.Other
3.R Ranch	7.Contemp	11.Split
4.Cape	8.Log	12.
Dwelling Units **0**		
Other Units **0**		
Stories **0**		
1.1	4.1.5	7.
2.2	5.1.75	8.
3.3	6.2.5	9.
Exterior Walls **0**		
1.Wood	5.Stucco	9.T-111
2.Vin/Al	6.Brick	10.Other
3.Compos.	7.Stone	11.
4.Asbestos	8.Concrete	12.
Roof Surface **0**		
1.Asphalt	4.Composit	7.
2.Slate	5.Wood	8.
3.Metal	6.Other	9.
SF Masonry Trim **0**		
OPEN-3-CUSTOM **0**		
OPEN-4-CUSTOM **0**		
Year Built **0**		
Year Remodeled **0**		
Foundation **0**		
1.Concrete	4.Wood	7.
2.C Block	5.Slab	8.
3.Br/Stone	6.Piers	9.
Basement **0**		
1.1/4 Bmt	4.Full Bmt	7.
2.1/2 Bmt	5.None	8.
3.3/4 Bmt	6.	9.None
Bsmt Gar # Cars **0**		
Wet Basement **0**		
1.Dry	4.	7.
2.Damp	5.	8.
3.Wet	6.	9.

SF Bsmt Living **0**		
Fin Bsmt Grade **0 0**		
OPEN 5 OPTIONAL **0**		
Heat Type **100%** **0**		
1.HWBB	5.FWA	9.No Heat
2.HWCI	6.GravWA	10.
3.H Pump	7.Electric	11.
4.Steam	8.Fl/Wall	12.
Cool Type **0%** **9 None**		
1.Refrig	4.W&C Air	7.
2.Evapor	5.	8.
3.H Pump	6.	9.None
Kitchen Style **0**		
1.Modern	4.Obsolete	7.
2.Typical	5.	8.
3.Old Type	6.	9.None
Bath(s) Style **0**		
1.Modern	4.Obsolete	7.
2.Typical	5.	8.
3.Old Type	6.	9.None
# Rooms **0**		
# Bedrooms **0**		
# Full Baths **0**		
# Half Baths **0**		
# Addn Fixtures **0**		
# Fireplaces **0**		

TRIO Software
A Division of Harris Computer Systems

Layout **0**		
1.Typical	4.	7.
2.Inadeq	5.	8.
3.Poor	6.	9.
Attic **0**		
1.1/4 Fin	4.Full Fin	7.
2.1/2 Fin	5.Fl/Stair	8.
3.3/4 Fin	6.	9.None
Insulation **0**		
1.Full	4.Minimal	7.
2.Heavy	5.Partial	8.
3.Capped	6.	9.None
Unfinished % **0%**		
Grade & Factor **0 0%**		
1.E Grade	4.B Grade	7.
2.D Grade	5.A Grade	8.SC Grade
3.C Grade	6.AA Grade	9.Same
SQFT (Footprint) **0**		
Condition **0**		
1.Poor	4.Avg	7.V G
2.Fair	5.Avg+	8.Exc
3.Avg-	6.Good	9.Same
Phys. % Good **0%**		
Funct. % Good **100%**		
Functional Code **9 None**		
1.Incomp	4.Delap	7.No Power
2.O-Built	5.Bsmt	8.LongTerm
3.Damage	6.Common	9.None
Econ. % Good **100%**		
Economic Code **None**		
0.None	3.No Power	7.
1.Location	4.Generate	8.
2.Encroach	9.None	9.
Entrance Code **0**		
1.Interior	4.Vacant	7.
2.Refusal	5.Estimate	8.
3.Informed	6.Reviewed	9.
Information Code **0**		
1.Owner	4.Agent	7.
2.Relative	5.Estimate	8.
3.Tenant	6.Other	9.

Date Inspected

Additions, Outbuildings & Improvements

Type	Year	Units	Grade	Cond	Phys.	Funct.	Sound Value
					%	%	
					%	%	
					%	%	
					%	%	
					%	%	
					%	%	
					%	%	
					%	%	
					%	%	
					%	%	

1.One Story Fram
2.Two Story Fram
3.Three Story Fr
4.1 & 1/2 Story
5.1 & 3/4 Story
6.2 & 1/2 Story
21.Open Frame Por
22.Encl Frame Por
23.Frame Garage
24.Frame Shed
25.Frame Bay Wind
26.1SFr Overhang
27.Unfin Basement
28.Unfinished Att
29.Finished Attic

Map Lot 006-011 Account 387 Location 82 CARIBOU LAKE ROAD Card 1 Of 1 11/18/2020

CONLEY, DANIELLE E.

33 Cleveland Road

Saint Agatha ME 04772
B5776P207

Previous Owner
WILCOX, SHAWN M.
WILCOX, DANIELLE E.
82 CARIBOU LAKE ROAD
WASHBURN ME 04786
Sale Date: 9/20/2018

Previous Owner
WILCOX, DEREK D.
31 HAYWARD LANE

PRINCETON ME 04668
Sale Date: 8/01/2016

Previous Owner
Drake, Kenneth
Janice Adams
247 Station Road
Easton ME 04786
Sale Date: 8/30/2007

Inspection Witnessed By:

X Date

No./Date	Description	Date Insp.

Notes:

Washburn

Property Data

Neighborhood **1 Neighborhood One**

Tree Growth Year **0**

1ST MORTGAGE **0**

2ND MORTGAGE **0**

Zone/Land Use **1 Residential**

Secondary Zone

Topography **1 Level**

1.Level	4.Below St	7.LevelBog
2.Rolling	5.Low	8.
3.Above St	6.Swampy	9.

Utilities **4 Drilled Well** **6 Septic System**

1.Public	4.Dr Well	7.Cesspool
2.Water	5.Dug Well	8.
3.Sewer	6.Septic	9.None

Street **1 Paved**

1.Paved	4.Proposed	7.
2.Semi Imp	5.R/O/W	8.
3.Gravel	6.	9.None

TG PLAN YEAR **0**

Tif District # **0**

Sale Data

Sale Date **9/20/2018**

Price **76,000**

Sale Type **2 Land & Buildings**

1.Land	4.Mobile	7.C/I L&B
2.L & B	5.Other	8.
3.Building	6.C/I Land	9.

Financing **9 Unknown**

1.Convent	4.Seller	7.
2.FHA/VA	5.Private	8.
3.Assumed	6.Cash	9.Unknown

Validity **2 Related Parties**

1.Valid	4.Split	7.Renovate
2.Related	5.Partial	8.Other
3.Distress	6.Exempt	9.

Verified **5 Public Record**

1.Buyer	4.Agent	7.Family
2.Seller	5.Pub Rec	8.Other
3.Lender	6.MLS	9.

Assessment Record

Year	Land	Buildings	Exempt	Total
2007	6,500	76,100	18,000	64,600
2008	6,500	76,100	0	82,600
2009	6,500	76,100	9,000	73,600
2012	6,500	65,700	0	72,200
2013	8,500	65,700	0	74,200
2015	8,500	65,700	0	74,200
2018	8,500	66,600	18,400	56,700
2019	16,500	67,800	0	84,300
2020	16,500	67,500	0	84,000

Land Data

Front Foot	Type	Effective Frontage	Effective Depth	Influence Factor	Influence Code
11.Regular Lot				%	
12.Delta Triangle				%	
13.Nabla Triangle				%	
14.Rear Land				%	
15.Class I Road				%	
				%	
				%	
Square Foot		**Square Feet**			
16.Class II Road				%	
17.Municipal Rese				%	
18.Munic Sep Lago				%	
19.Gravel Pit				%	
20.Industrial Bas				%	
				%	
				%	
Fract. Acre		**Acreage/Sites**			
21.Developed Pave	21	1.00		100 %	0
22.Undev Paved (F				%	
23.Developed Grav				%	
Acres				%	
24.Undev Gravel (				%	
25.Comm Base Pave				%	
26.Comm Base Grav				%	
27.Backlot				%	
28.Rear Land				%	
29.Pavement				%	

Total Acreage 1.00

Influence Codes

1.Unimproved
2.Excess Frtg
3.Topography
4.Size/Shape
5.Access
6.Restriction
7.Open Space
8.View/Environ
9.Fract Share
Acres
30.Utility R O W
31.Tillable
32.Pasture
33.Orchard
34.Softwood F&O
35.Mixed Wood F&O
36.Hardwood F&O
37.Softwood TG
38.Mixed Wood TG
39.Hardwood TG
40.Wasteland
41.Open Space
42.Mobile Home Si
43.Condo Site
44.Lot Improvemen
45.Subdivision Lo
46.Heavy Ind Sit

Washburn

Map Lot 006-011 | Account 387 | Location 82 CARIBOU LAKE ROAD | Card 1 Of 1 | 11/18/2020

Building Style	**1 Conventional**		
1.Conv.	5.Garrison	9.Gambrel	
2.Ranch	6.Salt Box	10.Other	
3.R Ranch	7.Contemp	11.Split	
4.Cape	8.Log	12.	
Dwelling Units	**1**		
Other Units	**0**		
Stories	**2 Two Story**		
1.1	4.1.5	7.	
2.2	5.1.75	8.	
3.3	6.2.5	9.	
Exterior Walls	**2 Vinyl/Aluminum**		
1.Wood	5.Stucco	9.T-111	
2.Vin/Al	6.Brick	10.Other	
3.Compos.	7.Stone	11.	
4.Asbestos	8.Concrete	12.	
Roof Surface	**1 Asphalt Shingles**		
1.Asphalt	4.Composit	7.	
2.Slate	5.Wood	8.	
3.Metal	6.Other	9.	
SF Masonry Trim	**0**		
OPEN-3-CUSTOM	**0**		
OPEN-4-CUSTOM	**0**		
Year Built	**1950**		
Year Remodeled	**0**		
Foundation	**1 Concrete**		
1.Concrete	4.Wood	7.	
2.C Block	5.Slab	8.	
3.Br/Stone	6.Piers	9.	
Basement	**4 Full Basement**		
1.1/4 Bmt	4.Full Bmt	7.	
2.1/2 Bmt	5.None	8.	
3.3/4 Bmt	6.	9.None	
Bsmt Gar # Cars	**0**		
Wet Basement	**2 Damp Basement**		
1.Dry	4.	7.	
2.Damp	5.	8.	
3.Wet	6.	9.	

SF Bsmt Living	**0**		
Fin Bsmt Grade	**0 0**		
OPEN 5 OPTIONAL	**0**		
Heat Type	**100%**	**5 Forced Warm Air**	
1.HWBB	5.FWA	9.No Heat	
2.HWCI	6.GravWA	10.	
3.H Pump	7.Electric	11.	
4.Steam	8.Fl/Wall	12.	
Cool Type	**0%**	**9 None**	
1.Refrig	4.W&C Air	7.	
2.Evapor	5.	8.	
3.H Pump	6.	9.None	
Kitchen Style	**2 Typical**		
1.Modern	4.Obsolete	7.	
2.Typical	5.	8.	
3.Old Type	6.	9.None	
Bath(s) Style	**2 Typical Bath(s)**		
1.Modern	4.Obsolete	7.	
2.Typical	5.	8.	
3.Old Type	6.	9.None	
# Rooms	**6**		
# Bedrooms	**4**		
# Full Baths	**1**		
# Half Baths	**0**		
# Addn Fixtures	**0**		
# Fireplaces	**0**		

TRIO Software
A Division of Harris Computer Systems

Layout	**1 Typical**		
1.Typical	4.	7.	
2.Inadeq	5.	8.	
3.Poor	6.	9.	
Attic	**9 None**		
1.1/4 Fin	4.Full Fin	7.	
2.1/2 Fin	5.Fl/Stair	8.	
3.3/4 Fin	6.	9.None	
Insulation	**1 Full**		
1.Full	4.Minimal	7.	
2.Heavy	5.Partial	8.	
3.Capped	6.	9.None	
Unfinished %	**0%**		
Grade & Factor	**2 Fair 110%**		
1.E Grade	4.B Grade	7.	
2.D Grade	5.A Grade	8.SC Grade	
3.C Grade	6.AA Grade	9.Same	
SQFT (Footprint)	**672**		
Condition	**5 Above Average**		
1.Poor	4.Avg	7.V G	
2.Fair	5.Avg+	8.Exc	
3.Avg-	6.Good	9.Same	
Phys. % Good	**0%**		
Funct. % Good	**100%**		
Functional Code	**9 None**		
1.Incomp	4.Delap	7.No Power	
2.O-Built	5.Bsmt	8.LongTerm	
3.Damage	6.Common	9.None	
Econ. % Good	**100%**		
Economic Code	**None**		
0.None	3.No Power	7.	
1.Location	4.Generate	8.	
2.Encroach	9.None	9.	
Entrance Code	**3 Information Only**		
1.Interior	4.Vacant	7.	
2.Refusal	5.Estimate	8.	
3.Informed	6.Reviewed	9.	
Information Code	**3 Tenant**		
1.Owner	4.Agent	7.	
2.Relative	5.Estimate	8.	
3.Tenant	6.Other	9.	

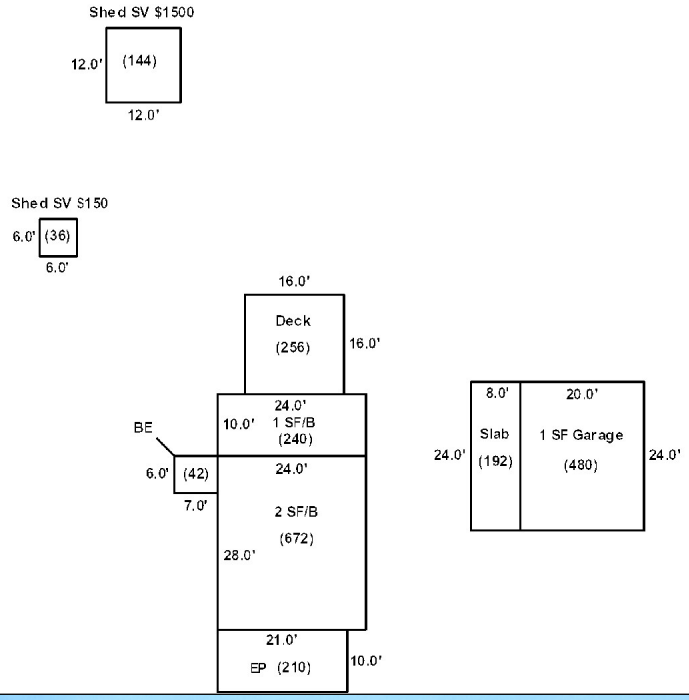

Date Inspected 9/25/2018

Additions, Outbuildings & Improvements

Type	Year	Units	Grade	Cond	Phys.	Funct.	Sound Value
22 Encl Frame Porch	1970	210	3 90	4	0 %	100 %	
20 1 Story/Bsmt	1950	240	3 100	4	0 %	100 %	
40 Basement Entry	1950	42	9 100	9	0 %	100 %	
68 Wood Deck	2000	256	3 100	3	0 %	100 %	
23 Frame Garage	1970	480	3 90	3	0 %	100 %	
24 Frame Shed	0				%	%	150
24 Frame Shed	0				%	%	1,500
48 Concrete Slab	1970	192	3 100	4	0 %	100 %	
					%	%	
					%	%	

1.One Story Fram
2.Two Story Fram
3.Three Story Fr
4.1 & 1/2 Story
5.1 & 3/4 Story
6.2 & 1/2 Story
21.Open Frame Por
22.Encl Frame Por
23.Frame Garage
24.Frame Shed
25.Frame Bay Wind
26.1SFr Overhang
27.Unfin Basement
28.Unfinished Att
29.Finished Attic

Map Lot 006-012 Account 123 Location 132 CARIBOU LAKE ROAD Card 1 Of 1 11/18/2020

SPARKS, VANESSA

c/o Deborah Gray
P.O. Box 509
PRESQUE ISLE ME 04769
B5324P48

Previous Owner
Jacob, Philip
132 Caribou Lake Road

Washburn ME 04786
Sale Date: 7/08/2014

Inspection Witnessed By:

X Date

No./Date	Description	Date Insp.

Notes:

Property Data

Neighborhood **1 Neighborhood One**

Tree Growth Year **0**

1ST MORTGAGE **0**

2ND MORTGAGE **0**

Zone/Land Use **1 Residential**

Secondary Zone

Topography **1 Level**

1.Level	4.Below St	7.LevelBog
2.Rolling	5.Low	8.
3.Above St	6.Swampy	9.

Utilities **4 Drilled Well** **6 Septic System**

1.Public	4.Dr Well	7.Cesspool
2.Water	5.Dug Well	8.
3.Sewer	6.Septic	9.None

Street **1 Paved**

1.Paved	4.Proposed	7.
2.Semi Imp	5.R/O/W	8.
3.Gravel	6.	9.None

TG PLAN YEAR **0**

Tif District # **0**

Sale Data

Sale Date **7/08/2014**

Price **15,000**

Sale Type **2 Land & Buildings**

1.Land	4.Mobile	7.C/I L&B
2.L & B	5.Other	8.
3.Building	6.C/I Land	9.

Financing

1.Convent	4.Seller	7.
2.FHA/VA	5.Private	8.
3.Assumed	6.Cash	9.Unknown

Validity **1 Arms Length Sale**

1.Valid	4.Split	7.Renovate
2.Related	5.Partial	8.Other
3.Distress	6.Exempt	9.

Verified **5 Public Record**

1.Buyer	4.Agent	7.Family
2.Seller	5.Pub Rec	8.Other
3.Lender	6.MLS	9.

Assessment Record

Year	Land	Buildings	Exempt	Total
2007	6,900	18,000	0	24,900
2008	6,900	18,000	0	24,900
2009	6,900	18,000	0	24,900
2012	6,900	18,000	0	24,900
2013	8,900	18,000	8,800	18,100
2015	8,900	18,000	9,000	17,900
2018	8,900	18,000	0	26,900
2019	16,900	17,200	0	34,100
2020	16,900	17,200	0	34,100

Land Data

Front Foot	Type	Effective Frontage	Effective Depth	Influence Factor	Influence Code
11.Regular Lot				%	
12.Delta Triangle				%	
13.Nabla Triangle				%	
14.Rear Land				%	
15.Class I Road				%	
				%	
				%	
Square Foot		**Square Feet**			
16.Class II Road				%	
17.Municipal Rese				%	
18.Munic Sep Lago				%	
19.Gravel Pit				%	
20.Industrial Bas				%	
				%	
				%	
Fract. Acre		**Acreage/Sites**			
21.Developed Pave	21	1.00	100	%	0
22.Undev Paved (F	28	0.70	100	%	0
23.Developed Grav				%	
Acres				%	
24.Undev Gravel (				%	
25.Comm Base Pave				%	
26.Comm Base Grav				%	
27.Backlot				%	
28.Rear Land				%	
29.Pavement				%	

Total Acreage 1.70

Influence Codes

1.Unimproved
2.Excess Frtg
3.Topography
4.Size/Shape
5.Access
6.Restriction
7.Open Space
8.View/Environ
9.Fract Share
Acres
30.Utility R O W
31.Tillable
32.Pasture
33.Orchard
34.Softwood F&O
35.Mixed Wood F&O
36.Hardwood F&O
37.Softwood TG
38.Mixed Wood TG
39.Hardwood TG
40.Wasteland
41.Open Space
42.Mobile Home Si
43.Condo Site
44.Lot Improvemen
45.Subdivision Lo
46.Heavy Ind Sit

Washburn

Washburn

Map Lot 006-012 | Account 123 | Location 132 CARIBOU LAKE ROAD | Card 1 Of 1 | 11/18/2020

Building Style **0**		
1.Conv.	5.Garrison	9.Gambrel
2.Ranch	6.Salt Box	10.Other
3.R Ranch	7.Contemp	11.Split
4.Cape	8.Log	12.
Dwelling Units **0**		
Other Units **0**		
Stories **0**		
1.1	4.1.5	7.
2.2	5.1.75	8.
3.3	6.2.5	9.
Exterior Walls **0**		
1.Wood	5.Stucco	9.T-111
2.Vin/Al	6.Brick	10.Other
3.Compos.	7.Stone	11.
4.Asbestos	8.Concrete	12.
Roof Surface **0**		
1.Asphalt	4.Composit	7.
2.Slate	5.Wood	8.
3.Metal	6.Other	9.
SF Masonry Trim **0**		
OPEN-3-CUSTOM **0**		
OPEN-4-CUSTOM **0**		
Year Built **0**		
Year Remodeled **0**		
Foundation **0**		
1.Concrete	4.Wood	7.
2.C Block	5.Slab	8.
3.Br/Stone	6.Piers	9.
Basement **0**		
1.1/4 Bmt	4.Full Bmt	7.
2.1/2 Bmt	5.None	8.
3.3/4 Bmt	6.	9.None
Bsmt Gar # Cars **0**		
Wet Basement **0**		
1.Dry	4.	7.
2.Damp	5.	8.
3.Wet	6.	9.

SF Bsmt Living **0**		
Fin Bsmt Grade **0 0**		
OPEN 5 OPTIONAL **0**		
Heat Type **100%** **0**		
1.HWBB	5.FWA	9.No Heat
2.HWCI	6.GravWA	10.
3.H Pump	7.Electric	11.
4.Steam	8.Fl/Wall	12.
Cool Type **0%** **9 None**		
1.Refrig	4.W&C Air	7.
2.Evapor	5.	8.
3.H Pump	6.	9.None
Kitchen Style **0**		
1.Modern	4.Obsolete	7.
2.Typical	5.	8.
3.Old Type	6.	9.None
Bath(s) Style **0**		
1.Modern	4.Obsolete	7.
2.Typical	5.	8.
3.Old Type	6.	9.None
# Rooms **0**		
# Bedrooms **0**		
# Full Baths **0**		
# Half Baths **0**		
# Addn Fixtures **0**		
# Fireplaces **0**		

TRIO Software
A Division of Harris Computer Systems

Layout **0**		
1.Typical	4.	7.
2.Inadeq	5.	8.
3.Poor	6.	9.
Attic **0**		
1.1/4 Fin	4.Full Fin	7.
2.1/2 Fin	5.Fl/Stair	8.
3.3/4 Fin	6.	9.None
Insulation **0**		
1.Full	4.Minimal	7.
2.Heavy	5.Partial	8.
3.Capped	6.	9.None
Unfinished % **0%**		
Grade & Factor **0 0%**		
1.E Grade	4.B Grade	7.
2.D Grade	5.A Grade	8.SC Grade
3.C Grade	6.AA Grade	9.Same
SQFT (Footprint) **0**		
Condition **0**		
1.Poor	4.Avg	7.V G
2.Fair	5.Avg+	8.Exc
3.Avg-	6.Good	9.Same
Phys. % Good **0%**		
Funct. % Good **100%**		
Functional Code **9 None**		
1.Incomp	4.Delap	7.No Power
2.O-Built	5.Bsmt	8.LongTerm
3.Damage	6.Common	9.None
Econ. % Good **100%**		
Economic Code **None**		
0.None	3.No Power	7.
1.Location	4.Generate	8.
2.Encroach	9.None	9.
Entrance Code **5 Estimated**		
1.Interior	4.Vacant	7.
2.Refusal	5.Estimate	8.
3.Informed	6.Reviewed	9.
Information Code **5 Estimate**		
1.Owner	4.Agent	7.
2.Relative	5.Estimate	8.
3.Tenant	6.Other	9.

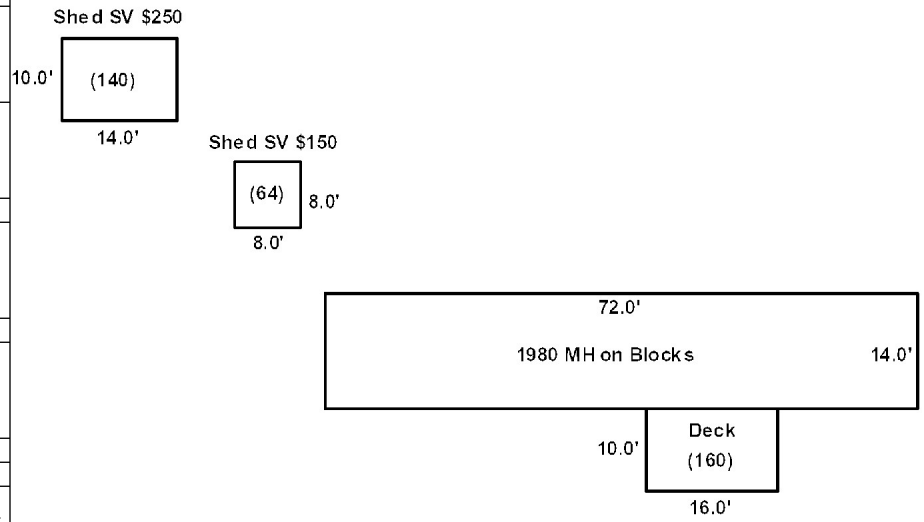

Date Inspected 9/25/2018

Additions, Outbuildings & Improvements

Type	Year	Units	Grade	Cond	Phys.	Funct.	Sound Value
998 14Mobile Home	1980	14x72	4 100	7	0 %	100 %	
68 Wood Deck	1990	160	3 90	3	0 %	100 %	
24 Frame Shed	0				%	%	150
24 Frame Shed	0				%	%	250
					%	%	
					%	%	
					%	%	
					%	%	
					%	%	
					%	%	

1.One Story Fram
2.Two Story Fram
3.Three Story Fr
4.1 & 1/2 Story
5.1 & 3/4 Story
6.2 & 1/2 Story
21.Open Frame Por
22.Encl Frame Por
23.Frame Garage
24.Frame Shed
25.Frame Bay Wind
26.1SFr Overhang
27.Unfin Basement
28.Unfinished Att
29.Finished Attic

Map Lot 006-013 | Account 988 | Location Caribou Lake Road | Card 1 Of 1 | 11/18/2020

Flewelling, Frederic N.
Flewelling, Patsy A.
P.O. Box 398

Crouseville ME 04738
B4535P334

Previous Owner
Umphrey, Michael
Umphrey, Lynn
P.O. Box 54
Washburn ME 04786
Sale Date: 1/04/2008

Inspection Witnessed By:

X Date

No./Date	Description	Date Insp.

Notes:

Washburn

Property Data

Neighborhood	**1 Neighborhood One**
Tree Growth Year	**0**
1ST MORTGAGE	**0**
2ND MORTGAGE	**0**
Zone/Land Use	**1 Residential**
Secondary Zone	
Topography	**1 Level**

1.Level	4.Below St	7.LevelBog
2.Rolling	5.Low	8.
3.Above St	6.Swampy	9.

Utilities

1.Public	4.Dr Well	7.Cesspool
2.Water	5.Dug Well	8.
3.Sewer	6.Septic	9.None

Street **1 Paved**

1.Paved	4.Proposed	7.
2.Semi Imp	5.R/O/W	8.
3.Gravel	6.	9.None

TG PLAN YEAR	**0**
Tif District #	**0**

Sale Data

Sale Date	**1/04/2008**
Price	**72,500**

Sale Type **1 Land Only**

1.Land	4.Mobile	7.C/I L&B
2.L & B	5.Other	8.
3.Building	6.C/I Land	9.

Financing **1 Conventional**

1.Convent	4.Seller	7.
2.FHA/VA	5.Private	8.
3.Assumed	6.Cash	9.Unknown

Validity **1 Arms Length Sale**

1.Valid	4.Split	7.Renovate
2.Related	5.Partial	8.Other
3.Distress	6.Exempt	9.

Verified **5 Public Record**

1.Buyer	4.Agent	7.Family
2.Seller	5.Pub Rec	8.Other
3.Lender	6.MLS	9.

Assessment Record

Year	Land	Buildings	Exempt	Total
2007	57,400	0	0	57,400
2008	47,600	0	0	47,600
2009	47,600	0	0	47,600
2012	47,600	0	0	47,600
2013	61,900	0	0	61,900
2015	61,900	0	0	61,900
2018	61,900	0	0	61,900
2019	121,200	0	0	121,200
2020	121,200	0	0	121,200

Land Data

Front Foot	Type	Effective Frontage	Effective Depth	Influence Factor	Influence Code
11.Regular Lot				%	
12.Delta Triangle				%	
13.Nabla Triangle				%	
14.Rear Land				%	
15.Class I Road				%	
				%	
				%	
Square Foot		**Square Feet**			
16.Class II Road				%	
17.Municipal Rese				%	
18.Munic Sep Lago				%	
19.Gravel Pit				%	
20.Industrial Bas				%	
				%	
				%	
Fract. Acre		**Acreage/Sites**			
21.Developed Pave	31	99.20	100	%	0
22.Undev Paved (F	22	1.00	100	%	0
23.Developed Grav	28	25.90	100	%	0
Acres				%	
24.Undev Gravel (				%	
25.Comm Base Pave				%	
26.Comm Base Grav				%	
27.Backlot				%	
28.Rear Land				%	
29.Pavement				%	

Total Acreage 126.10

Influence Codes

1.Unimproved
2.Excess Frtg
3.Topography
4.Size/Shape
5.Access
6.Restriction
7.Open Space
8.View/Environ
9.Fract Share
Acres
30.Utility R O W
31.Tillable
32.Pasture
33.Orchard
34.Softwood F&O
35.Mixed Wood F&O
36.Hardwood F&O
37.Softwood TG
38.Mixed Wood TG
39.Hardwood TG
40.Wasteland
41.Open Space
42.Mobile Home Si
43.Condo Site
44.Lot Improvemen
45.Subdivision Lo
46.Heavy Ind Sit

Washburn

Map Lot 006-013 | Account 988 | Location Caribou Lake Road | Card 1 Of 1 | 11/18/2020

Building Style **0**		
1.Conv.	5.Garrison	9.Gambrel
2.Ranch	6.Salt Box	10.Other
3.R Ranch	7.Contemp	11.Split
4.Cape	8.Log	12.
Dwelling Units **0**		
Other Units **0**		
Stories **0**		
1.1	4.1.5	7.
2.2	5.1.75	8.
3.3	6.2.5	9.
Exterior Walls **0**		
1.Wood	5.Stucco	9.T-111
2.Vin/Al	6.Brick	10.Other
3.Compos.	7.Stone	11.
4.Asbestos	8.Concrete	12.
Roof Surface **0**		
1.Asphalt	4.Composit	7.
2.Slate	5.Wood	8.
3.Metal	6.Other	9.
SF Masonry Trim **0**		
OPEN-3-CUSTOM **0**		
OPEN-4-CUSTOM **0**		
Year Built **0**		
Year Remodeled **0**		
Foundation **0**		
1.Concrete	4.Wood	7.
2.C Block	5.Slab	8.
3.Br/Stone	6.Piers	9.
Basement **0**		
1.1/4 Bmt	4.Full Bmt	7.
2.1/2 Bmt	5.None	8.
3.3/4 Bmt	6.	9.None
Bsmt Gar # Cars **0**		
Wet Basement **0**		
1.Dry	4.	7.
2.Damp	5.	8.
3.Wet	6.	9.

SF Bsmt Living **0**		
Fin Bsmt Grade **0 0**		
OPEN 5 OPTIONAL **0**		
Heat Type **100%** **0**		
1.HWBB	5.FWA	9.No Heat
2.HWCI	6.GravWA	10.
3.H Pump	7.Electric	11.
4.Steam	8.Fl/Wall	12.
Cool Type **0%** **9 None**		
1.Refrig	4.W&C Air	7.
2.Evapor	5.	8.
3.H Pump	6.	9.None
Kitchen Style **0**		
1.Modern	4.Obsolete	7.
2.Typical	5.	8.
3.Old Type	6.	9.None
Bath(s) Style **0**		
1.Modern	4.Obsolete	7.
2.Typical	5.	8.
3.Old Type	6.	9.None
# Rooms **0**		
# Bedrooms **0**		
# Full Baths **0**		
# Half Baths **0**		
# Addn Fixtures **0**		
# Fireplaces **0**		

TRIO Software
A Division of Harris Computer Systems

Layout **0**		
1.Typical	4.	7.
2.Inadeq	5.	8.
3.Poor	6.	9.
Attic **0**		
1.1/4 Fin	4.Full Fin	7.
2.1/2 Fin	5.Fl/Stair	8.
3.3/4 Fin	6.	9.None
Insulation **0**		
1.Full	4.Minimal	7.
2.Heavy	5.Partial	8.
3.Capped	6.	9.None
Unfinished % **0%**		
Grade & Factor **0 0%**		
1.E Grade	4.B Grade	7.
2.D Grade	5.A Grade	8.SC Grade
3.C Grade	6.AA Grade	9.Same
SQFT (Footprint) **0**		
Condition **0**		
1.Poor	4.Avg	7.V G
2.Fair	5.Avg+	8.Exc
3.Avg-	6.Good	9.Same
Phys. % Good **0%**		
Funct. % Good **100%**		
Functional Code **9 None**		
1.Incomp	4.Delap	7.No Power
2.O-Built	5.Bsmt	8.LongTerm
3.Damage	6.Common	9.None
Econ. % Good **100%**		
Economic Code **None**		
0.None	3.No Power	7.
1.Location	4.Generate	8.
2.Encroach	9.None	9.
Entrance Code **0**		
1.Interior	4.Vacant	7.
2.Refusal	5.Estimate	8.
3.Informed	6.Reviewed	9.
Information Code **0**		
1.Owner	4.Agent	7.
2.Relative	5.Estimate	8.
3.Tenant	6.Other	9.

Date Inspected

Additions, Outbuildings & Improvements

Type	Year	Units	Grade	Cond	Phys.	Funct.	Sound Value
					%	%	
					%	%	
					%	%	
					%	%	
					%	%	
					%	%	
					%	%	
					%	%	
					%	%	
					%	%	

1.One Story Fram
2.Two Story Fram
3.Three Story Fr
4.1 & 1/2 Story
5.1 & 3/4 Story
6.2 & 1/2 Story
21.Open Frame Por
22.Encl Frame Por
23.Frame Garage
24.Frame Shed
25.Frame Bay Wind
26.1SFr Overhang
27.Unfin Basement
28.Unfinished Att
29.Finished Attic

Map Lot 006-013A | Account 357 | Location 176 CARIBOU LAKE ROAD | Card 1 Of 1 | 11/18/2020

HATT, ALEXANDER W.
HATT, KAREN G.
P.O. BOX 474

CROUSEVILLE ME 04738
B3751P223 B5445P73

Property Data

Neighborhood **1 Neighborhood One**

Tree Growth Year **0**

1ST MORTGAGE **0**

2ND MORTGAGE **0**

Zone/Land Use **1 Residential**

Secondary Zone

Topography **1 Level**

1.Level	4.Below St	7.LevelBog
2.Rolling	5.Low	8.
3.Above St	6.Swampy	9.

Utilities **4 Drilled Well** **6 Septic System**

1.Public	4.Dr Well	7.Cesspool
2.Water	5.Dug Well	8.
3.Sewer	6.Septic	9.None

Street **1 Paved**

1.Paved	4.Proposed	7.
2.Semi Imp	5.R/O/W	8.
3.Gravel	6.	9.None

TG PLAN YEAR **0**

Tif District # **0**

Sale Data

Sale Date **12/03/2002**

Price

Sale Type **2 Land & Buildings**

1.Land	4.Mobile	7.C/I L&B
2.L & B	5.Other	8.
3.Building	6.C/I Land	9.

Financing **1 Conventional**

1.Convent	4.Seller	7.
2.FHA/VA	5.Private	8.
3.Assumed	6.Cash	9.Unknown

Validity **2 Related Parties**

1.Valid	4.Split	7.Renovate
2.Related	5.Partial	8.Other
3.Distress	6.Exempt	9.

Verified **5 Public Record**

1.Buyer	4.Agent	7.Family
2.Seller	5.Pub Rec	8.Other
3.Lender	6.MLS	9.

Assessment Record

Year	Land	Buildings	Exempt	Total
2007	6,800	14,700	13,000	8,500
2008	6,800	14,700	13,000	8,500
2009	6,800	14,700	9,000	12,500
2012	6,800	14,700	8,800	12,700
2013	8,800	14,700	8,800	14,700
2015	8,800	14,700	9,000	14,500
2018	8,800	14,700	18,400	5,100
2019	16,800	10,400	20,000	7,200
2020	16,800	10,400	25,000	2,200

Land Data

Front Foot	Type	Effective Frontage	Effective Depth	Influence Factor	Influence Code
11.Regular Lot				%	
12.Delta Triangle				%	
13.Nabla Triangle				%	
14.Rear Land				%	
15.Class I Road				%	
				%	
				%	
Square Foot		**Square Feet**			
16.Class II Road				%	
17.Municipal Rese				%	
18.Munic Sep Lago				%	
19.Gravel Pit				%	
20.Industrial Bas				%	
				%	
				%	
Fract. Acre		**Acreage/Sites**			
21.Developed Pave	21	1.00	100	%	0
22.Undev Paved (F	28	0.50	100	%	0
23.Developed Grav				%	
Acres				%	
24.Undev Gravel (				%	
25.Comm Base Pave				%	
26.Comm Base Grav				%	
27.Backlot				%	
28.Rear Land				%	
29.Pavement				%	

Total Acreage 1.50

Influence Codes

1.Unimproved
2.Excess Frtg
3.Topography
4.Size/Shape
5.Access
6.Restriction
7.Open Space
8.View/Environ
9.Fract Share
Acres
30.Utility R O W
31.Tillable
32.Pasture
33.Orchard
34.Softwood F&O
35.Mixed Wood F&O
36.Hardwood F&O
37.Softwood TG
38.Mixed Wood TG
39.Hardwood TG
40.Wasteland
41.Open Space
42.Mobile Home Si
43.Condo Site
44.Lot Improvemen
45.Subdivision Lo
46.Heavy Ind Sit

Inspection Witnessed By:

X Date

No./Date	Description	Date Insp.

Notes:

Washburn

Washburn

Map Lot 006-013A | Account 357 | Location 176 CARIBOU LAKE ROAD | Card 1 Of 1 | 11/18/2020

Building Style **0**		
1.Conv.	5.Garrison	9.Gambrel
2.Ranch	6.Salt Box	10.Other
3.R Ranch	7.Contemp	11.Split
4.Cape	8.Log	12.
Dwelling Units **0**		
Other Units **0**		
Stories **0**		
1.1	4.1.5	7.
2.2	5.1.75	8.
3.3	6.2.5	9.
Exterior Walls **0**		
1.Wood	5.Stucco	9.T-111
2.Vin/Al	6.Brick	10.Other
3.Compos.	7.Stone	11.
4.Asbestos	8.Concrete	12.
Roof Surface **0**		
1.Asphalt	4.Composit	7.
2.Slate	5.Wood	8.
3.Metal	6.Other	9.
SF Masonry Trim **0**		
OPEN-3-CUSTOM **0**		
OPEN-4-CUSTOM **0**		
Year Built **0**		
Year Remodeled **0**		
Foundation **0**		
1.Concrete	4.Wood	7.
2.C Block	5.Slab	8.
3.Br/Stone	6.Piers	9.
Basement **0**		
1.1/4 Bmt	4.Full Bmt	7.
2.1/2 Bmt	5.None	8.
3.3/4 Bmt	6.	9.None
Bsmt Gar # Cars **0**		
Wet Basement **0**		
1.Dry	4.	7.
2.Damp	5.	8.
3.Wet	6.	9.

SF Bsmt Living **0**		
Fin Bsmt Grade **0 0**		
OPEN 5 OPTIONAL **0**		
Heat Type **100%** **0**		
1.HWBB	5.FWA	9.No Heat
2.HWCI	6.GravWA	10.
3.H Pump	7.Electric	11.
4.Steam	8.Fl/Wall	12.
Cool Type **0%** **9 None**		
1.Refrig	4.W&C Air	7.
2.Evapor	5.	8.
3.H Pump	6.	9.None
Kitchen Style **0**		
1.Modern	4.Obsolete	7.
2.Typical	5.	8.
3.Old Type	6.	9.None
Bath(s) Style **0**		
1.Modern	4.Obsolete	7.
2.Typical	5.	8.
3.Old Type	6.	9.None
# Rooms **0**		
# Bedrooms **0**		
# Full Baths **0**		
# Half Baths **0**		
# Addn Fixtures **0**		
# Fireplaces **0**		

TRIO Software
A Division of Harris Computer Systems

Layout **0**		
1.Typical	4.	7.
2.Inadeq	5.	8.
3.Poor	6.	9.
Attic **0**		
1.1/4 Fin	4.Full Fin	7.
2.1/2 Fin	5.Fl/Stair	8.
3.3/4 Fin	6.	9.None
Insulation **0**		
1.Full	4.Minimal	7.
2.Heavy	5.Partial	8.
3.Capped	6.	9.None
Unfinished % **0%**		
Grade & Factor **0 0%**		
1.E Grade	4.B Grade	7.
2.D Grade	5.A Grade	8.SC Grade
3.C Grade	6.AA Grade	9.Same
SQFT (Footprint) **0**		
Condition **0**		
1.Poor	4.Avg	7.V G
2.Fair	5.Avg+	8.Exc
3.Avg-	6.Good	9.Same
Phys. % Good **0%**		
Funct. % Good **100%**		
Functional Code **9 None**		
1.Incomp	4.Delap	7.No Power
2.O-Built	5.Bsmt	8.LongTerm
3.Damage	6.Common	9.None
Econ. % Good **100%**		
Economic Code **None**		
0.None	3.No Power	7.
1.Location	4.Generate	8.
2.Encroach	9.None	9.
Entrance Code **5 Estimated**		
1.Interior	4.Vacant	7.
2.Refusal	5.Estimate	8.
3.Informed	6.Reviewed	9.
Information Code **5 Estimate**		
1.Owner	4.Agent	7.
2.Relative	5.Estimate	8.
3.Tenant	6.Other	9.

Date Inspected 9/25/2018

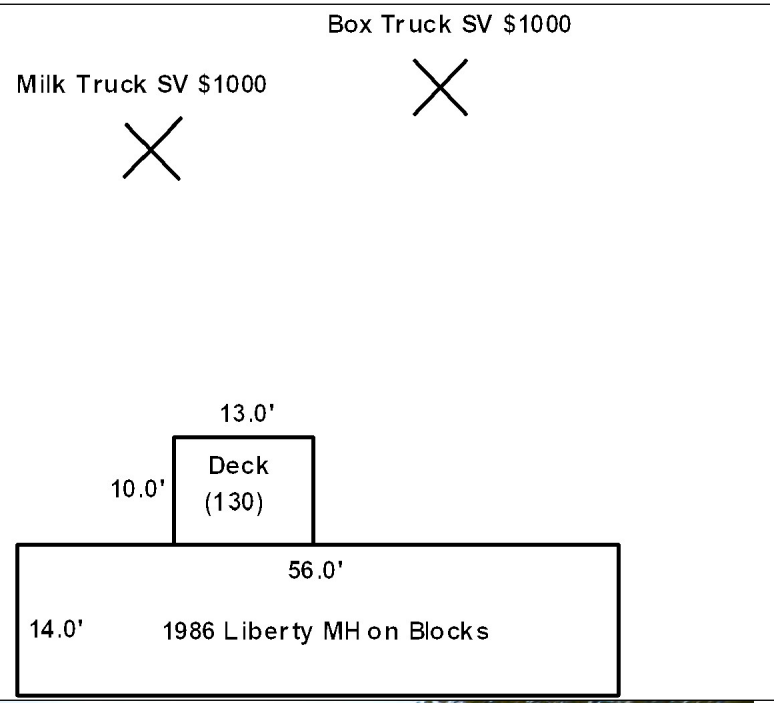

Additions, Outbuildings & Improvements

Type	Year	Units	Grade	Cond	Phys.	Funct.	Sound Value
842 Liberty M/H	1986	14x56	4 100	5	0 %	100 %	
68 Wood Deck	2000	130	3 95	3	0 %	100 %	
24 Frame Shed	0				%	%	1,000
24 Frame Shed	0				%	%	1,000
					%	%	
					%	%	
					%	%	
					%	%	
					%	%	
					%	%	

1.One Story Fram
2.Two Story Fram
3.Three Story Fr
4.1 & 1/2 Story
5.1 & 3/4 Story
6.2 & 1/2 Story
21.Open Frame Por
22.Encl Frame Por
23.Frame Garage
24.Frame Shed
25.Frame Bay Wind
26.1SFr Overhang
27.Unfin Basement
28.Unfinished Att
29.Finished Attic

Map Lot 006-014 Account 644 Location 206 CARIBOU LAKE ROAD Card 1 Of 1 11/18/2020

ROIX, TIMOTHY R.

P.O. BOX 403

PRESQUE ISLE ME 04769
B2731P1 B3876P300 B5701P119

Property Data

Neighborhood **1 Neighborhood One**

Tree Growth Year **0**

1ST MORTGAGE **0**

2ND MORTGAGE **0**

Zone/Land Use **1 Residential**

Secondary Zone

Topography **1 Level**

1.Level	4.Below St	7.LevelBog
2.Rolling	5.Low	8.
3.Above St	6.Swampy	9.

Utilities **4 Drilled Well** **6 Septic System**

1.Public	4.Dr Well	7.Cesspool
2.Water	5.Dug Well	8.
3.Sewer	6.Septic	9.None

Street **1 Paved**

1.Paved	4.Proposed	7.
2.Semi Imp	5.R/O/W	8.
3.Gravel	6.	9.None

TG PLAN YEAR **0**

Tif District # **0**

Sale Data

Sale Date **9/07/1994**

Price

Sale Type **2 Land & Buildings**

1.Land	4.Mobile	7.C/I L&B
2.L & B	5.Other	8.
3.Building	6.C/I Land	9.

Financing **1 Conventional**

1.Convent	4.Seller	7.
2.FHA/VA	5.Private	8.
3.Assumed	6.Cash	9.Unknown

Validity **3 Distressed Sale**

1.Valid	4.Split	7.Renovate
2.Related	5.Partial	8.Other
3.Distress	6.Exempt	9.

Verified **5 Public Record**

1.Buyer	4.Agent	7.Family
2.Seller	5.Pub Rec	8.Other
3.Lender	6.MLS	9.

Assessment Record

Year	Land	Buildings	Exempt	Total
2007	6,200	72,900	13,000	66,100
2008	6,200	72,900	13,000	66,100
2009	6,200	72,900	9,000	70,100
2012	6,200	72,900	8,800	70,300
2013	8,100	72,900	8,800	72,200
2015	8,100	72,900	9,000	72,000
2018	8,100	72,900	18,400	62,600
2019	15,900	72,300	20,000	68,200
2020	15,900	72,300	25,000	63,200

Land Data

Front Foot	Type	Effective Frontage	Effective Depth	Influence Factor	Influence Code
11.Regular Lot				%	
12.Delta Triangle				%	
13.Nabla Triangle				%	
14.Rear Land				%	
15.Class I Road				%	
				%	
				%	
Square Foot		**Square Feet**			
16.Class II Road				%	
17.Municipal Rese				%	
18.Munic Sep Lago				%	
19.Gravel Pit				%	
20.Industrial Bas				%	
				%	
				%	
Fract. Acre		**Acreage/Sites**			
21.Developed Pave	21	0.93		100 %	0
22.Undev Paved (F				%	
23.Developed Grav				%	
Acres				%	
24.Undev Gravel (				%	
25.Comm Base Pave				%	
26.Comm Base Grav				%	
27.Backlot				%	
28.Rear Land				%	
29.Pavement				%	

Total Acreage 0.93

Influence Codes

1.Unimproved
2.Excess Frtg
3.Topography
4.Size/Shape
5.Access
6.Restriction
7.Open Space
8.View/Environ
9.Fract Share
Acres
30.Utility R O W
31.Tillable
32.Pasture
33.Orchard
34.Softwood F&O
35.Mixed Wood F&O
36.Hardwood F&O
37.Softwood TG
38.Mixed Wood TG
39.Hardwood TG
40.Wasteland
41.Open Space
42.Mobile Home Si
43.Condo Site
44.Lot Improvemen
45.Subdivision Lo
46.Heavy Ind Sit

Inspection Witnessed By:

X Date

No./Date	Description	Date Insp.

Notes:

Washburn

Washburn

Map Lot 006-014 | Account 644 | Location 206 CARIBOU LAKE ROAD | Card 1 Of 1 | 11/18/2020

Building Style	**4 Cape Cod**	
1.Conv.	5.Garrison	9.Gambrel
2.Ranch	6.Salt Box	10.Other
3.R Ranch	7.Contemp	11.Split
4.Cape	8.Log	12.
Dwelling Units	**1**	
Other Units	**0**	
Stories	**4 One & 1/2 Story**	
1.1	4.1.5	7.
2.2	5.1.75	8.
3.3	6.2.5	9.
Exterior Walls	**1 Wood Siding**	
1.Wood	5.Stucco	9.T-111
2.Vin/Al	6.Brick	10.Other
3.Compos.	7.Stone	11.
4.Asbestos	8.Concrete	12.
Roof Surface	**1 Asphalt Shingles**	
1.Asphalt	4.Composit	7.
2.Slate	5.Wood	8.
3.Metal	6.Other	9.
SF Masonry Trim	**0**	
OPEN-3-CUSTOM	**0**	
OPEN-4-CUSTOM	**0**	
Year Built	**1920**	
Year Remodeled	**1995**	
Foundation	**1 Concrete**	
1.Concrete	4.Wood	7.
2.C Block	5.Slab	8.
3.Br/Stone	6.Piers	9.
Basement	**3 3/4 Basement**	
1.1/4 Bmt	4.Full Bmt	7.
2.1/2 Bmt	5.None	8.
3.3/4 Bmt	6.	9.None
Bsmt Gar # Cars	**0**	
Wet Basement	**1 Dry Basement**	
1.Dry	4.	7.
2.Damp	5.	8.
3.Wet	6.	9.

SF Bsmt Living	**0**	
Fin Bsmt Grade	**0 0**	
OPEN 5 OPTIONAL	**0**	
Heat Type	**100%**	**1 Hot Water BB**
1.HWBB	5.FWA	9.No Heat
2.HWCI	6.GravWA	10.
3.H Pump	7.Electric	11.
4.Steam	8.Fl/Wall	12.
Cool Type	**50%**	**3 Heat Pump**
1.Refrig	4.W&C Air	7.
2.Evapor	5.	8.
3.H Pump	6.	9.None
Kitchen Style	**2 Typical**	
1.Modern	4.Obsolete	7.
2.Typical	5.	8.
3.Old Type	6.	9.None
Bath(s) Style	**2 Typical Bath(s)**	
1.Modern	4.Obsolete	7.
2.Typical	5.	8.
3.Old Type	6.	9.None
# Rooms	**6**	
# Bedrooms	**3**	
# Full Baths	**2**	
# Half Baths	**0**	
# Addn Fixtures	**0**	
# Fireplaces	**0**	

TRIO Software
A Division of Harris Computer Systems

Layout	**1 Typical**	
1.Typical	4.	7.
2.Inadeq	5.	8.
3.Poor	6.	9.
Attic	**9 None**	
1.1/4 Fin	4.Full Fin	7.
2.1/2 Fin	5.Fl/Stair	8.
3.3/4 Fin	6.	9.None
Insulation	**1 Full**	
1.Full	4.Minimal	7.
2.Heavy	5.Partial	8.
3.Capped	6.	9.None
Unfinished %	**0%**	
Grade & Factor	**3 Average 110%**	
1.E Grade	4.B Grade	7.
2.D Grade	5.A Grade	8.SC Grade
3.C Grade	6.AA Grade	9.Same
SQFT (Footprint)	**976**	
Condition	**6 Good**	
1.Poor	4.Avg	7.V G
2.Fair	5.Avg+	8.Exc
3.Avg-	6.Good	9.Same
Phys. % Good	**0%**	
Funct. % Good	**100%**	
Functional Code	**9 None**	
1.Incomp	4.Delap	7.No Power
2.O-Built	5.Bsmt	8.LongTerm
3.Damage	6.Common	9.None
Econ. % Good	**100%**	
Economic Code	**None**	
0.None	3.No Power	7.
1.Location	4.Generate	8.
2.Encroach	9.None	9.
Entrance Code	**5 Estimated**	
1.Interior	4.Vacant	7.
2.Refusal	5.Estimate	8.
3.Informed	6.Reviewed	9.
Information Code	**5 Estimate**	
1.Owner	4.Agent	7.
2.Relative	5.Estimate	8.
3.Tenant	6.Other	9.

Date Inspected 9/25/2018

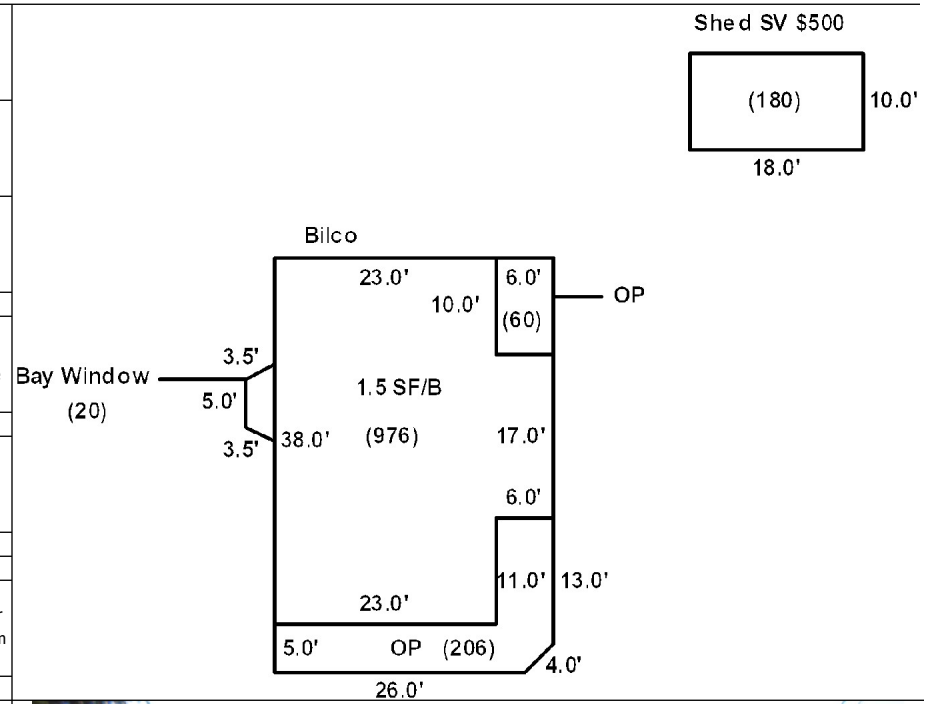

Additions, Outbuildings & Improvements

Type	Year	Units	Grade	Cond	Phys.	Funct.	Sound Value
21 Open Frame	1950	206	3 105	5	0 %	100 %	
21 Open Frame	1950	60	3 100	5	0 %	100 %	
25 Frame Bay	1950	20	9 100	9	0 %	100 %	
24 Frame Shed	0				%	%	500
					%	%	
					%	%	
					%	%	
					%	%	
					%	%	
					%	%	

1.One Story Fram
2.Two Story Fram
3.Three Story Fr
4.1 & 1/2 Story
5.1 & 3/4 Story
6.2 & 1/2 Story
21.Open Frame Por
22.Encl Frame Por
23.Frame Garage
24.Frame Shed
25.Frame Bay Wind
26.1SFr Overhang
27.Unfin Basement
28.Unfinished Att
29.Finished Attic

Map Lot 006-015 | Account 541 | Location CARIBOU LAKE ROAD | Card 1 Of 1 | 11/18/2020

IRVING, SCOTT K.

P.O. BOX 667

CARIBOU ME 04736
B5223P344 B5258P100

Property Data

Neighborhood	**1 Neighborhood One**
Tree Growth Year	**0**
1ST MORTGAGE	**0**
2ND MORTGAGE	**0**
Zone/Land Use	**1 Residential**
Secondary Zone	
Topography	**1 Level**

1.Level	4.Below St	7.LevelBog
2.Rolling	5.Low	8.
3.Above St	6.Swampy	9.

Utilities

1.Public	4.Dr Well	7.Cesspool
2.Water	5.Dug Well	8.
3.Sewer	6.Septic	9.None

Street **1 Paved**

1.Paved	4.Proposed	7.
2.Semi Imp	5.R/O/W	8.
3.Gravel	6.	9.None

TG PLAN YEAR	**0**
Tif District #	**0**

Sale Data

Sale Date	**8/22/2013**
Price	**370,000**
Sale Type	**2 Land & Buildings**

1.Land	4.Mobile	7.C/I L&B
2.L & B	5.Other	8.
3.Building	6.C/I Land	9.

Financing **1 Conventional**

1.Convent	4.Seller	7.
2.FHA/VA	5.Private	8.
3.Assumed	6.Cash	9.Unknown

Validity **2 Related Parties**

1.Valid	4.Split	7.Renovate
2.Related	5.Partial	8.Other
3.Distress	6.Exempt	9.

Verified **5 Public Record**

1.Buyer	4.Agent	7.Family
2.Seller	5.Pub Rec	8.Other
3.Lender	6.MLS	9.

Assessment Record

Year	Land	Buildings	Exempt	Total
2007	154,300	3,400	0	157,700
2008	154,300	3,400	0	157,700
2009	154,300	3,400	0	157,700
2012	154,300	3,400	0	157,700
2013	200,600	3,400	0	204,000
2015	200,600	3,400	0	204,000
2018	200,600	3,400	0	204,000
2019	390,500	5,000	0	395,500
2020	390,500	5,000	0	395,500

Land Data

Front Foot	Type	Effective Frontage	Effective Depth	Influence Factor	Influence Code
11.Regular Lot				%	
12.Delta Triangle				%	
13.Nabla Triangle				%	
14.Rear Land				%	
15.Class I Road				%	
				%	
				%	
Square Foot		**Square Feet**			
16.Class II Road				%	
17.Municipal Rese				%	
18.Munic Sep Lago				%	
19.Gravel Pit				%	
20.Industrial Bas				%	
				%	
				%	
Fract. Acre		**Acreage/Sites**			
21.Developed Pave	22	1.00	100	%	0
22.Undev Paved (F	28	29.53	100	%	0
23.Developed Grav	31	366.75	100	%	0
Acres				%	
24.Undev Gravel (				%	
25.Comm Base Pave				%	
26.Comm Base Grav				%	
27.Backlot				%	
28.Rear Land				%	
29.Pavement				%	

Total Acreage 397.28

Influence Codes

1.Unimproved
2.Excess Frtg
3.Topography
4.Size/Shape
5.Access
6.Restriction
7.Open Space
8.View/Environ
9.Fract Share
Acres
30.Utility R O W
31.Tillable
32.Pasture
33.Orchard
34.Softwood F&O
35.Mixed Wood F&O
36.Hardwood F&O
37.Softwood TG
38.Mixed Wood TG
39.Hardwood TG
40.Wasteland
41.Open Space
42.Mobile Home Si
43.Condo Site
44.Lot Improvemen
45.Subdivision Lo
46.Heavy Ind Sit

Inspection Witnessed By:

X Date

No./Date	Description	Date Insp.

Notes:

Washburn

Washburn

Map Lot 006-015 | Account 541 | Location CARIBOU LAKE ROAD | Card 1 Of 1 | 11/18/2020

20' Grain Siloh

(440)

Building Style **0**		
1.Conv.	5.Garrison	9.Gambrel
2.Ranch	6.Salt Box	10.Other
3.R Ranch	7.Contemp	11.Split
4.Cape	8.Log	12.
Dwelling Units **0**		
Other Units **0**		
Stories **0**		
1.1	4.1.5	7.
2.2	5.1.75	8.
3.3	6.2.5	9.
Exterior Walls **0**		
1.Wood	5.Stucco	9.T-111
2.Vin/Al	6.Brick	10.Other
3.Compos.	7.Stone	11.
4.Asbestos	8.Concrete	12.
Roof Surface **0**		
1.Asphalt	4.Composit	7.
2.Slate	5.Wood	8.
3.Metal	6.Other	9.
SF Masonry Trim **0**		
OPEN-3-CUSTOM **0**		
OPEN-4-CUSTOM **0**		
Year Built **0**		
Year Remodeled **0**		
Foundation **0**		
1.Concrete	4.Wood	7.
2.C Block	5.Slab	8.
3.Br/Stone	6.Piers	9.
Basement **0**		
1.1/4 Bmt	4.Full Bmt	7.
2.1/2 Bmt	5.None	8.
3.3/4 Bmt	6.	9.None
Bsmt Gar # Cars **0**		
Wet Basement **0**		
1.Dry	4.	7.
2.Damp	5.	8.
3.Wet	6.	9.

SF Bsmt Living **0**		
Fin Bsmt Grade **0 0**		
OPEN 5 OPTIONAL **0**		
Heat Type **100%** **0**		
1.HWBB	5.FWA	9.No Heat
2.HWCI	6.GravWA	10.
3.H Pump	7.Electric	11.
4.Steam	8.Fl/Wall	12.
Cool Type **0%** **9 None**		
1.Refrig	4.W&C Air	7.
2.Evapor	5.	8.
3.H Pump	6.	9.None
Kitchen Style **0**		
1.Modern	4.Obsolete	7.
2.Typical	5.	8.
3.Old Type	6.	9.None
Bath(s) Style **0**		
1.Modern	4.Obsolete	7.
2.Typical	5.	8.
3.Old Type	6.	9.None
# Rooms **0**		
# Bedrooms **0**		
# Full Baths **0**		
# Half Baths **0**		
# Addn Fixtures **0**		
# Fireplaces **0**		

TRIO Software
A Division of Harris Computer Systems

Layout **0**		
1.Typical	4.	7.
2.Inadeq	5.	8.
3.Poor	6.	9.
Attic **0**		
1.1/4 Fin	4.Full Fin	7.
2.1/2 Fin	5.Fl/Stair	8.
3.3/4 Fin	6.	9.None
Insulation **0**		
1.Full	4.Minimal	7.
2.Heavy	5.Partial	8.
3.Capped	6.	9.None
Unfinished % **0%**		
Grade & Factor **0 0%**		
1.E Grade	4.B Grade	7.
2.D Grade	5.A Grade	8.SC Grade
3.C Grade	6.AA Grade	9.Same
SQFT (Footprint) **0**		
Condition **0**		
1.Poor	4.Avg	7.V G
2.Fair	5.Avg+	8.Exc
3.Avg-	6.Good	9.Same
Phys. % Good **0%**		
Funct. % Good **100%**		
Functional Code **9 None**		
1.Incomp	4.Delap	7.No Power
2.O-Built	5.Bsmt	8.LongTerm
3.Damage	6.Common	9.None
Econ. % Good **100%**		
Economic Code **None**		
0.None	3.No Power	7.
1.Location	4.Generate	8.
2.Encroach	9.None	9.
Entrance Code **5 Estimated**		
1.Interior	4.Vacant	7.
2.Refusal	5.Estimate	8.
3.Informed	6.Reviewed	9.
Information Code **5 Estimate**		
1.Owner	4.Agent	7.
2.Relative	5.Estimate	8.
3.Tenant	6.Other	9.

Date Inspected 9/24/2018

Additions, Outbuildings & Improvements

Type	Year	Units	Grade	Cond	Phys.	Funct.	Sound Value
505 Silo 20 Base/Hi	1970				%	%	5,000
					%	%	
					%	%	
					%	%	
					%	%	
					%	%	
					%	%	
					%	%	
					%	%	
					%	%	

1.One Story Fram
2.Two Story Fram
3.Three Story Fr
4.1 & 1/2 Story
5.1 & 3/4 Story
6.2 & 1/2 Story
21.Open Frame Por
22.Encl Frame Por
23.Frame Garage
24.Frame Shed
25.Frame Bay Wind
26.1SFr Overhang
27.Unfin Basement
28.Unfinished Att
29.Finished Attic

Map Lot 006-015A | Account 153 | Location 240 CARIBOU LAKE ROAD | Card 1 Of 1 | 11/18/2020

TURNER, AARON B.

P.O. BOX 264

WASHBURN ME 04786
B5134P92 B5134P95 B5433P303

Previous Owner
Turner, Dale A.
Turner, Cynthia E.
30 Tabor Road
Washburn ME 04786
Sale Date: 12/12/2012

Inspection Witnessed By:

X Date

No./Date	Description	Date Insp.

Notes:
*12-31-2018 -15% for size obs.

Washburn

Property Data

Neighborhood	**1 Neighborhood One**
Tree Growth Year	**0**
1ST MORTGAGE	**0**
2ND MORTGAGE	**0**
Zone/Land Use	**1 Residential**
Secondary Zone	
Topography	**1 Level**

1.Level	4.Below St	7.LevelBog
2.Rolling	5.Low	8.
3.Above St	6.Swampy	9.

Utilities

1.Public	4.Dr Well	7.Cesspool
2.Water	5.Dug Well	8.
3.Sewer	6.Septic	9.None

Street **1 Paved**

1.Paved	4.Proposed	7.
2.Semi Imp	5.R/O/W	8.
3.Gravel	6.	9.None

TG PLAN YEAR	**0**
Tif District #	**0**

Sale Data

Sale Date	**12/12/2012**
Price	**68,000**
Sale Type	**2 Land & Buildings**

1.Land	4.Mobile	7.C/I L&B
2.L & B	5.Other	8.
3.Building	6.C/I Land	9.

Financing **1 Conventional**

1.Convent	4.Seller	7.
2.FHA/VA	5.Private	8.
3.Assumed	6.Cash	9.Unknown

Validity **2 Related Parties**

1.Valid	4.Split	7.Renovate
2.Related	5.Partial	8.Other
3.Distress	6.Exempt	9.

Verified **5 Public Record**

1.Buyer	4.Agent	7.Family
2.Seller	5.Pub Rec	8.Other
3.Lender	6.MLS	9.

Assessment Record

Year	Land	Buildings	Exempt	Total
2007	24,000	21,000	0	45,000
2008	24,000	21,000	0	45,000
2009	24,000	21,000	0	45,000
2012	24,000	21,000	0	45,000
2013	31,200	21,000	0	52,200
2015	31,200	21,000	0	52,200
2018	31,200	21,000	0	52,200
2019	57,700	26,900	0	84,600
2020	57,700	26,900	0	84,600

Land Data

Front Foot	Type	Effective Frontage	Effective Depth	Influence Factor	Influence Code
11.Regular Lot				%	
12.Delta Triangle				%	
13.Nabla Triangle				%	
14.Rear Land				%	
15.Class I Road				%	
				%	
				%	
Square Foot		**Square Feet**			
16.Class II Road				%	
17.Municipal Rese				%	
18.Munic Sep Lago				%	
19.Gravel Pit				%	
20.Industrial Bas				%	
				%	
				%	
Fract. Acre		**Acreage/Sites**			
21.Developed Pave	22	1.00	100	%	0
22.Undev Paved (F	31	48.70	100	%	0
23.Developed Grav				%	
Acres				%	
24.Undev Gravel (				%	
25.Comm Base Pave				%	
26.Comm Base Grav				%	
27.Backlot				%	
28.Rear Land				%	
29.Pavement				%	

Total Acreage 49.70

Influence Codes

1.Unimproved
2.Excess Frtg
3.Topography
4.Size/Shape
5.Access
6.Restriction
7.Open Space
8.View/Environ
9.Fract Share
Acres
30.Utility R O W
31.Tillable
32.Pasture
33.Orchard
34.Softwood F&O
35.Mixed Wood F&O
36.Hardwood F&O
37.Softwood TG
38.Mixed Wood TG
39.Hardwood TG
40.Wasteland
41.Open Space
42.Mobile Home Si
43.Condo Site
44.Lot Improvemen
45.Subdivision Lo
46.Heavy Ind Sit

Washburn

Map Lot 006-015A | Account 153 | Location 240 CARIBOU LAKE ROAD | Card 1 Of 1 | 11/18/2020

Building Style **0**		
1.Conv.	5.Garrison	9.Gambrel
2.Ranch	6.Salt Box	10.Other
3.R Ranch	7.Contemp	11.Split
4.Cape	8.Log	12.
Dwelling Units **0**		
Other Units **0**		
Stories **0**		
1.1	4.1.5	7.
2.2	5.1.75	8.
3.3	6.2.5	9.
Exterior Walls **0**		
1.Wood	5.Stucco	9.T-111
2.Vin/Al	6.Brick	10.Other
3.Compos.	7.Stone	11.
4.Asbestos	8.Concrete	12.
Roof Surface **0**		
1.Asphalt	4.Composit	7.
2.Slate	5.Wood	8.
3.Metal	6.Other	9.
SF Masonry Trim **0**		
OPEN-3-CUSTOM **0**		
OPEN-4-CUSTOM **0**		
Year Built **0**		
Year Remodeled **0**		
Foundation **0**		
1.Concrete	4.Wood	7.
2.C Block	5.Slab	8.
3.Br/Stone	6.Piers	9.
Basement **0**		
1.1/4 Bmt	4.Full Bmt	7.
2.1/2 Bmt	5.None	8.
3.3/4 Bmt	6.	9.None
Bsmt Gar # Cars **0**		
Wet Basement **0**		
1.Dry	4.	7.
2.Damp	5.	8.
3.Wet	6.	9.

SF Bsmt Living **0**		
Fin Bsmt Grade **0 0**		
OPEN 5 OPTIONAL **0**		
Heat Type **100%** **0**		
1.HWBB	5.FWA	9.No Heat
2.HWCI	6.GravWA	10.
3.H Pump	7.Electric	11.
4.Steam	8.Fl/Wall	12.
Cool Type **0%**	**9 None**	
1.Refrig	4.W&C Air	7.
2.Evapor	5.	8.
3.H Pump	6.	9.None
Kitchen Style **0**		
1.Modern	4.Obsolete	7.
2.Typical	5.	8.
3.Old Type	6.	9.None
Bath(s) Style **0**		
1.Modern	4.Obsolete	7.
2.Typical	5.	8.
3.Old Type	6.	9.None
# Rooms **0**		
# Bedrooms **0**		
# Full Baths **0**		
# Half Baths **0**		
# Addn Fixtures **0**		
# Fireplaces **0**		

TRIO Software
A Division of Harris Computer Systems

Layout **0**		
1.Typical	4.	7.
2.Inadeq	5.	8.
3.Poor	6.	9.
Attic **0**		
1.1/4 Fin	4.Full Fin	7.
2.1/2 Fin	5.Fl/Stair	8.
3.3/4 Fin	6.	9.None
Insulation **0**		
1.Full	4.Minimal	7.
2.Heavy	5.Partial	8.
3.Capped	6.	9.None
Unfinished % **0%**		
Grade & Factor **0 0%**		
1.E Grade	4.B Grade	7.
2.D Grade	5.A Grade	8.SC Grade
3.C Grade	6.AA Grade	9.Same
SQFT (Footprint) **0**		
Condition **0**		
1.Poor	4.Avg	7.V G
2.Fair	5.Avg+	8.Exc
3.Avg-	6.Good	9.Same
Phys. % Good **0%**		
Funct. % Good **100%**		
Functional Code **9 None**		
1.Incomp	4.Delap	7.No Power
2.O-Built	5.Bsmt	8.LongTerm
3.Damage	6.Common	9.None
Econ. % Good **100%**		
Economic Code **None**		
0.None	3.No Power	7.
1.Location	4.Generate	8.
2.Encroach	9.None	9.
Entrance Code **5 Estimated**		
1.Interior	4.Vacant	7.
2.Refusal	5.Estimate	8.
3.Informed	6.Reviewed	9.
Information Code **5 Estimate**		
1.Owner	4.Agent	7.
2.Relative	5.Estimate	8.
3.Tenant	6.Other	9.

Date Inspected 9/24/2018

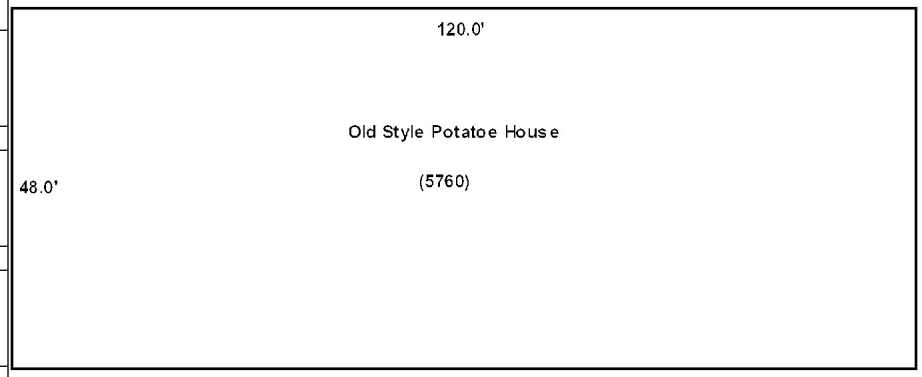

Additions, Outbuildings & Improvements

Type	Year	Units	Grade	Cond	Phys.	Funct.	Sound Value
91 Pot.Hse (Old)	1900	5760	2 110	4	0 %	50 %	
					%	%	
					%	%	
					%	%	
					%	%	
					%	%	
					%	%	
					%	%	
					%	%	
					%	%	

1.One Story Fram
2.Two Story Fram
3.Three Story Fr
4.1 & 1/2 Story
5.1 & 3/4 Story
6.2 & 1/2 Story
21.Open Frame Por
22.Encl Frame Por
23.Frame Garage
24.Frame Shed
25.Frame Bay Wind
26.1SFr Overhang
27.Unfin Basement
28.Unfinished Att
29.Finished Attic

Map Lot 006-015B | Account 998 | Location 282 CARIBOU LAKE ROAD | Card 1 Of 1 | 11/18/2020

MARSTON, NANCY
ROWE, RANDAL
282 CARIBOU LAKE ROAD

WASHBURN ME 04786
B4225P158 B4225P161

Property Data

Neighborhood	**1 Neighborhood One**
Tree Growth Year	**0**
1ST MORTGAGE	**0**
2ND MORTGAGE	**0**
Zone/Land Use	**1 Residential**
Secondary Zone	
Topography	**1 Level**

1.Level	4.Below St	7.LevelBog
2.Rolling	5.Low	8.
3.Above St	6.Swampy	9.

Utilities	**4 Drilled Well**	**6 Septic System**

1.Public	4.Dr Well	7.Cesspool
2.Water	5.Dug Well	8.
3.Sewer	6.Septic	9.None

Street	**1 Paved**

1.Paved	4.Proposed	7.
2.Semi Imp	5.R/O/W	8.
3.Gravel	6.	9.None

TG PLAN YEAR	**0**
Tif District #	**0**

Sale Data

Sale Date	**12/05/2005**
Price	
Sale Type	**2 Land & Buildings**

1.Land	4.Mobile	7.C/I L&B
2.L & B	5.Other	8.
3.Building	6.C/I Land	9.

Financing	**1 Conventional**

1.Convent	4.Seller	7.
2.FHA/VA	5.Private	8.
3.Assumed	6.Cash	9.Unknown

Validity	**1 Arms Length Sale**

1.Valid	4.Split	7.Renovate
2.Related	5.Partial	8.Other
3.Distress	6.Exempt	9.

Verified	**5 Public Record**

1.Buyer	4.Agent	7.Family
2.Seller	5.Pub Rec	8.Other
3.Lender	6.MLS	9.

Assessment Record

Year	Land	Buildings	Exempt	Total
2007	16,400	93,600	13,000	97,000
2008	16,400	93,600	13,000	97,000
2009	16,400	93,600	9,000	101,000
2012	16,400	73,000	8,800	80,600
2013	21,300	73,000	8,800	85,500
2015	21,300	73,000	9,000	85,300
2018	21,300	73,000	18,400	75,900
2019	38,600	75,700	20,000	94,300
2020	38,600	75,700	25,000	89,300

Land Data

Front Foot	Type	Effective Frontage	Effective Depth	Influence Factor	Influence Code
11.Regular Lot				%	
12.Delta Triangle				%	
13.Nabla Triangle				%	
14.Rear Land				%	
15.Class I Road				%	
				%	
				%	
Square Foot		**Square Feet**			
16.Class II Road	29	1,250		75 %	0
17.Municipal Rese				%	
18.Munic Sep Lago				%	
19.Gravel Pit				%	
20.Industrial Bas				%	
				%	
				%	
Fract. Acre		**Acreage/Sites**			
21.Developed Pave	21	1.00		100 %	0
22.Undev Paved (F	28	39.47		100 %	0
23.Developed Grav				%	
Acres				%	
24.Undev Gravel (				%	
25.Comm Base Pave				%	
26.Comm Base Grav				%	
27.Backlot				%	
28.Rear Land				%	
29.Pavement				%	

Total Acreage 40.47

Influence Codes

1.Unimproved
2.Excess Frtg
3.Topography
4.Size/Shape
5.Access
6.Restriction
7.Open Space
8.View/Environ
9.Fract Share
Acres
30.Utility R O W
31.Tillable
32.Pasture
33.Orchard
34.Softwood F&O
35.Mixed Wood F&O
36.Hardwood F&O
37.Softwood TG
38.Mixed Wood TG
39.Hardwood TG
40.Wasteland
41.Open Space
42.Mobile Home Si
43.Condo Site
44.Lot Improvemen
45.Subdivision Lo
46.Heavy Ind Sit

Inspection Witnessed By:

X Date

No./Date	Description	Date Insp.

Notes:

*2-21-2019 -15% for size obs. on 1 SF Barn, 2 SF Barn, and 1 SF Garage. All three barns were assessed at 50% delap. at time of reval.

Washburn

Washburn

Map Lot 006-015B | Account 998 | Location 282 CARIBOU LAKE ROAD | Card 1 Of 1 | 11/18/2020

Building Style	**4 Cape Cod**		
1.Conv.	5.Garrison	9.Gambrel	
2.Ranch	6.Salt Box	10.Other	
3.R Ranch	7.Contemp	11.Split	
4.Cape	8.Log	12.	
Dwelling Units	**1**		
Other Units	**0**		
Stories	**4 One & 1/2 Story**		
1.1	4.1.5	7.	
2.2	5.1.75	8.	
3.3	6.2.5	9.	
Exterior Walls	**1 Wood Siding**		
1.Wood	5.Stucco	9.T-111	
2.Vin/Al	6.Brick	10.Other	
3.Compos.	7.Stone	11.	
4.Asbestos	8.Concrete	12.	
Roof Surface	**1 Asphalt Shingles**		
1.Asphalt	4.Composit	7.	
2.Slate	5.Wood	8.	
3.Metal	6.Other	9.	
SF Masonry Trim	**0**		
OPEN-3-CUSTOM	**0**		
OPEN-4-CUSTOM	**0**		
Year Built	**1940**		
Year Remodeled	**0**		
Foundation	**1 Concrete**		
1.Concrete	4.Wood	7.	
2.C Block	5.Slab	8.	
3.Br/Stone	6.Piers	9.	
Basement	**4 Full Basement**		
1.1/4 Bmt	4.Full Bmt	7.	
2.1/2 Bmt	5.None	8.	
3.3/4 Bmt	6.	9.None	
Bsmt Gar # Cars	**0**		
Wet Basement	**3 Wet Basement**		
1.Dry	4.	7.	
2.Damp	5.	8.	
3.Wet	6.	9.	

SF Bsmt Living	**0**		
Fin Bsmt Grade	**0 0**		
OPEN 5 OPTIONAL	**0**		
Heat Type	**100%**	**1 Hot Water BB**	
1.HWBB	5.FWA	9.No Heat	
2.HWCI	6.GravWA	10.	
3.H Pump	7.Electric	11.	
4.Steam	8.Fl/Wall	12.	
Cool Type	**0%**	**9 None**	
1.Refrig	4.W&C Air	7.	
2.Evapor	5.	8.	
3.H Pump	6.	9.None	
Kitchen Style	**2 Typical**		
1.Modern	4.Obsolete	7.	
2.Typical	5.	8.	
3.Old Type	6.	9.None	
Bath(s) Style	**2 Typical Bath(s)**		
1.Modern	4.Obsolete	7.	
2.Typical	5.	8.	
3.Old Type	6.	9.None	
# Rooms	**7**		
# Bedrooms	**4**		
# Full Baths	**1**		
# Half Baths	**1**		
# Addn Fixtures	**0**		
# Fireplaces	**1**		

TRIO Software
A Division of Harris Computer Systems

Layout	**1 Typical**		
1.Typical	4.	7.	
2.Inadeq	5.	8.	
3.Poor	6.	9.	
Attic	**9 None**		
1.1/4 Fin	4.Full Fin	7.	
2.1/2 Fin	5.Fl/Stair	8.	
3.3/4 Fin	6.	9.None	
Insulation	**4 Minimal**		
1.Full	4.Minimal	7.	
2.Heavy	5.Partial	8.	
3.Capped	6.	9.None	
Unfinished %	**0%**		
Grade & Factor	**2 Fair 110%**		
1.E Grade	4.B Grade	7.	
2.D Grade	5.A Grade	8.SC Grade	
3.C Grade	6.AA Grade	9.Same	
SQFT (Footprint)	**1056**		
Condition	**4 Average**		
1.Poor	4.Avg	7.V G	
2.Fair	5.Avg+	8.Exc	
3.Avg-	6.Good	9.Same	
Phys. % Good	**0%**		
Funct. % Good	**90%**		
Functional Code	**4 Delapidation**		
1.Incomp	4.Delap	7.No Power	
2.O-Built	5.Bsmt	8.LongTerm	
3.Damage	6.Common	9.None	
Econ. % Good	**100%**		
Economic Code	**None**		
0.None	3.No Power	7.	
1.Location	4.Generate	8.	
2.Encroach	9.None	9.	
Entrance Code	**1 Interior Inspect**		
1.Interior	4.Vacant	7.	
2.Refusal	5.Estimate	8.	
3.Informed	6.Reviewed	9.	
Information Code	**1 Owner**		
1.Owner	4.Agent	7.	
2.Relative	5.Estimate	8.	
3.Tenant	6.Other	9.	

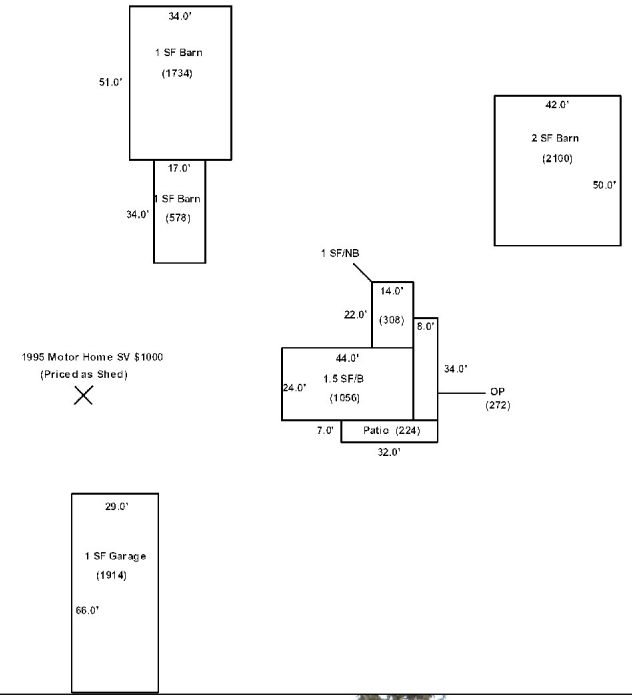

Date Inspected 9/25/2018

Additions, Outbuildings & Improvements

Type	Year	Units	Grade	Cond	Phys.	Funct.	Sound Value
62 Patio	1980	224	3 95	3	0 %	100 %	
21 Open Frame	1940	272	2 115	4	0 %	100 %	
1 One Story Frame	1940	308	2 110	4	0 %	100 %	
23 Frame Garage	1940	1914	3 90	3	0 %	85 %	
60 2 Story Barn	1940	2100	1 100	2	0 %	35 %	
59 Barn	1940	578	2 105	2	0 %	50 %	
59 Barn	1940	1734	2 105	2	0 %	35 %	
24 Frame Shed	0				%	%	1,000
					%	%	
					%	%	

1.One Story Fram
2.Two Story Fram
3.Three Story Fr
4.1 & 1/2 Story
5.1 & 3/4 Story
6.2 & 1/2 Story
21.Open Frame Por
22.Encl Frame Por
23.Frame Garage
24.Frame Shed
25.Frame Bay Wind
26.1SFr Overhang
27.Unfin Basement
28.Unfinished Att
29.Finished Attic

Map Lot 006-016 Account 160 Location 326 CARIBOU LAKE ROAD Card 1 Of 1 11/18/2020

BELL, ROBERT A.

P.O. BOX 475

WASHBURN ME 04786
B3118P151 B3726P81 B4036P104

Property Data

Neighborhood **1 Neighborhood One**

Tree Growth Year **0**

1ST MORTGAGE **0**

2ND MORTGAGE **0**

Zone/Land Use **1 Residential**

Secondary Zone

Topography **1 Level**

1.Level	4.Below St	7.LevelBog
2.Rolling	5.Low	8.
3.Above St	6.Swampy	9.

Utilities **4 Drilled Well** **6 Septic System**

1.Public	4.Dr Well	7.Cesspool
2.Water	5.Dug Well	8.
3.Sewer	6.Septic	9.None

Street **1 Paved**

1.Paved	4.Proposed	7.
2.Semi Imp	5.R/O/W	8.
3.Gravel	6.	9.None

TG PLAN YEAR **0**

Tif District # **0**

Sale Data

Sale Date **10/15/1976**

Price

Sale Type **2 Land & Buildings**

1.Land	4.Mobile	7.C/I L&B
2.L & B	5.Other	8.
3.Building	6.C/I Land	9.

Financing

1.Convent	4.Seller	7.
2.FHA/VA	5.Private	8.
3.Assumed	6.Cash	9.Unknown

Validity **2 Related Parties**

1.Valid	4.Split	7.Renovate
2.Related	5.Partial	8.Other
3.Distress	6.Exempt	9.

Verified **5 Public Record**

1.Buyer	4.Agent	7.Family
2.Seller	5.Pub Rec	8.Other
3.Lender	6.MLS	9.

Assessment Record

Year	Land	Buildings	Exempt	Total
2007	7,400	69,600	13,000	64,000
2008	7,400	69,600	13,000	64,000
2009	7,400	69,600	9,000	68,000
2012	7,400	79,100	14,080	72,420
2013	9,600	79,100	14,080	74,620
2015	9,600	79,100	14,400	74,300
2018	9,600	79,100	23,920	64,780
2019	20,200	81,800	26,000	76,000
2020	20,200	81,800	31,000	71,000

Land Data

Front Foot	Type	Effective Frontage	Effective Depth	Influence Factor	Influence Code
11.Regular Lot				%	
12.Delta Triangle				%	
13.Nabla Triangle				%	
14.Rear Land				%	
15.Class I Road				%	
				%	
				%	
Square Foot		**Square Feet**			
16.Class II Road	29	1,500		75 %	0
17.Municipal Rese				%	
18.Munic Sep Lago				%	
19.Gravel Pit				%	
20.Industrial Bas				%	
				%	
				%	
Fract. Acre		**Acreage/Sites**			
21.Developed Pave	21	1.00		100 %	0
22.Undev Paved (F	28	1.81		100 %	0
23.Developed Grav				%	
Acres				%	
24.Undev Gravel (				%	
25.Comm Base Pave				%	
26.Comm Base Grav				%	
27.Backlot				%	
28.Rear Land				%	
29.Pavement				%	

Total Acreage 2.81

Influence Codes

1.Unimproved
2.Excess Frtg
3.Topography
4.Size/Shape
5.Access
6.Restriction
7.Open Space
8.View/Environ
9.Fract Share

Acres

30.Utility R O W
31.Tillable
32.Pasture
33.Orchard
34.Softwood F&O
35.Mixed Wood F&O
36.Hardwood F&O
37.Softwood TG
38.Mixed Wood TG
39.Hardwood TG
40.Wasteland
41.Open Space
42.Mobile Home Si
43.Condo Site
44.Lot Improvemen
45.Subdivision Lo
46.Heavy Ind Sit

Inspection Witnessed By:

X Date

No./Date	Description	Date Insp.

Notes:

Washburn

Washburn

Map Lot 006-016 | Account 160 | Location 326 CARIBOU LAKE ROAD | Card 1 Of 1 | 11/18/2020

Building Style	**2 Ranch**		
1.Conv.	5.Garrison	9.Gambrel	
2.Ranch	6.Salt Box	10.Other	
3.R Ranch	7.Contemp	11.Split	
4.Cape	8.Log	12.	
Dwelling Units	**1**		
Other Units	**0**		
Stories	**1 One Story**		
1.1	4.1.5	7.	
2.2	5.1.75	8.	
3.3	6.2.5	9.	
Exterior Walls	**2 Vinyl/Aluminum**		
1.Wood	5.Stucco	9.T-111	
2.Vin/Al	6.Brick	10.Other	
3.Compos.	7.Stone	11.	
4.Asbestos	8.Concrete	12.	
Roof Surface	**1 Asphalt Shingles**		
1.Asphalt	4.Composit	7.	
2.Slate	5.Wood	8.	
3.Metal	6.Other	9.	
SF Masonry Trim	**0**		
OPEN-3-CUSTOM	**0**		
OPEN-4-CUSTOM	**0**		
Year Built	**1974**		
Year Remodeled	**0**		
Foundation	**1 Concrete**		
1.Concrete	4.Wood	7.	
2.C Block	5.Slab	8.	
3.Br/Stone	6.Piers	9.	
Basement	**4 Full Basement**		
1.1/4 Bmt	4.Full Bmt	7.	
2.1/2 Bmt	5.None	8.	
3.3/4 Bmt	6.	9.None	
Bsmt Gar # Cars	**0**		
Wet Basement	**2 Damp Basement**		
1.Dry	4.	7.	
2.Damp	5.	8.	
3.Wet	6.	9.	

SF Bsmt Living	**0**		
Fin Bsmt Grade	**0 0**		
OPEN 5 OPTIONAL	**0**		
Heat Type	**100%**	**1 Hot Water BB**	
1.HWBB	5.FWA	9.No Heat	
2.HWCI	6.GravWA	10.	
3.H Pump	7.Electric	11.	
4.Steam	8.Fl/Wall	12.	
Cool Type	**0%**	**9 None**	
1.Refrig	4.W&C Air	7.	
2.Evapor	5.	8.	
3.H Pump	6.	9.None	
Kitchen Style	**2 Typical**		
1.Modern	4.Obsolete	7.	
2.Typical	5.	8.	
3.Old Type	6.	9.None	
Bath(s) Style	**2 Typical Bath(s)**		
1.Modern	4.Obsolete	7.	
2.Typical	5.	8.	
3.Old Type	6.	9.None	
# Rooms	**5**		
# Bedrooms	**2**		
# Full Baths	**2**		
# Half Baths	**0**		
# Addn Fixtures	**0**		
# Fireplaces	**0**		

TRIO Software
A Division of Harris Computer Systems

Layout	**1 Typical**		
1.Typical	4.	7.	
2.Inadeq	5.	8.	
3.Poor	6.	9.	
Attic	**9 None**		
1.1/4 Fin	4.Full Fin	7.	
2.1/2 Fin	5.Fl/Stair	8.	
3.3/4 Fin	6.	9.None	
Insulation	**1 Full**		
1.Full	4.Minimal	7.	
2.Heavy	5.Partial	8.	
3.Capped	6.	9.None	
Unfinished %	**0%**		
Grade & Factor	**3 Average 115%**		
1.E Grade	4.B Grade	7.	
2.D Grade	5.A Grade	8.SC Grade	
3.C Grade	6.AA Grade	9.Same	
SQFT (Footprint)	**1208**		
Condition	**6 Good**		
1.Poor	4.Avg	7.V G	
2.Fair	5.Avg+	8.Exc	
3.Avg-	6.Good	9.Same	
Phys. % Good	**0%**		
Funct. % Good	**100%**		
Functional Code	**9 None**		
1.Incomp	4.Delap	7.No Power	
2.O-Built	5.Bsmt	8.LongTerm	
3.Damage	6.Common	9.None	
Econ. % Good	**100%**		
Economic Code	**None**		
0.None	3.No Power	7.	
1.Location	4.Generate	8.	
2.Encroach	9.None	9.	
Entrance Code	**1 Interior Inspect**		
1.Interior	4.Vacant	7.	
2.Refusal	5.Estimate	8.	
3.Informed	6.Reviewed	9.	
Information Code	**1 Owner**		
1.Owner	4.Agent	7.	
2.Relative	5.Estimate	8.	
3.Tenant	6.Other	9.	

Date Inspected 9/24/2018

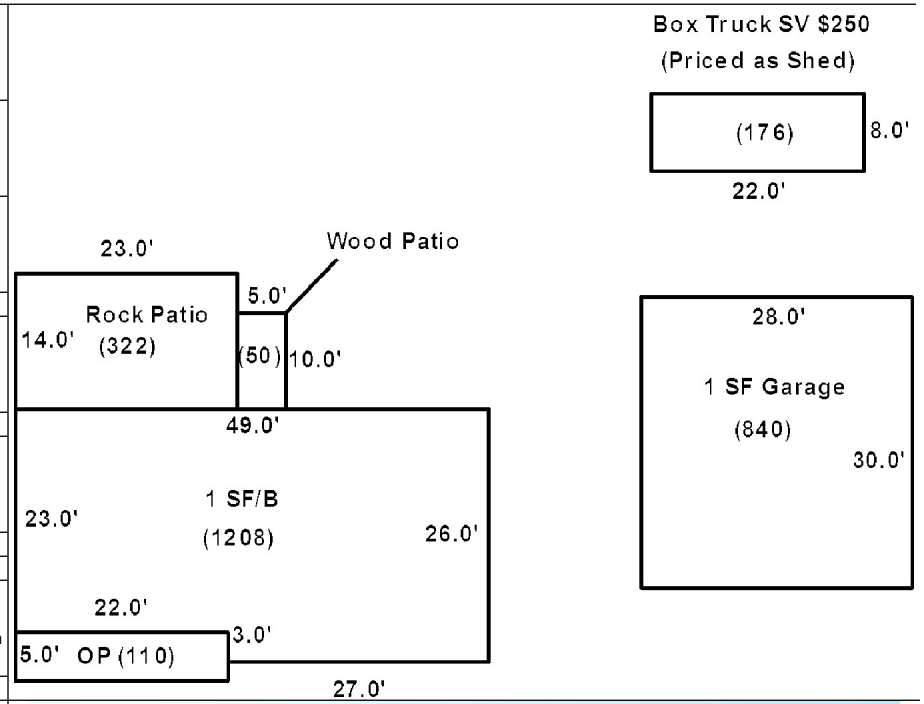

Additions, Outbuildings & Improvements

Type	Year	Units	Grade	Cond	Phys.	Funct.	Sound Value
21 Open Frame	1974	110	3 100	5	0 %	100 %	
62 Patio	1980	322	3 100	4	0 %	100 %	
62 Patio	2000	50	3 105	4	0 %	100 %	
24 Frame Shed	0				%	%	250
23 Frame Garage	1974	840	3 100	5	0 %	100 %	
					%	%	
					%	%	
					%	%	
					%	%	
					%	%	

1.One Story Fram
2.Two Story Fram
3.Three Story Fr
4.1 & 1/2 Story
5.1 & 3/4 Story
6.2 & 1/2 Story
21.Open Frame Por
22.Encl Frame Por
23.Frame Garage
24.Frame Shed
25.Frame Bay Wind
26.1SFr Overhang
27.Unfin Basement
28.Unfinished Att
29.Finished Attic

Map Lot 006-017 Account 555 Location 600 CARIBOU LAKE ROAD Card 1 Of 1 11/18/2020

MAYO, ARTHUR P.
MAYO, JUNE D.
600 CARIBOU LAKE ROAD

WASHBURN ME 04786
B4033P43 B5453P23

Property Data

Neighborhood **1 Neighborhood One**

Tree Growth Year **0**

1ST MORTGAGE **0**

2ND MORTGAGE **0**

Zone/Land Use **1 Residential**

Secondary Zone

Topography **1 Level**

1.Level	4.Below St	7.LevelBog
2.Rolling	5.Low	8.
3.Above St	6.Swampy	9.

Utilities **4 Drilled Well** **6 Septic System**

1.Public	4.Dr Well	7.Cesspool
2.Water	5.Dug Well	8.
3.Sewer	6.Septic	9.None

Street **1 Paved**

1.Paved	4.Proposed	7.
2.Semi Imp	5.R/O/W	8.
3.Gravel	6.	9.None

TG PLAN YEAR **0**

Tif District # **0**

Sale Data

Sale Date **5/23/2003**

Price **142,000**

Sale Type **2 Land & Buildings**

1.Land	4.Mobile	7.C/I L&B
2.L & B	5.Other	8.
3.Building	6.C/I Land	9.

Financing **1 Conventional**

1.Convent	4.Seller	7.
2.FHA/VA	5.Private	8.
3.Assumed	6.Cash	9.Unknown

Validity **1 Arms Length Sale**

1.Valid	4.Split	7.Renovate
2.Related	5.Partial	8.Other
3.Distress	6.Exempt	9.

Verified **1 Buyer**

1.Buyer	4.Agent	7.Family
2.Seller	5.Pub Rec	8.Other
3.Lender	6.MLS	9.

Assessment Record

Year	Land	Buildings	Exempt	Total
2007	23,100	53,100	13,000	63,200
2008	23,100	69,300	13,000	79,400
2009	23,100	90,500	9,000	104,600
2012	23,100	101,400	14,080	110,420
2013	30,000	101,400	14,080	117,320
2015	30,000	101,400	14,400	117,000
2018	30,000	119,300	23,920	125,380
2019	55,700	146,900	26,000	176,600
2020	55,700	145,600	31,000	170,300

Land Data

Front Foot	Type	Effective Frontage	Effective Depth	Influence Factor	Influence Code
11.Regular Lot				%	
12.Delta Triangle				%	
13.Nabla Triangle				%	
14.Rear Land				%	
15.Class I Road				%	
				%	
				%	
Square Foot		**Square Feet**			
16.Class II Road				%	
17.Municipal Rese				%	
18.Munic Sep Lago				%	
19.Gravel Pit				%	
20.Industrial Bas				%	
				%	
				%	
Fract. Acre		**Acreage/Sites**			
21.Developed Pave	21	1.00	100	%	0
22.Undev Paved (F	31	25.64	100	%	0
23.Developed Grav	28	27.16	100	%	0
Acres				%	
24.Undev Gravel (				%	
25.Comm Base Pave				%	
26.Comm Base Grav				%	
27.Backlot				%	
28.Rear Land				%	
29.Pavement				%	

Total Acreage 53.80

Influence Codes

1.Unimproved
2.Excess Frtg
3.Topography
4.Size/Shape
5.Access
6.Restriction
7.Open Space
8.View/Environ
9.Fract Share
Acres
30.Utility R O W
31.Tillable
32.Pasture
33.Orchard
34.Softwood F&O
35.Mixed Wood F&O
36.Hardwood F&O
37.Softwood TG
38.Mixed Wood TG
39.Hardwood TG
40.Wasteland
41.Open Space
42.Mobile Home Si
43.Condo Site
44.Lot Improvemen
45.Subdivision Lo
46.Heavy Ind Sit

Inspection Witnessed By:

X Date

No./Date	Description	Date Insp.

Notes:

*12-31-2018 Heat type is radiant throughout house, assessed as HWBB and adjusted in grade. -25% for size obs and delap on 2.75 SF Barn. -10 % on dwelling for overbuilt.
**Inadvertantly listed in Farmland Program and corrected after informational hearing with USDA soils map.

Washburn

Washburn

Map Lot 006-017 | Account 555 | Location 600 CARIBOU LAKE ROAD | Card 1 Of 1 | 11/18/2020

Building Style	**1 Conventional**		
1.Conv.	5.Garrison	9.Gambrel	
2.Ranch	6.Salt Box	10.Other	
3.R Ranch	7.Contemp	11.Split	
4.Cape	8.Log	12.	
Dwelling Units	**1**		
Other Units	**0**		
Stories	**2 Two Story**		
1.1	4.1.5	7.	
2.2	5.1.75	8.	
3.3	6.2.5	9.	
Exterior Walls	**2 Vinyl/Aluminum**		
1.Wood	5.Stucco	9.T-111	
2.Vin/Al	6.Brick	10.Other	
3.Compos.	7.Stone	11.	
4.Asbestos	8.Concrete	12.	
Roof Surface	**1 Asphalt Shingles**		
1.Asphalt	4.Composit	7.	
2.Slate	5.Wood	8.	
3.Metal	6.Other	9.	
SF Masonry Trim	**0**		
OPEN-3-CUSTOM	**0**		
OPEN-4-CUSTOM	**0**		
Year Built	**2005**		
Year Remodeled	**0**		
Foundation	**3 Brick &/or Stone**		
1.Concrete	4.Wood	7.	
2.C Block	5.Slab	8.	
3.Br/Stone	6.Piers	9.	
Basement	**4 Full Basement**		
1.1/4 Bmt	4.Full Bmt	7.	
2.1/2 Bmt	5.None	8.	
3.3/4 Bmt	6.	9.None	
Bsmt Gar # Cars	**0**		
Wet Basement	**2 Damp Basement**		
1.Dry	4.	7.	
2.Damp	5.	8.	
3.Wet	6.	9.	

SF Bsmt Living	**0**		
Fin Bsmt Grade	**0 0**		
OPEN 5 OPTIONAL	**0**		
Heat Type	**100%**	**1 Hot Water BB**	
1.HWBB	5.FWA	9.No Heat	
2.HWCI	6.GravWA	10.	
3.H Pump	7.Electric	11.	
4.Steam	8.Fl/Wall	12.	
Cool Type	**0%**	**9 None**	
1.Refrig	4.W&C Air	7.	
2.Evapor	5.	8.	
3.H Pump	6.	9.None	
Kitchen Style	**2 Typical**		
1.Modern	4.Obsolete	7.	
2.Typical	5.	8.	
3.Old Type	6.	9.None	
Bath(s) Style	**2 Typical Bath(s)**		
1.Modern	4.Obsolete	7.	
2.Typical	5.	8.	
3.Old Type	6.	9.None	
# Rooms	**6**		
# Bedrooms	**3**		
# Full Baths	**2**		
# Half Baths	**1**		
# Addn Fixtures	**0**		
# Fireplaces	**0**		

TRIO Software
A Division of Harris Computer Systems

Layout	**1 Typical**		
1.Typical	4.	7.	
2.Inadeq	5.	8.	
3.Poor	6.	9.	
Attic	**9 None**		
1.1/4 Fin	4.Full Fin	7.	
2.1/2 Fin	5.Fl/Stair	8.	
3.3/4 Fin	6.	9.None	
Insulation	**2 Heavy**		
1.Full	4.Minimal	7.	
2.Heavy	5.Partial	8.	
3.Capped	6.	9.None	
Unfinished %	**0%**		
Grade & Factor	**4 Good 95%**		
1.E Grade	4.B Grade	7.	
2.D Grade	5.A Grade	8.SC Grade	
3.C Grade	6.AA Grade	9.Same	
SQFT (Footprint)	**1470**		
Condition	**4 Average**		
1.Poor	4.Avg	7.V G	
2.Fair	5.Avg+	8.Exc	
3.Avg-	6.Good	9.Same	
Phys. % Good	**0%**		
Funct. % Good	**90%**		
Functional Code	**2 Overbuilt**		
1.Incomp	4.Delap	7.No Power	
2.O-Built	5.Bsmt	8.LongTerm	
3.Damage	6.Common	9.None	
Econ. % Good	**100%**		
Economic Code	**None**		
0.None	3.No Power	7.	
1.Location	4.Generate	8.	
2.Encroach	9.None	9.	
Entrance Code	**1 Interior Inspect**		
1.Interior	4.Vacant	7.	
2.Refusal	5.Estimate	8.	
3.Informed	6.Reviewed	9.	
Information Code	**1 Owner**		
1.Owner	4.Agent	7.	
2.Relative	5.Estimate	8.	
3.Tenant	6.Other	9.	

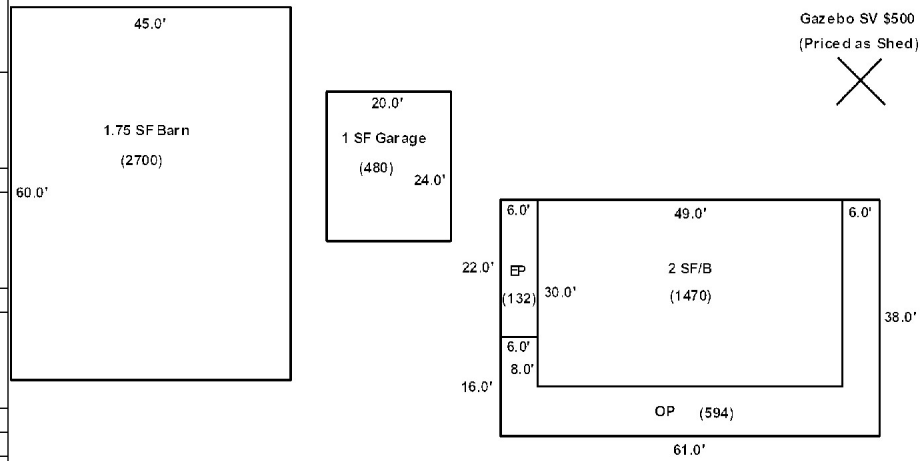

Date Inspected 9/24/2018

Additions, Outbuildings & Improvements

Type	Year	Units	Grade	Cond	Phys.	Funct.	Sound Value
21 Open Frame	2005	594	3 105	4	0 %	100 %	
22 Encl Frame Porch	2005	132	3 110	4	0 %	100 %	
23 Frame Garage	1920	480	3 90	3	0 %	100 %	
116 1.75 Story Barn	1900	2700	2 110	3	0 %	75 %	
24 Frame Shed	0				%	%	500
					%	%	
					%	%	
					%	%	
					%	%	
					%	%	

1.One Story Fram
2.Two Story Fram
3.Three Story Fr
4.1 & 1/2 Story
5.1 & 3/4 Story
6.2 & 1/2 Story
21.Open Frame Por
22.Encl Frame Por
23.Frame Garage
24.Frame Shed
25.Frame Bay Wind
26.1SFr Overhang
27.Unfin Basement
28.Unfinished Att
29.Finished Attic

Map Lot 006-017A | Account 581 | Location 462 CARIBOU LAKE ROAD | Card 1 Of 1 | 11/18/2020

FARRAR, PRISCILLA V.

462 CARIBOU LAKE ROAD

WASHBURN ME 04786
B5406P277 B5406P278

Previous Owner
THIBODEAU, KYLIE R.
462 CARIBOU LAKE ROAD

WASHBURN ME 04786
Sale Date: 3/19/2015

Previous Owner
Kelley, Michael H.
462 Caribou Lake Road

Washburn ME 04786
Sale Date: 2/15/2012

Inspection Witnessed By:

X Date

No./Date	Description	Date Insp.

Notes:
*2-21-2019 -20% for attached garage.

Washburn

Property Data

Neighborhood	**1 Neighborhood One**
Tree Growth Year	**0**
1ST MORTGAGE	**0**
2ND MORTGAGE	**0**
Zone/Land Use	**1 Residential**
Secondary Zone	
Topography	**1 Level**

1.Level	4.Below St	7.LevelBog
2.Rolling	5.Low	8.
3.Above St	6.Swampy	9.

Utilities	**4 Drilled Well**	**6 Septic System**

1.Public	4.Dr Well	7.Cesspool
2.Water	5.Dug Well	8.
3.Sewer	6.Septic	9.None

Street	**1 Paved**

1.Paved	4.Proposed	7.
2.Semi Imp	5.R/O/W	8.
3.Gravel	6.	9.None

TG PLAN YEAR	**0**
Tif District #	**0**

Sale Data

Sale Date	**3/19/2015**
Price	**142,000**
Sale Type	**2 Land & Buildings**

1.Land	4.Mobile	7.C/I L&B
2.L & B	5.Other	8.
3.Building	6.C/I Land	9.

Financing	**1 Conventional**

1.Convent	4.Seller	7.
2.FHA/VA	5.Private	8.
3.Assumed	6.Cash	9.Unknown

Validity	**1 Arms Length Sale**

1.Valid	4.Split	7.Renovate
2.Related	5.Partial	8.Other
3.Distress	6.Exempt	9.

Verified	**5 Public Record**

1.Buyer	4.Agent	7.Family
2.Seller	5.Pub Rec	8.Other
3.Lender	6.MLS	9.

Assessment Record

Year	Land	Buildings	Exempt	Total
2007	6,500	77,300	13,000	70,800
2008	6,500	77,300	13,000	70,800
2009	6,500	77,300	9,000	74,800
2012	6,500	77,300	0	83,800
2013	8,500	77,300	0	85,800
2015	8,500	77,300	0	85,800
2018	8,500	77,300	18,400	67,400
2019	16,500	83,000	20,000	79,500
2020	16,500	82,200	25,000	73,700

Land Data

Front Foot	Type	Effective Frontage	Effective Depth	Influence Factor	Influence Code
11.Regular Lot				%	
12.Delta Triangle				%	
13.Nabla Triangle				%	
14.Rear Land				%	
15.Class I Road				%	
				%	
				%	
Square Foot		**Square Feet**			
16.Class II Road				%	
17.Municipal Rese				%	
18.Munic Sep Lago				%	
19.Gravel Pit				%	
20.Industrial Bas				%	
				%	
				%	
Fract. Acre		**Acreage/Sites**			
21.Developed Pave	21		1.00	100 %	0
22.Undev Paved (F				%	
23.Developed Grav				%	
Acres				%	
24.Undev Gravel (				%	
25.Comm Base Pave				%	
26.Comm Base Grav				%	
27.Backlot				%	
28.Rear Land				%	
29.Pavement				%	

Total Acreage 1.00

Influence Codes

1.Unimproved
2.Excess Frtg
3.Topography
4.Size/Shape
5.Access
6.Restriction
7.Open Space
8.View/Environ
9.Fract Share
Acres
30.Utility R O W
31.Tillable
32.Pasture
33.Orchard
34.Softwood F&O
35.Mixed Wood F&O
36.Hardwood F&O
37.Softwood TG
38.Mixed Wood TG
39.Hardwood TG
40.Wasteland
41.Open Space
42.Mobile Home Si
43.Condo Site
44.Lot Improvemen
45.Subdivision Lo
46.Heavy Ind Sit

Washburn

Map Lot 006-017A | Account 581 | Location 462 CARIBOU LAKE ROAD | Card 1 Of 1 | 11/18/2020

Building Style	**2 Ranch**		
1.Conv.	5.Garrison	9.Gambrel	
2.Ranch	6.Salt Box	10.Other	
3.R Ranch	7.Contemp	11.Split	
4.Cape	8.Log	12.	
Dwelling Units	**1**		
Other Units	**0**		
Stories	**1 One Story**		
1.1	4.1.5	7.	
2.2	5.1.75	8.	
3.3	6.2.5	9.	
Exterior Walls	**2 Vinyl/Aluminum**		
1.Wood	5.Stucco	9.T-111	
2.Vin/Al	6.Brick	10.Other	
3.Compos.	7.Stone	11.	
4.Asbestos	8.Concrete	12.	
Roof Surface	**3 Sheet Metal**		
1.Asphalt	4.Composit	7.	
2.Slate	5.Wood	8.	
3.Metal	6.Other	9.	
SF Masonry Trim	**0**		
OPEN-3-CUSTOM	**0**		
OPEN-4-CUSTOM	**0**		
Year Built	**1985**		
Year Remodeled	**0**		
Foundation	**1 Concrete**		
1.Concrete	4.Wood	7.	
2.C Block	5.Slab	8.	
3.Br/Stone	6.Piers	9.	
Basement	**4 Full Basement**		
1.1/4 Bmt	4.Full Bmt	7.	
2.1/2 Bmt	5.None	8.	
3.3/4 Bmt	6.	9.None	
Bsmt Gar # Cars	**0**		
Wet Basement	**2 Damp Basement**		
1.Dry	4.	7.	
2.Damp	5.	8.	
3.Wet	6.	9.	

SF Bsmt Living	**0**		
Fin Bsmt Grade	**0 0**		
OPEN 5 OPTIONAL	**0**		
Heat Type	**100%**	**1 Hot Water BB**	
1.HWBB	5.FWA	9.No Heat	
2.HWCI	6.GravWA	10.	
3.H Pump	7.Electric	11.	
4.Steam	8.Fl/Wall	12.	
Cool Type	**0%**	**9 None**	
1.Refrig	4.W&C Air	7.	
2.Evapor	5.	8.	
3.H Pump	6.	9.None	
Kitchen Style	**2 Typical**		
1.Modern	4.Obsolete	7.	
2.Typical	5.	8.	
3.Old Type	6.	9.None	
Bath(s) Style	**2 Typical Bath(s)**		
1.Modern	4.Obsolete	7.	
2.Typical	5.	8.	
3.Old Type	6.	9.None	
# Rooms	**5**		
# Bedrooms	**2**		
# Full Baths	**1**		
# Half Baths	**0**		
# Addn Fixtures	**0**		
# Fireplaces	**0**		

TRIO Software
A Division of Harris Computer Systems

Layout	**1 Typical**		
1.Typical	4.	7.	
2.Inadeq	5.	8.	
3.Poor	6.	9.	
Attic	**9 None**		
1.1/4 Fin	4.Full Fin	7.	
2.1/2 Fin	5.Fl/Stair	8.	
3.3/4 Fin	6.	9.None	
Insulation	**1 Full**		
1.Full	4.Minimal	7.	
2.Heavy	5.Partial	8.	
3.Capped	6.	9.None	
Unfinished %	**0%**		
Grade & Factor	**4 Good 100%**		
1.E Grade	4.B Grade	7.	
2.D Grade	5.A Grade	8.SC Grade	
3.C Grade	6.AA Grade	9.Same	
SQFT (Footprint)	**1250**		
Condition	**6 Good**		
1.Poor	4.Avg	7.V G	
2.Fair	5.Avg+	8.Exc	
3.Avg-	6.Good	9.Same	
Phys. % Good	**0%**		
Funct. % Good	**100%**		
Functional Code	**9 None**		
1.Incomp	4.Delap	7.No Power	
2.O-Built	5.Bsmt	8.LongTerm	
3.Damage	6.Common	9.None	
Econ. % Good	**100%**		
Economic Code	**None**		
0.None	3.No Power	7.	
1.Location	4.Generate	8.	
2.Encroach	9.None	9.	
Entrance Code	**1 Interior Inspect**		
1.Interior	4.Vacant	7.	
2.Refusal	5.Estimate	8.	
3.Informed	6.Reviewed	9.	
Information Code	**1 Owner**		
1.Owner	4.Agent	7.	
2.Relative	5.Estimate	8.	
3.Tenant	6.Other	9.	

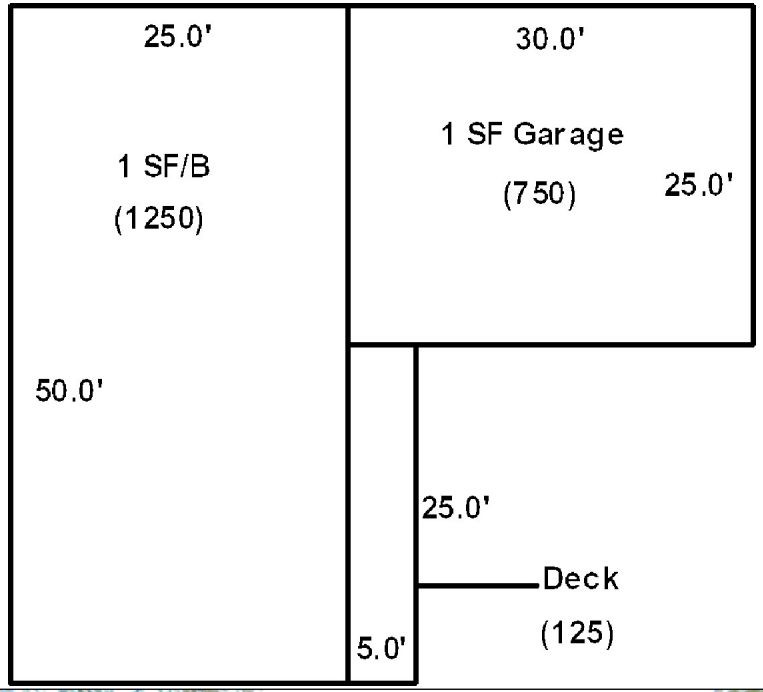

Date Inspected 9/24/2018

Additions, Outbuildings & Improvements

Type	Year	Units	Grade	Cond	Phys.	Funct.	Sound Value
68 Wood Deck	1985	125	3 100	5	0 %	100 %	
23 Frame Garage	1985	750	4 100	5	0 %	80 %	
					%	%	
					%	%	
					%	%	
					%	%	
					%	%	
					%	%	
					%	%	
					%	%	

1.One Story Fram
2.Two Story Fram
3.Three Story Fr
4.1 & 1/2 Story
5.1 & 3/4 Story
6.2 & 1/2 Story
21.Open Frame Por
22.Encl Frame Por
23.Frame Garage
24.Frame Shed
25.Frame Bay Wind
26.1SFr Overhang
27.Unfin Basement
28.Unfinished Att
29.Finished Attic

Map Lot 006-018 | Account 556 | Location Caribou Lake Road | Card 1 Of 1 | 11/18/2020

Mayo, Arthur P.
Mayo, June D.
600 Caribou Lake Road

Washburn ME 04786
B4033P43

Property Data

Neighborhood **1 Neighborhood One**

Tree Growth Year **0**

1ST MORTGAGE **0**

2ND MORTGAGE **0**

Zone/Land Use **1 Residential**

Secondary Zone

Topography **1 Level**

1.Level	4.Below St	7.LevelBog
2.Rolling	5.Low	8.
3.Above St	6.Swampy	9.

Utilities

1.Public	4.Dr Well	7.Cesspool
2.Water	5.Dug Well	8.
3.Sewer	6.Septic	9.None

Street **1 Paved**

1.Paved	4.Proposed	7.
2.Semi Imp	5.R/O/W	8.
3.Gravel	6.	9.None

TG PLAN YEAR **0**

Tif District # **0**

Sale Data

Sale Date

Price

Sale Type

1.Land	4.Mobile	7.C/I L&B
2.L & B	5.Other	8.
3.Building	6.C/I Land	9.

Financing

1.Convent	4.Seller	7.
2.FHA/VA	5.Private	8.
3.Assumed	6.Cash	9.Unknown

Validity

1.Valid	4.Split	7.Renovate
2.Related	5.Partial	8.Other
3.Distress	6.Exempt	9.

Verified

1.Buyer	4.Agent	7.Family
2.Seller	5.Pub Rec	8.Other
3.Lender	6.MLS	9.

Assessment Record

Year	Land	Buildings	Exempt	Total
2007	17,700	0	0	17,700
2008	17,700	0	0	17,700
2009	17,700	0	0	17,700
2012	17,700	0	0	17,700
2013	22,900	0	0	22,900
2015	22,900	0	0	22,900
2018	22,900	0	0	22,900
2019	50,600	0	0	50,600
2020	50,600	0	0	50,600

Land Data

Front Foot	Type	Effective Frontage	Effective Depth	Influence Factor	Influence Code
11.Regular Lot				%	
12.Delta Triangle				%	
13.Nabla Triangle				%	
14.Rear Land				%	
15.Class I Road				%	
				%	
				%	
Square Foot		**Square Feet**			
16.Class II Road				%	
17.Municipal Rese				%	
18.Munic Sep Lago				%	
19.Gravel Pit				%	
20.Industrial Bas				%	
				%	
				%	
Fract. Acre		**Acreage/Sites**			
21.Developed Pave	31	32.37	100	%	0
22.Undev Paved (F	28	18.36	100	%	0
23.Developed Grav	22	1.00	100	%	0
Acres				%	
24.Undev Gravel (				%	
25.Comm Base Pave				%	
26.Comm Base Grav				%	
27.Backlot				%	
28.Rear Land					
29.Pavement					

Total Acreage 51.73

Influence Codes

1.Unimproved
2.Excess Frtg
3.Topography
4.Size/Shape
5.Access
6.Restriction
7.Open Space
8.View/Environ
9.Fract Share
Acres
30.Utility R O W
31.Tillable
32.Pasture
33.Orchard
34.Softwood F&O
35.Mixed Wood F&O
36.Hardwood F&O
37.Softwood TG
38.Mixed Wood TG
39.Hardwood TG
40.Wasteland
41.Open Space
42.Mobile Home Si
43.Condo Site
44.Lot Improvemen
45.Subdivision Lo
46.Heavy Ind Sit

Inspection Witnessed By:

X Date

No./Date	Description	Date Insp.

Notes:
*Corrected per USDA soils map

Washburn

Washburn

Map Lot 006-018 | Account 556 | Location Caribou Lake Road | Card 1 Of 1 | 11/18/2020

Building Style **0**		
1.Conv.	5.Garrison	9.Gambrel
2.Ranch	6.Salt Box	10.Other
3.R Ranch	7.Contemp	11.Split
4.Cape	8.Log	12.
Dwelling Units **0**		
Other Units **0**		
Stories **0**		
1.1	4.1.5	7.
2.2	5.1.75	8.
3.3	6.2.5	9.
Exterior Walls **0**		
1.Wood	5.Stucco	9.T-111
2.Vin/Al	6.Brick	10.Other
3.Compos.	7.Stone	11.
4.Asbestos	8.Concrete	12.
Roof Surface **0**		
1.Asphalt	4.Composit	7.
2.Slate	5.Wood	8.
3.Metal	6.Other	9.
SF Masonry Trim **0**		
OPEN-3-CUSTOM **0**		
OPEN-4-CUSTOM **0**		
Year Built **0**		
Year Remodeled **0**		
Foundation **0**		
1.Concrete	4.Wood	7.
2.C Block	5.Slab	8.
3.Br/Stone	6.Piers	9.
Basement **0**		
1.1/4 Bmt	4.Full Bmt	7.
2.1/2 Bmt	5.None	8.
3.3/4 Bmt	6.	9.None
Bsmt Gar # Cars **0**		
Wet Basement **0**		
1.Dry	4.	7.
2.Damp	5.	8.
3.Wet	6.	9.

SF Bsmt Living **0**		
Fin Bsmt Grade **0 0**		
OPEN 5 OPTIONAL **0**		
Heat Type **100%** **0**		
1.HWBB	5.FWA	9.No Heat
2.HWCI	6.GravWA	10.
3.H Pump	7.Electric	11.
4.Steam	8.Fl/Wall	12.
Cool Type **0%** **9 None**		
1.Refrig	4.W&C Air	7.
2.Evapor	5.	8.
3.H Pump	6.	9.None
Kitchen Style **0**		
1.Modern	4.Obsolete	7.
2.Typical	5.	8.
3.Old Type	6.	9.None
Bath(s) Style **0**		
1.Modern	4.Obsolete	7.
2.Typical	5.	8.
3.Old Type	6.	9.None
# Rooms **0**		
# Bedrooms **0**		
# Full Baths **0**		
# Half Baths **0**		
# Addn Fixtures **0**		
# Fireplaces **0**		

TRIO Software
A Division of Harris Computer Systems

Layout **0**		
1.Typical	4.	7.
2.Inadeq	5.	8.
3.Poor	6.	9.
Attic **0**		
1.1/4 Fin	4.Full Fin	7.
2.1/2 Fin	5.Fl/Stair	8.
3.3/4 Fin	6.	9.None
Insulation **0**		
1.Full	4.Minimal	7.
2.Heavy	5.Partial	8.
3.Capped	6.	9.None
Unfinished % **0%**		
Grade & Factor **0 0%**		
1.E Grade	4.B Grade	7.
2.D Grade	5.A Grade	8.SC Grade
3.C Grade	6.AA Grade	9.Same
SQFT (Footprint) **0**		
Condition **0**		
1.Poor	4.Avg	7.V G
2.Fair	5.Avg+	8.Exc
3.Avg-	6.Good	9.Same
Phys. % Good **0%**		
Funct. % Good **100%**		
Functional Code **9 None**		
1.Incomp	4.Delap	7.No Power
2.O-Built	5.Bsmt	8.LongTerm
3.Damage	6.Common	9.None
Econ. % Good **100%**		
Economic Code **None**		
0.None	3.No Power	7.
1.Location	4.Generate	8.
2.Encroach	9.None	9.
Entrance Code **0**		
1.Interior	4.Vacant	7.
2.Refusal	5.Estimate	8.
3.Informed	6.Reviewed	9.
Information Code **0**		
1.Owner	4.Agent	7.
2.Relative	5.Estimate	8.
3.Tenant	6.Other	9.

Date Inspected

Additions, Outbuildings & Improvements

Type	Year	Units	Grade	Cond	Phys.	Funct.	Sound Value
					%	%	
					%	%	
					%	%	
					%	%	
					%	%	
					%	%	
					%	%	
					%	%	
					%	%	
					%	%	

1.One Story Fram
2.Two Story Fram
3.Three Story Fr
4.1 & 1/2 Story
5.1 & 3/4 Story
6.2 & 1/2 Story
21.Open Frame Por
22.Encl Frame Por
23.Frame Garage
24.Frame Shed
25.Frame Bay Wind
26.1SFr Overhang
27.Unfin Basement
28.Unfinished Att
29.Finished Attic

Map Lot 006-019 Account 902 Location 513 CARIBOU LAKE ROAD Card 1 Of 1 11/18/2020

THIBODEAU, KEVIN

513 CARIBOU LAKE ROAD

WASHBURN ME 04786
B5129P156 B5595P223 B5595P241

Property Data

Neighborhood **1 Neighborhood One**

Tree Growth Year **0**

1ST MORTGAGE **0**

2ND MORTGAGE **0**

Zone/Land Use **1 Residential**

Secondary Zone

Topography **3 Above Street**

1.Level	4.Below St	7.LevelBog
2.Rolling	5.Low	8.
3.Above St	6.Swampy	9.

Utilities **4 Drilled Well** **6 Septic System**

1.Public	4.Dr Well	7.Cesspool
2.Water	5.Dug Well	8.
3.Sewer	6.Septic	9.None

Street **1 Paved**

1.Paved	4.Proposed	7.
2.Semi Imp	5.R/O/W	8.
3.Gravel	6.	9.None

TG PLAN YEAR **0**

Tif District # **0**

Sale Data

Sale Date **2/15/1999**

Price

Sale Type **2 Land & Buildings**

1.Land	4.Mobile	7.C/I L&B
2.L & B	5.Other	8.
3.Building	6.C/I Land	9.

Financing **1 Conventional**

1.Convent	4.Seller	7.
2.FHA/VA	5.Private	8.
3.Assumed	6.Cash	9.Unknown

Validity **2 Related Parties**

1.Valid	4.Split	7.Renovate
2.Related	5.Partial	8.Other
3.Distress	6.Exempt	9.

Verified **5 Public Record**

1.Buyer	4.Agent	7.Family
2.Seller	5.Pub Rec	8.Other
3.Lender	6.MLS	9.

Assessment Record

Year	Land	Buildings	Exempt	Total
2007	30,500	7,400	37,900	0
2008	30,500	7,400	37,900	0
2009	30,500	20,700	9,000	42,200
2012	30,500	20,700	8,800	42,400
2013	39,700	20,700	8,800	51,600
2015	39,700	20,700	9,000	51,400
2018	39,700	20,700	18,400	42,000
2019	64,500	17,300	20,000	61,800
2020	64,500	17,300	25,000	56,800

Land Data

Front Foot	Type	Effective Frontage	Effective Depth	Influence Factor	Influence Code
11.Regular Lot				%	
12.Delta Triangle				%	
13.Nabla Triangle				%	
14.Rear Land				%	
15.Class I Road				%	
				%	
				%	
Square Foot		**Square Feet**			
16.Class II Road				%	
17.Municipal Rese				%	
18.Munic Sep Lago				%	
19.Gravel Pit				%	
20.Industrial Bas				%	
				%	
				%	
Fract. Acre		**Acreage/Sites**			
21.Developed Pave	21	1.00	100	%	0
22.Undev Paved (F	28	96.00	100	%	0
23.Developed Grav				%	
Acres				%	
24.Undev Gravel (				%	
25.Comm Base Pave				%	
26.Comm Base Grav				%	
27.Backlot				%	
28.Rear Land				%	
29.Pavement				%	

Total Acreage 97.00

Influence Codes

1.Unimproved
2.Excess Frtg
3.Topography
4.Size/Shape
5.Access
6.Restriction
7.Open Space
8.View/Environ
9.Fract Share
Acres
30.Utility R O W
31.Tillable
32.Pasture
33.Orchard
34.Softwood F&O
35.Mixed Wood F&O
36.Hardwood F&O
37.Softwood TG
38.Mixed Wood TG
39.Hardwood TG
40.Wasteland
41.Open Space
42.Mobile Home Si
43.Condo Site
44.Lot Improvemen
45.Subdivision Lo
46.Heavy Ind Sit

Inspection Witnessed By:

X Date

No./Date	Description	Date Insp.

Notes:

Washburn

Washburn

Map Lot 006-019 | Account 902 | Location 513 CARIBOU LAKE ROAD | Card 1 Of 1 | 11/18/2020

Building Style **0**		
1.Conv.	5.Garrison	9.Gambrel
2.Ranch	6.Salt Box	10.Other
3.R Ranch	7.Contemp	11.Split
4.Cape	8.Log	12.
Dwelling Units **0**		
Other Units **0**		
Stories **0**		
1.1	4.1.5	7.
2.2	5.1.75	8.
3.3	6.2.5	9.
Exterior Walls **0**		
1.Wood	5.Stucco	9.T-111
2.Vin/Al	6.Brick	10.Other
3.Compos.	7.Stone	11.
4.Asbestos	8.Concrete	12.
Roof Surface **0**		
1.Asphalt	4.Composit	7.
2.Slate	5.Wood	8.
3.Metal	6.Other	9.
SF Masonry Trim **0**		
OPEN-3-CUSTOM **0**		
OPEN-4-CUSTOM **0**		
Year Built **0**		
Year Remodeled **0**		
Foundation **0**		
1.Concrete	4.Wood	7.
2.C Block	5.Slab	8.
3.Br/Stone	6.Piers	9.
Basement **0**		
1.1/4 Bmt	4.Full Bmt	7.
2.1/2 Bmt	5.None	8.
3.3/4 Bmt	6.	9.None
Bsmt Gar # Cars **0**		
Wet Basement **0**		
1.Dry	4.	7.
2.Damp	5.	8.
3.Wet	6.	9.

SF Bsmt Living **0**		
Fin Bsmt Grade **0 0**		
OPEN 5 OPTIONAL **0**		
Heat Type **100%** **0**		
1.HWBB	5.FWA	9.No Heat
2.HWCI	6.GravWA	10.
3.H Pump	7.Electric	11.
4.Steam	8.Fl/Wall	12.
Cool Type **0%** **9 None**		
1.Refrig	4.W&C Air	7.
2.Evapor	5.	8.
3.H Pump	6.	9.None
Kitchen Style **0**		
1.Modern	4.Obsolete	7.
2.Typical	5.	8.
3.Old Type	6.	9.None
Bath(s) Style **0**		
1.Modern	4.Obsolete	7.
2.Typical	5.	8.
3.Old Type	6.	9.None
# Rooms **0**		
# Bedrooms **0**		
# Full Baths **0**		
# Half Baths **0**		
# Addn Fixtures **0**		
# Fireplaces **0**		

TRIO Software
A Division of Harris Computer Systems

Layout **0**		
1.Typical	4.	7.
2.Inadeq	5.	8.
3.Poor	6.	9.
Attic **0**		
1.1/4 Fin	4.Full Fin	7.
2.1/2 Fin	5.Fl/Stair	8.
3.3/4 Fin	6.	9.None
Insulation **0**		
1.Full	4.Minimal	7.
2.Heavy	5.Partial	8.
3.Capped	6.	9.None
Unfinished % **0%**		
Grade & Factor **0 0%**		
1.E Grade	4.B Grade	7.
2.D Grade	5.A Grade	8.SC Grade
3.C Grade	6.AA Grade	9.Same
SQFT (Footprint) **0**		
Condition **0**		
1.Poor	4.Avg	7.V G
2.Fair	5.Avg+	8.Exc
3.Avg-	6.Good	9.Same
Phys. % Good **0%**		
Funct. % Good **100%**		
Functional Code **9 None**		
1.Incomp	4.Delap	7.No Power
2.O-Built	5.Bsmt	8.LongTerm
3.Damage	6.Common	9.None
Econ. % Good **100%**		
Economic Code **None**		
0.None	3.No Power	7.
1.Location	4.Generate	8.
2.Encroach	9.None	9.
Entrance Code **3 Information Only**		
1.Interior	4.Vacant	7.
2.Refusal	5.Estimate	8.
3.Informed	6.Reviewed	9.
Information Code **1 Owner**		
1.Owner	4.Agent	7.
2.Relative	5.Estimate	8.
3.Tenant	6.Other	9.

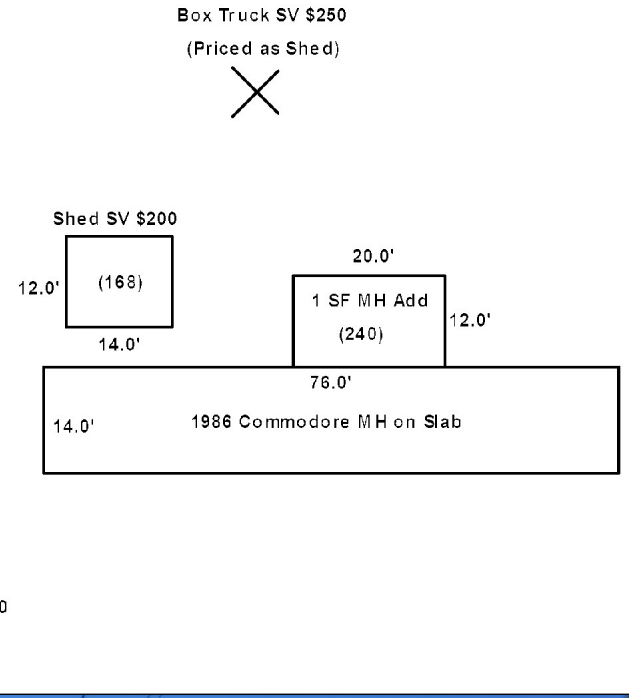

Date Inspected 9/24/2018

Additions, Outbuildings & Improvements

Type	Year	Units	Grade	Cond	Phys.	Funct.	Sound Value
756 Commodore	1986	14x76	5 100	5	0 %	100 %	
48 Concrete Slab	1986	1064	3 100	4	0 %	100 %	
18 1 S-MH add	1990	240	3 100	4	0 %	100 %	
24 Frame Shed	0				%	%	100
24 Frame Shed	0				%	%	200
24 Frame Shed	0				%	%	250
					%	%	
					%	%	
					%	%	
					%	%	

1.One Story Fram
2.Two Story Fram
3.Three Story Fr
4.1 & 1/2 Story
5.1 & 3/4 Story
6.2 & 1/2 Story
21.Open Frame Por
22.Encl Frame Por
23.Frame Garage
24.Frame Shed
25.Frame Bay Wind
26.1SFr Overhang
27.Unfin Basement
28.Unfinished Att
29.Finished Attic

Map Lot 006-020 Account 901 Location COFFIN ROAD Card 1 Of 1 11/18/2020

Sander, Dona

206 Gauthier Memorial Way

Port St. Joe FL 32456
B5129P154 B5649P148

Previous Owner
SANDER, DONA
206 GAUTIER MEMORIAL WAY

PORT ST. JOE FL 32456
Sale Date: 4/01/2017

Previous Owner
Thibodeau, Kevin
513 Caribou Lake Road

Washburn ME 04786
Sale Date: 3/21/2017

Previous Owner
Thibodeau, Doris
576 Washburn Road

Woodland ME 04736
Sale Date: 8/30/2010

Inspection Witnessed By:

X Date

No./Date	Description	Date Insp.

Notes:

Washburn

Property Data

Neighborhood	**1 Neighborhood One**	
Tree Growth Year	**0**	
1ST MORTGAGE		**0**
2ND MORTGAGE		**0**
Zone/Land Use	**1 Residential**	
Secondary Zone		
Topography	**2 Rolling**	
1.Level	4.Below St	7.LevelBog
2.Rolling	5.Low	8.
3.Above St	6.Swampy	9.
Utilities		
1.Public	4.Dr Well	7.Cesspool
2.Water	5.Dug Well	8.
3.Sewer	6.Septic	9.None
Street	**1 Paved**	
1.Paved	4.Proposed	7.
2.Semi Imp	5.R/O/W	8.
3.Gravel	6.	9.None
TG PLAN YEAR		**0**
Tif District #		**0**

Sale Data

Sale Date		**3/21/2017**
Price		**20,800**
Sale Type	**1 Land Only**	
1.Land	4.Mobile	7.C/I L&B
2.L & B	5.Other	8.
3.Building	6.C/I Land	9.
Financing	**1 Conventional**	
1.Convent	4.Seller	7.
2.FHA/VA	5.Private	8.
3.Assumed	6.Cash	9.Unknown
Validity	**2 Related Parties**	
1.Valid	4.Split	7.Renovate
2.Related	5.Partial	8.Other
3.Distress	6.Exempt	9.
Verified	**5 Public Record**	
1.Buyer	4.Agent	7.Family
2.Seller	5.Pub Rec	8.Other
3.Lender	6.MLS	9.

Assessment Record

Year	Land	Buildings	Exempt	Total
2007	16,000	0	0	16,000
2008	16,000	0	0	16,000
2009	16,000	0	0	16,000
2012	16,000	0	0	16,000
2013	20,800	0	0	20,800
2015	20,800	0	0	20,800
2018	15,300	0	0	15,300
2019	32,000	0	0	32,000
2020	32,000	0	0	32,000

Land Data

Front Foot	Type	Effective Frontage	Effective Depth	Influence Factor	Influence Code
11.Regular Lot				%	
12.Delta Triangle				%	
13.Nabla Triangle				%	
14.Rear Land				%	
15.Class I Road				%	
				%	
				%	
Square Foot		**Square Feet**			
16.Class II Road				%	
17.Municipal Rese				%	
18.Munic Sep Lago				%	
19.Gravel Pit				%	
20.Industrial Bas				%	
				%	
				%	
Fract. Acre		**Acreage/Sites**			
21.Developed Pave	28	46.00	100	%	0
22.Undev Paved (F	22	1.00	100	%	0
23.Developed Grav				%	
Acres				%	
24.Undev Gravel (				%	
25.Comm Base Pave				%	
26.Comm Base Grav				%	
27.Backlot				%	
28.Rear Land				%	
29.Pavement				%	

Total Acreage 47.00

Influence Codes

1.Unimproved
2.Excess Frtg
3.Topography
4.Size/Shape
5.Access
6.Restriction
7.Open Space
8.View/Environ
9.Fract Share
Acres
30.Utility R O W
31.Tillable
32.Pasture
33.Orchard
34.Softwood F&O
35.Mixed Wood F&O
36.Hardwood F&O
37.Softwood TG
38.Mixed Wood TG
39.Hardwood TG
40.Wasteland
41.Open Space
42.Mobile Home Si
43.Condo Site
44.Lot Improvemen
45.Subdivision Lo
46.Heavy Ind Sit

Washburn

Map Lot 006-020 | Account 901 | Location COFFIN ROAD | Card 1 Of 1 | 11/18/2020

Building Style **0**		
1.Conv.	5.Garrison	9.Gambrel
2.Ranch	6.Salt Box	10.Other
3.R Ranch	7.Contemp	11.Split
4.Cape	8.Log	12.
Dwelling Units **0**		
Other Units **0**		
Stories **0**		
1.1	4.1.5	7.
2.2	5.1.75	8.
3.3	6.2.5	9.
Exterior Walls **0**		
1.Wood	5.Stucco	9.T-111
2.Vin/Al	6.Brick	10.Other
3.Compos.	7.Stone	11.
4.Asbestos	8.Concrete	12.
Roof Surface **0**		
1.Asphalt	4.Composit	7.
2.Slate	5.Wood	8.
3.Metal	6.Other	9.
SF Masonry Trim **0**		
OPEN-3-CUSTOM **0**		
OPEN-4-CUSTOM **0**		
Year Built **0**		
Year Remodeled **0**		
Foundation **0**		
1.Concrete	4.Wood	7.
2.C Block	5.Slab	8.
3.Br/Stone	6.Piers	9.
Basement **0**		
1.1/4 Bmt	4.Full Bmt	7.
2.1/2 Bmt	5.None	8.
3.3/4 Bmt	6.	9.None
Bsmt Gar # Cars **0**		
Wet Basement **0**		
1.Dry	4.	7.
2.Damp	5.	8.
3.Wet	6.	9.

SF Bsmt Living **0**		
Fin Bsmt Grade **0 0**		
OPEN 5 OPTIONAL **0**		
Heat Type **100%** **0**		
1.HWBB	5.FWA	9.No Heat
2.HWCI	6.GravWA	10.
3.H Pump	7.Electric	11.
4.Steam	8.Fl/Wall	12.
Cool Type **0%** **9 None**		
1.Refrig	4.W&C Air	7.
2.Evapor	5.	8.
3.H Pump	6.	9.None
Kitchen Style **0**		
1.Modern	4.Obsolete	7.
2.Typical	5.	8.
3.Old Type	6.	9.None
Bath(s) Style **0**		
1.Modern	4.Obsolete	7.
2.Typical	5.	8.
3.Old Type	6.	9.None
# Rooms **0**		
# Bedrooms **0**		
# Full Baths **0**		
# Half Baths **0**		
# Addn Fixtures **0**		
# Fireplaces **0**		

TRIO Software
A Division of Harris Computer Systems

Layout **0**		
1.Typical	4.	7.
2.Inadeq	5.	8.
3.Poor	6.	9.
Attic **0**		
1.1/4 Fin	4.Full Fin	7.
2.1/2 Fin	5.Fl/Stair	8.
3.3/4 Fin	6.	9.None
Insulation **0**		
1.Full	4.Minimal	7.
2.Heavy	5.Partial	8.
3.Capped	6.	9.None
Unfinished % **0%**		
Grade & Factor **0 0%**		
1.E Grade	4.B Grade	7.
2.D Grade	5.A Grade	8.SC Grade
3.C Grade	6.AA Grade	9.Same
SQFT (Footprint) **0**		
Condition **0**		
1.Poor	4.Avg	7.V G
2.Fair	5.Avg+	8.Exc
3.Avg-	6.Good	9.Same
Phys. % Good **0%**		
Funct. % Good **100%**		
Functional Code **9 None**		
1.Incomp	4.Delap	7.No Power
2.O-Built	5.Bsmt	8.LongTerm
3.Damage	6.Common	9.None
Econ. % Good **100%**		
Economic Code **None**		
0.None	3.No Power	7.
1.Location	4.Generate	8.
2.Encroach	9.None	9.
Entrance Code **0**		
1.Interior	4.Vacant	7.
2.Refusal	5.Estimate	8.
3.Informed	6.Reviewed	9.
Information Code **0**		
1.Owner	4.Agent	7.
2.Relative	5.Estimate	8.
3.Tenant	6.Other	9.

Date Inspected

Additions, Outbuildings & Improvements

Type	Year	Units	Grade	Cond	Phys.	Funct.	Sound Value
					%	%	
					%	%	
					%	%	
					%	%	
					%	%	
					%	%	
					%	%	
					%	%	
					%	%	
					%	%	

1.One Story Fram
2.Two Story Fram
3.Three Story Fr
4.1 & 1/2 Story
5.1 & 3/4 Story
6.2 & 1/2 Story
21.Open Frame Por
22.Encl Frame Por
23.Frame Garage
24.Frame Shed
25.Frame Bay Wind
26.1SFr Overhang
27.Unfin Basement
28.Unfinished Att
29.Finished Attic