Map Lot 004-001 Account 1106 Location GARDNER CREEK ROAD Card 1 Of 1 11/18/2020

TOWN OF WASHBURN

1287 MAIN STREET

WASHBURN ME 04786

## Property Data

Neighborhood **1 Neighborhood One**

Tree Growth Year **0**

1ST MORTGAGE **0**

2ND MORTGAGE **0**

Zone/Land Use **1 Residential**

Secondary Zone

Topography **1 Level**

| | | |
|---|---|---|
| 1.Level | 4.Below St | 7.LevelBog |
| 2.Rolling | 5.Low | 8. |
| 3.Above St | 6.Swampy | 9. |

Utilities **4 Drilled Well** **6 Septic System**

| | | |
|---|---|---|
| 1.Public | 4.Dr Well | 7.Cesspool |
| 2.Water | 5.Dug Well | 8. |
| 3.Sewer | 6.Septic | 9.None |

Street **1 Paved**

| | | |
|---|---|---|
| 1.Paved | 4.Proposed | 7. |
| 2.Semi Imp | 5.R/O/W | 8. |
| 3.Gravel | 6. | 9.None |

TG PLAN YEAR **0**

Tif District # **0**

## Sale Data

Sale Date **6/25/2007**

Price

Sale Type **2 Land & Buildings**

| | | |
|---|---|---|
| 1.Land | 4.Mobile | 7.C/I L&B |
| 2.L & B | 5.Other | 8. |
| 3.Building | 6.C/I Land | 9. |

Financing

| | | |
|---|---|---|
| 1.Convent | 4.Seller | 7. |
| 2.FHA/VA | 5.Private | 8. |
| 3.Assumed | 6.Cash | 9.Unknown |

Validity **3 Distressed Sale**

| | | |
|---|---|---|
| 1.Valid | 4.Split | 7.Renovate |
| 2.Related | 5.Partial | 8.Other |
| 3.Distress | 6.Exempt | 9. |

Verified **5 Public Record**

| | | |
|---|---|---|
| 1.Buyer | 4.Agent | 7.Family |
| 2.Seller | 5.Pub Rec | 8.Other |
| 3.Lender | 6.MLS | 9. |

## Assessment Record

| Year | Land | Buildings | Exempt | Total |
|---|---|---|---|---|
| 2008 | 0 | 0 | 0 | 0 |
| 2009 | 0 | 0 | 0 | 0 |
| 2012 | 0 | 0 | 0 | 0 |
| 2013 | 118,300 | 28,900 | 147,200 | 0 |
| 2015 | 118,300 | 28,900 | 147,200 | 0 |
| 2018 | 118,300 | 28,900 | 147,200 | 0 |
| 2019 | 29,300 | 127,000 | 156,300 | 0 |
| 2020 | 29,300 | 125,600 | 154,900 | 0 |

## Land Data

| Front Foot | Type | Effective Frontage | Effective Depth | Influence Factor | Influence Code |
|---|---|---|---|---|---|
| 11.Regular Lot | | | | % | |
| 12.Delta Triangle | | | | % | |
| 13.Nabla Triangle | | | | % | |
| 14.Rear Land | | | | % | |
| 15.Class I Road | | | | % | |
| | | | | % | |
| | | | | % | |
| **Square Foot** | | **Square Feet** | | | |
| 16.Class II Road | 29 | 5,000 | | 50 % | 0 |
| 17.Municipal Rese | | | | % | |
| 18.Munic Sep Lago | | | | % | |
| 19.Gravel Pit | | | | % | |
| 20.Industrial Bas | | | | % | |
| | | | | % | |
| | | | | % | |
| **Fract. Acre** | | **Acreage/Sites** | | | |
| 21.Developed Pave | 21 | 1.00 | | 100 % | 0 |
| 22.Undev Paved (F | 28 | 13.00 | | 100 % | 0 |
| 23.Developed Grav | | | | % | |
| **Acres** | | | | % | |
| 24.Undev Gravel ( | | | | % | |
| 25.Comm Base Pave | | | | % | |
| 26.Comm Base Grav | | | | % | |
| 27.Backlot | | | | % | |
| 28.Rear Land | | | | % | |
| 29.Pavement | | | | % | |

**Total Acreage** 14.00

### Influence Codes

1.Unimproved
2.Excess Frtg
3.Topography
4.Size/Shape
5.Access
6.Restriction
7.Open Space
8.View/Environ
9.Fract Share

**Acres**

30.Utility R O W
31.Tillable
32.Pasture
33.Orchard
34.Softwood F&O
35.Mixed Wood F&O
36.Hardwood F&O
37.Softwood TG
38.Mixed Wood TG
39.Hardwood TG
40.Wasteland
41.Open Space
42.Mobile Home Si
43.Condo Site
44.Lot Improvemen
45.Subdivision Lo
46.Heavy Ind Sit

Inspection Witnessed By:

X Date

| No./Date | Description | Date Insp. |
|---|---|---|
| | | |
| | | |
| | | |

Notes:

*Warehouse - 15% for size obsol., Loading dock -20% for attached during reval.

**Washburn**

# Washburn

Map Lot 004-001 | Account 1106 | Location GARDNER CREEK ROAD | Card 1 Of 1 | 11/18/2020

| | | |
|---|---|---|
| Building Style **0** | | |
| 1.Conv. | 5.Garrison | 9.Gambrel |
| 2.Ranch | 6.Salt Box | 10.Other |
| 3.R Ranch | 7.Contemp | 11.Split |
| 4.Cape | 8.Log | 12. |
| Dwelling Units **0** | | |
| Other Units **0** | | |
| Stories **0** | | |
| 1.1 | 4.1.5 | 7. |
| 2.2 | 5.1.75 | 8. |
| 3.3 | 6.2.5 | 9. |
| Exterior Walls **0** | | |
| 1.Wood | 5.Stucco | 9.T-111 |
| 2.Vin/Al | 6.Brick | 10.Other |
| 3.Compos. | 7.Stone | 11. |
| 4.Asbestos | 8.Concrete | 12. |
| Roof Surface **0** | | |
| 1.Asphalt | 4.Composit | 7. |
| 2.Slate | 5.Wood | 8. |
| 3.Metal | 6.Other | 9. |
| SF Masonry Trim **0** | | |
| OPEN-3-CUSTOM **0** | | |
| OPEN-4-CUSTOM **0** | | |
| Year Built **0** | | |
| Year Remodeled **0** | | |
| Foundation **0** | | |
| 1.Concrete | 4.Wood | 7. |
| 2.C Block | 5.Slab | 8. |
| 3.Br/Stone | 6.Piers | 9. |
| Basement **0** | | |
| 1.1/4 Bmt | 4.Full Bmt | 7. |
| 2.1/2 Bmt | 5.None | 8. |
| 3.3/4 Bmt | 6. | 9.None |
| Bsmt Gar # Cars **0** | | |
| Wet Basement **0** | | |
| 1.Dry | 4. | 7. |
| 2.Damp | 5. | 8. |
| 3.Wet | 6. | 9. |

| | | |
|---|---|---|
| SF Bsmt Living **0** | | |
| Fin Bsmt Grade **0 0** | | |
| OPEN 5 OPTIONAL **0** | | |
| Heat Type **100%** **0** | | |
| 1.HWBB | 5.FWA | 9.No Heat |
| 2.HWCI | 6.GravWA | 10. |
| 3.H Pump | 7.Electric | 11. |
| 4.Steam | 8.Fl/Wall | 12. |
| Cool Type **0%** **9 None** | | |
| 1.Refrig | 4.W&C Air | 7. |
| 2.Evapor | 5. | 8. |
| 3.H Pump | 6. | 9.None |
| Kitchen Style **0** | | |
| 1.Modern | 4.Obsolete | 7. |
| 2.Typical | 5. | 8. |
| 3.Old Type | 6. | 9.None |
| Bath(s) Style **0** | | |
| 1.Modern | 4.Obsolete | 7. |
| 2.Typical | 5. | 8. |
| 3.Old Type | 6. | 9.None |
| # Rooms **0** | | |
| # Bedrooms **0** | | |
| # Full Baths **0** | | |
| # Half Baths **0** | | |
| # Addn Fixtures **0** | | |
| # Fireplaces **0** | | |

TRIO Software
A Division of Harris Computer Systems

| | | |
|---|---|---|
| Layout **0** | | |
| 1.Typical | 4. | 7. |
| 2.Inadeq | 5. | 8. |
| 3.Poor | 6. | 9. |
| Attic **0** | | |
| 1.1/4 Fin | 4.Full Fin | 7. |
| 2.1/2 Fin | 5.Fl/Stair | 8. |
| 3.3/4 Fin | 6. | 9.None |
| Insulation **0** | | |
| 1.Full | 4.Minimal | 7. |
| 2.Heavy | 5.Partial | 8. |
| 3.Capped | 6. | 9.None |
| Unfinished % **0%** | | |
| Grade & Factor **0 0%** | | |
| 1.E Grade | 4.B Grade | 7. |
| 2.D Grade | 5.A Grade | 8.SC Grade |
| 3.C Grade | 6.AA Grade | 9.Same |
| SQFT (Footprint) **0** | | |
| Condition **0** | | |
| 1.Poor | 4.Avg | 7.V G |
| 2.Fair | 5.Avg+ | 8.Exc |
| 3.Avg- | 6.Good | 9.Same |
| Phys. % Good **0%** | | |
| Funct. % Good **100%** | | |
| Functional Code **9 None** | | |
| 1.Incomp | 4.Delap | 7.No Power |
| 2.O-Built | 5.Bsmt | 8.LongTerm |
| 3.Damage | 6.Common | 9.None |
| Econ. % Good **100%** | | |
| Economic Code **None** | | |
| 0.None | 3.No Power | 7. |
| 1.Location | 4.Generate | 8. |
| 2.Encroach | 9.None | 9. |
| Entrance Code **5 Estimated** | | |
| 1.Interior | 4.Vacant | 7. |
| 2.Refusal | 5.Estimate | 8. |
| 3.Informed | 6.Reviewed | 9. |
| Information Code **5 Estimate** | | |
| 1.Owner | 4.Agent | 7. |
| 2.Relative | 5.Estimate | 8. |
| 3.Tenant | 6.Other | 9. |

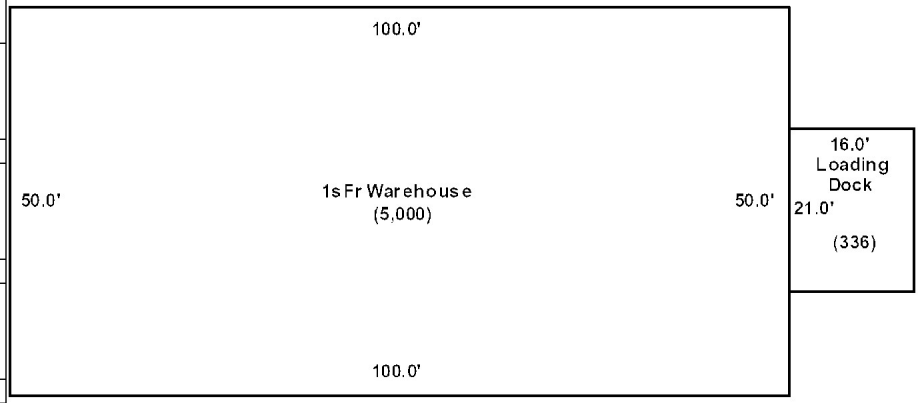


Date Inspected 8/31/2018

## Additions, Outbuildings & Improvements

| Type | Year | Units | Grade | Cond | Phys. | Funct. | Sound Value |
|---|---|---|---|---|---|---|---|
| 161 Loading Dock | 2013 | 336 | 3 100 | 4 | 0 % | 80 % | |
| 222 1S-Warehse Ave | 2013 | 5000 | 3 100 | 4 | 0 % | 85 % | |
| | | | | | % | % | |
| | | | | | % | % | |
| | | | | | % | % | |
| | | | | | % | % | |
| | | | | | % | % | |
| | | | | | % | % | |
| | | | | | % | % | |
| | | | | | % | % | |

1.One Story Fram
2.Two Story Fram
3.Three Story Fr
4.1 & 1/2 Story
5.1 & 3/4 Story
6.2 & 1/2 Story
21.Open Frame Por
22.Encl Frame Por
23.Frame Garage
24.Frame Shed
25.Frame Bay Wind
26.1SFr Overhang
27.Unfin Basement
28.Unfinished Att
29.Finished Attic

Map Lot 004-002 Account 620 Location 139 GARDNER CREEK ROAD Card 1 Of 2 11/18/2020

PINETTE, ROGER J.

P.O. BOX 468

WASHBURN ME 04786
B3448P153

## Property Data

Neighborhood **1 Neighborhood One**

Tree Growth Year **0**

1ST MORTGAGE **0**

2ND MORTGAGE **0**

Zone/Land Use **1 Residential**

Secondary Zone

Topography **1 Level**

| | | |
|---|---|---|
| 1.Level | 4.Below St | 7.LevelBog |
| 2.Rolling | 5.Low | 8. |
| 3.Above St | 6.Swampy | 9. |

Utilities **4 Drilled Well** **6 Septic System**

| | | |
|---|---|---|
| 1.Public | 4.Dr Well | 7.Cesspool |
| 2.Water | 5.Dug Well | 8. |
| 3.Sewer | 6.Septic | 9.None |

Street **1 Paved**

| | | |
|---|---|---|
| 1.Paved | 4.Proposed | 7. |
| 2.Semi Imp | 5.R/O/W | 8. |
| 3.Gravel | 6. | 9.None |

TG PLAN YEAR **0**

Tif District # **0**

## Sale Data

Sale Date

Price

Sale Type

| | | |
|---|---|---|
| 1.Land | 4.Mobile | 7.C/I L&B |
| 2.L & B | 5.Other | 8. |
| 3.Building | 6.C/I Land | 9. |

Financing

| | | |
|---|---|---|
| 1.Convent | 4.Seller | 7. |
| 2.FHA/VA | 5.Private | 8. |
| 3.Assumed | 6.Cash | 9.Unknown |

Validity

| | | |
|---|---|---|
| 1.Valid | 4.Split | 7.Renovate |
| 2.Related | 5.Partial | 8.Other |
| 3.Distress | 6.Exempt | 9. |

Verified

| | | |
|---|---|---|
| 1.Buyer | 4.Agent | 7.Family |
| 2.Seller | 5.Pub Rec | 8.Other |
| 3.Lender | 6.MLS | 9. |

## Assessment Record

| Year | Land | Buildings | Exempt | Total |
|---|---|---|---|---|
| 2007 | 5,700 | 14,800 | 0 | 20,500 |
| 2008 | 5,700 | 14,800 | 0 | 20,500 |
| 2009 | 5,700 | 14,800 | 0 | 20,500 |
| 2012 | 5,700 | 14,800 | 0 | 20,500 |
| 2013 | 7,400 | 14,800 | 0 | 22,200 |
| 2015 | 7,400 | 14,800 | 0 | 22,200 |
| 2018 | 7,400 | 14,800 | 0 | 22,200 |
| 2019 | 17,600 | 17,500 | 0 | 35,100 |
| 2020 | 17,600 | 17,500 | 0 | 35,100 |

## Land Data

| Front Foot | Type | Effective Frontage | Effective Depth | Influence Factor | Influence Code |
|---|---|---|---|---|---|
| 11.Regular Lot | | | | % | |
| 12.Delta Triangle | | | | % | |
| 13.Nabla Triangle | | | | % | |
| 14.Rear Land | | | | % | |
| 15.Class I Road | | | | % | |
| | | | | % | |
| | | | | % | |
| **Square Foot** | | **Square Feet** | | | |
| 16.Class II Road | | | | % | |
| 17.Municipal Rese | | | | % | |
| 18.Munic Sep Lago | | | | % | |
| 19.Gravel Pit | | | | % | |
| 20.Industrial Bas | | | | % | |
| | | | | % | |
| | | | | % | |
| **Fract. Acre** | | **Acreage/Sites** | | | |
| 21.Developed Pave | 21 | 1.00 | 100 | % | 0 |
| 22.Undev Paved (F | 28 | 2.10 | 100 | % | 0 |
| 23.Developed Grav | | | | % | |
| **Acres** | | | | % | |
| 24.Undev Gravel ( | | | | % | |
| 25.Comm Base Pave | | | | % | |
| 26.Comm Base Grav | | | | % | |
| 27.Backlot | | | | % | |
| 28.Rear Land | | | | % | |
| 29.Pavement | | | | % | |

**Total Acreage** 3.10

### Influence Codes

1.Unimproved
2.Excess Frtg
3.Topography
4.Size/Shape
5.Access
6.Restriction
7.Open Space
8.View/Environ
9.Fract Share
**Acres**
30.Utility R O W
31.Tillable
32.Pasture
33.Orchard
34.Softwood F&O
35.Mixed Wood F&O
36.Hardwood F&O
37.Softwood TG
38.Mixed Wood TG
39.Hardwood TG
40.Wasteland
41.Open Space
42.Mobile Home Si
43.Condo Site
44.Lot Improvemen
45.Subdivision Lo
46.Heavy Ind Sit

Inspection Witnessed By:

X Date

| No./Date | Description | Date Insp. |
|---|---|---|
| | | |
| | | |
| | | |

Notes:

*12x24 MH - 15% for size obsol. Garage -80% for delap. during reval.

**Washburn**

# Washburn

Map Lot 004-002 | Account 620 | Location 139 GARDNER CREEK ROAD | Card 1 Of 2 | 11/18/2020

| | | | |
|---|---|---|---|
| Building Style | **4 Cape Cod** | | |
| 1.Conv. | 5.Garrison | 9.Gambrel | |
| 2.Ranch | 6.Salt Box | 10.Other | |
| 3.R Ranch | 7.Contemp | 11.Split | |
| 4.Cape | 8.Log | 12. | |
| Dwelling Units | **1** | | |
| Other Units | **0** | | |
| Stories | **1 One Story** | | |
| 1.1 | 4.1.5 | 7. | |
| 2.2 | 5.1.75 | 8. | |
| 3.3 | 6.2.5 | 9. | |
| Exterior Walls | **2 Vinyl/Aluminum** | | |
| 1.Wood | 5.Stucco | 9.T-111 | |
| 2.Vin/Al | 6.Brick | 10.Other | |
| 3.Compos. | 7.Stone | 11. | |
| 4.Asbestos | 8.Concrete | 12. | |
| Roof Surface | **3 Sheet Metal** | | |
| 1.Asphalt | 4.Composit | 7. | |
| 2.Slate | 5.Wood | 8. | |
| 3.Metal | 6.Other | 9. | |
| SF Masonry Trim | **0** | | |
| OPEN-3-CUSTOM | **0** | | |
| OPEN-4-CUSTOM | **0** | | |
| Year Built | **1940** | | |
| Year Remodeled | **0** | | |
| Foundation | **1 Concrete** | | |
| 1.Concrete | 4.Wood | 7. | |
| 2.C Block | 5.Slab | 8. | |
| 3.Br/Stone | 6.Piers | 9. | |
| Basement | **2 1/2 Basement** | | |
| 1.1/4 Bmt | 4.Full Bmt | 7. | |
| 2.1/2 Bmt | 5.None | 8. | |
| 3.3/4 Bmt | 6. | 9.None | |
| Bsmt Gar # Cars | **0** | | |
| Wet Basement | **3 Wet Basement** | | |
| 1.Dry | 4. | 7. | |
| 2.Damp | 5. | 8. | |
| 3.Wet | 6. | 9. | |

| | | | |
|---|---|---|---|
| SF Bsmt Living | **0** | | |
| Fin Bsmt Grade | **0 0** | | |
| OPEN 5 OPTIONAL | **0** | | |
| Heat Type | **100%** | **5 Forced Warm Air** | |
| 1.HWBB | 5.FWA | 9.No Heat | |
| 2.HWCI | 6.GravWA | 10. | |
| 3.H Pump | 7.Electric | 11. | |
| 4.Steam | 8.Fl/Wall | 12. | |
| Cool Type | **0%** | **9 None** | |
| 1.Refrig | 4.W&C Air | 7. | |
| 2.Evapor | 5. | 8. | |
| 3.H Pump | 6. | 9.None | |
| Kitchen Style | **2 Typical** | | |
| 1.Modern | 4.Obsolete | 7. | |
| 2.Typical | 5. | 8. | |
| 3.Old Type | 6. | 9.None | |
| Bath(s) Style | **2 Typical Bath(s)** | | |
| 1.Modern | 4.Obsolete | 7. | |
| 2.Typical | 5. | 8. | |
| 3.Old Type | 6. | 9.None | |
| # Rooms | **5** | | |
| # Bedrooms | **2** | | |
| # Full Baths | **1** | | |
| # Half Baths | **0** | | |
| # Addn Fixtures | **0** | | |
| # Fireplaces | **0** | | |

TRIO Software
A Division of Harris Computer Systems

| | | | |
|---|---|---|---|
| Layout | **1 Typical** | | |
| 1.Typical | 4. | 7. | |
| 2.Inadeq | 5. | 8. | |
| 3.Poor | 6. | 9. | |
| Attic | **9 None** | | |
| 1.1/4 Fin | 4.Full Fin | 7. | |
| 2.1/2 Fin | 5.Fl/Stair | 8. | |
| 3.3/4 Fin | 6. | 9.None | |
| Insulation | **4 Minimal** | | |
| 1.Full | 4.Minimal | 7. | |
| 2.Heavy | 5.Partial | 8. | |
| 3.Capped | 6. | 9.None | |
| Unfinished % | **0%** | | |
| Grade & Factor | **2 Fair 100%** | | |
| 1.E Grade | 4.B Grade | 7. | |
| 2.D Grade | 5.A Grade | 8.SC Grade | |
| 3.C Grade | 6.AA Grade | 9.Same | |
| SQFT (Footprint) | **812** | | |
| Condition | **3 Below Average** | | |
| 1.Poor | 4.Avg | 7.V G | |
| 2.Fair | 5.Avg+ | 8.Exc | |
| 3.Avg- | 6.Good | 9.Same | |
| Phys. % Good | **0%** | | |
| Funct. % Good | **80%** | | |
| Functional Code | **4 Delapidation** | | |
| 1.Incomp | 4.Delap | 7.No Power | |
| 2.O-Built | 5.Bsmt | 8.LongTerm | |
| 3.Damage | 6.Common | 9.None | |
| Econ. % Good | **100%** | | |
| Economic Code | **None** | | |
| 0.None | 3.No Power | 7. | |
| 1.Location | 4.Generate | 8. | |
| 2.Encroach | 9.None | 9. | |
| Entrance Code | **3 Information Only** | | |
| 1.Interior | 4.Vacant | 7. | |
| 2.Refusal | 5.Estimate | 8. | |
| 3.Informed | 6.Reviewed | 9. | |
| Information Code | **1 Owner** | | |
| 1.Owner | 4.Agent | 7. | |
| 2.Relative | 5.Estimate | 8. | |
| 3.Tenant | 6.Other | 9. | |

Date Inspected 8/31/2018

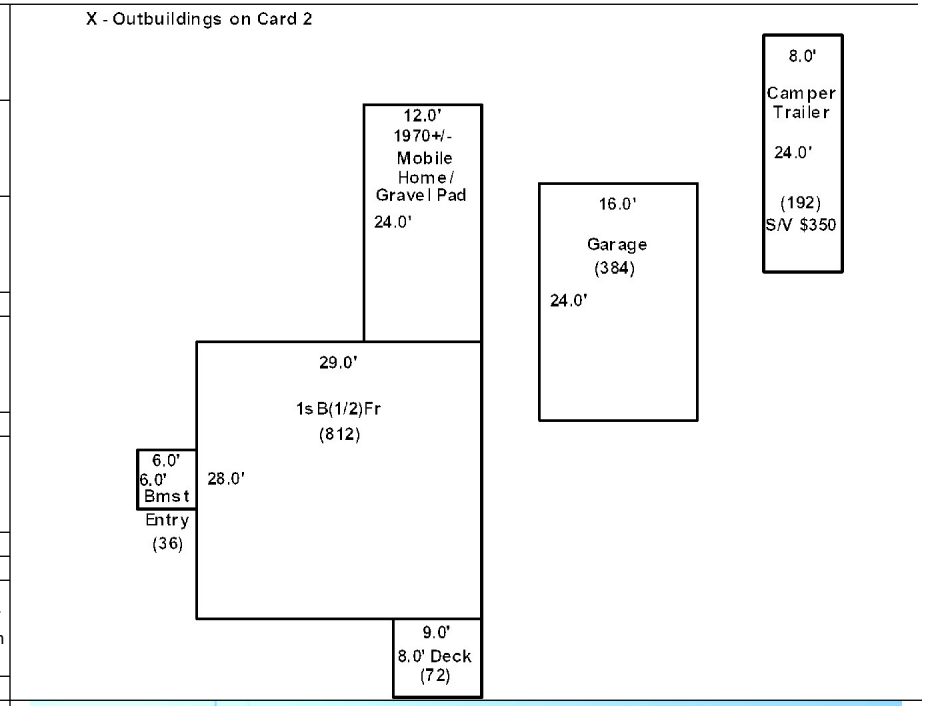

## Additions, Outbuildings & Improvements

| Type | Year | Units | Grade | Cond | Phys. | Funct. | Sound Value |
|---|---|---|---|---|---|---|---|
| 68 Wood Deck | 1990 | 72 | 0 0 | 0 | 0 % | 0 % | |
| 40 Basement Entry | 0 | 36 | 0 0 | 0 | 0 % | 0 % | |
| 997 12Mobile Home | 1970 | 12x24 | 3 100 | 2 | 0 % | 85 % | |
| 23 Frame Garage | 1950 | 384 | 2 100 | 2 | 0 % | 20 % | |
| 85 Camper Trlr | 0 | | | | % | % | 350 |
| | | | | | % | % | |
| | | | | | % | % | |
| | | | | | % | % | |
| | | | | | % | % | |
| | | | | | % | % | |

1.One Story Fram
2.Two Story Fram
3.Three Story Fr
4.1 & 1/2 Story
5.1 & 3/4 Story
6.2 & 1/2 Story
21.Open Frame Por
22.Encl Frame Por
23.Frame Garage
24.Frame Shed
25.Frame Bay Wind
26.1SFr Overhang
27.Unfin Basement
28.Unfinished Att
29.Finished Attic

Map Lot 004-002 | Account 620 | Location 139 GARDNER CREEK ROAD | Card 2 Of 2 | 11/18/2020

PINETTE, ROGER J.

P.O. BOX 468

WASHBURN ME 04786
B3448P153

## Property Data

Neighborhood **1 Neighborhood One**

Tree Growth Year **0**

1ST MORTGAGE **0**

2ND MORTGAGE **0**

Zone/Land Use **1 Residential**

Secondary Zone

Topography **1 Level**

| | | |
|---|---|---|
| 1.Level | 4.Below St | 7.LevelBog |
| 2.Rolling | 5.Low | 8. |
| 3.Above St | 6.Swampy | 9. |

Utilities **4 Drilled Well** **6 Septic System**

| | | |
|---|---|---|
| 1.Public | 4.Dr Well | 7.Cesspool |
| 2.Water | 5.Dug Well | 8. |
| 3.Sewer | 6.Septic | 9.None |

Street **1 Paved**

| | | |
|---|---|---|
| 1.Paved | 4.Proposed | 7. |
| 2.Semi Imp | 5.R/O/W | 8. |
| 3.Gravel | 6. | 9.None |

TG PLAN YEAR **0**

Tif District # **0**

## Sale Data

Sale Date

Price

Sale Type

| | | |
|---|---|---|
| 1.Land | 4.Mobile | 7.C/I L&B |
| 2.L & B | 5.Other | 8. |
| 3.Building | 6.C/I Land | 9. |

Financing

| | | |
|---|---|---|
| 1.Convent | 4.Seller | 7. |
| 2.FHA/VA | 5.Private | 8. |
| 3.Assumed | 6.Cash | 9.Unknown |

Validity

| | | |
|---|---|---|
| 1.Valid | 4.Split | 7.Renovate |
| 2.Related | 5.Partial | 8.Other |
| 3.Distress | 6.Exempt | 9. |

Verified

| | | |
|---|---|---|
| 1.Buyer | 4.Agent | 7.Family |
| 2.Seller | 5.Pub Rec | 8.Other |
| 3.Lender | 6.MLS | 9. |

## Assessment Record

| Year | Land | Buildings | Exempt | Total |
|---|---|---|---|---|
| 2019 | 0 | 3,500 | 0 | 3,500 |
| 2020 | 0 | 3,500 | 0 | 3,500 |

## Land Data

| Front Foot | Type | Effective Frontage | Effective Depth | Influence Factor | Influence Code |
|---|---|---|---|---|---|
| 11.Regular Lot | | | | % | |
| 12.Delta Triangle | | | | % | |
| 13.Nabla Triangle | | | | % | |
| 14.Rear Land | | | | % | |
| 15.Class I Road | | | | % | |
| | | | | % | |
| | | | | % | |
| **Square Foot** | | **Square Feet** | | | |
| 16.Class II Road | | | | % | |
| 17.Municipal Rese | | | | % | |
| 18.Munic Sep Lago | | | | % | |
| 19.Gravel Pit | | | | % | |
| 20.Industrial Bas | | | | % | |
| | | | | % | |
| | | | | % | |
| **Fract. Acre** | | **Acreage/Sites** | | | |
| 21.Developed Pave | | | | % | |
| 22.Undev Paved (F | | | | % | |
| 23.Developed Grav | | | | % | |
| **Acres** | | | | % | |
| 24.Undev Gravel ( | | | | % | |
| 25.Comm Base Pave | | | | % | |
| 26.Comm Base Grav | | | | % | |
| 27.Backlot | | | | % | |
| 28.Rear Land | | | | % | |
| 29.Pavement | | | | % | |

**Total Acreage** 0.00

### Influence Codes

1.Unimproved
2.Excess Frtg
3.Topography
4.Size/Shape
5.Access
6.Restriction
7.Open Space
8.View/Environ
9.Fract Share
**Acres**
30.Utility R O W
31.Tillable
32.Pasture
33.Orchard
34.Softwood F&O
35.Mixed Wood F&O
36.Hardwood F&O
37.Softwood TG
38.Mixed Wood TG
39.Hardwood TG
40.Wasteland
41.Open Space
42.Mobile Home Si
43.Condo Site
44.Lot Improvemen
45.Subdivision Lo
46.Heavy Ind Sit

Inspection Witnessed By:

X Date

| No./Date | Description | Date Insp. |
|---|---|---|
| | | |
| | | |
| | | |

Notes:
*Garage -80% for delap. + -15% for size obsol. during reval.

**Washburn**

# Washburn

Map Lot 004-002 | Account 620 | Location 139 GARDNER CREEK ROAD | Card 2 Of 2 | 11/18/2020

| Building Style | | |
|---|---|---|
| 1.Conv. | 5.Garrison | 9.Gambrel |
| 2.Ranch | 6.Salt Box | 10.Other |
| 3.R Ranch | 7.Contemp | 11.Split |
| 4.Cape | 8.Log | 12. |

Dwelling Units

Other Units

| Stories | | |
|---|---|---|
| 1.1 | 4.1.5 | 7. |
| 2.2 | 5.1.75 | 8. |
| 3.3 | 6.2.5 | 9. |

| Exterior Walls | | |
|---|---|---|
| 1.Wood | 5.Stucco | 9.T-111 |
| 2.Vin/Al | 6.Brick | 10.Other |
| 3.Compos. | 7.Stone | 11. |
| 4.Asbestos | 8.Concrete | 12. |

| Roof Surface | | |
|---|---|---|
| 1.Asphalt | 4.Composit | 7. |
| 2.Slate | 5.Wood | 8. |
| 3.Metal | 6.Other | 9. |

SF Masonry Trim

OPEN-3-CUSTOM

OPEN-4-CUSTOM

Year Built

Year Remodeled

| Foundation | | |
|---|---|---|
| 1.Concrete | 4.Wood | 7. |
| 2.C Block | 5.Slab | 8. |
| 3.Br/Stone | 6.Piers | 9. |

| Basement | | |
|---|---|---|
| 1.1/4 Bmt | 4.Full Bmt | 7. |
| 2.1/2 Bmt | 5.None | 8. |
| 3.3/4 Bmt | 6. | 9.None |

Bsmt Gar # Cars

| Wet Basement | | |
|---|---|---|
| 1.Dry | 4. | 7. |
| 2.Damp | 5. | 8. |
| 3.Wet | 6. | 9. |

SF Bsmt Living

Fin Bsmt Grade

OPEN 5 OPTIONAL

| Heat Type **100%** | | |
|---|---|---|
| 1.HWBB | 5.FWA | 9.No Heat |
| 2.HWCI | 6.GravWA | 10. |
| 3.H Pump | 7.Electric | 11. |
| 4.Steam | 8.Fl/Wall | 12. |

| Cool Type **0%** | | |
|---|---|---|
| 1.Refrig | 4.W&C Air | 7. |
| 2.Evapor | 5. | 8. |
| 3.H Pump | 6. | 9.None |

| Kitchen Style | | |
|---|---|---|
| 1.Modern | 4.Obsolete | 7. |
| 2.Typical | 5. | 8. |
| 3.Old Type | 6. | 9.None |

| Bath(s) Style | | |
|---|---|---|
| 1.Modern | 4.Obsolete | 7. |
| 2.Typical | 5. | 8. |
| 3.Old Type | 6. | 9.None |

# Rooms

# Bedrooms

# Full Baths

# Half Baths

# Addn Fixtures

# Fireplaces

TRIO Software
A Division of Harris Computer Systems

| Layout | | |
|---|---|---|
| 1.Typical | 4. | 7. |
| 2.Inadeq | 5. | 8. |
| 3.Poor | 6. | 9. |

| Attic | | |
|---|---|---|
| 1.1/4 Fin | 4.Full Fin | 7. |
| 2.1/2 Fin | 5.Fl/Stair | 8. |
| 3.3/4 Fin | 6. | 9.None |

| Insulation | | |
|---|---|---|
| 1.Full | 4.Minimal | 7. |
| 2.Heavy | 5.Partial | 8. |
| 3.Capped | 6. | 9.None |

Unfinished %

| Grade & Factor | | |
|---|---|---|
| 1.E Grade | 4.B Grade | 7. |
| 2.D Grade | 5.A Grade | 8.SC Grade |
| 3.C Grade | 6.AA Grade | 9.Same |

SQFT (Footprint)

| Condition | | |
|---|---|---|
| 1.Poor | 4.Avg | 7.V G |
| 2.Fair | 5.Avg+ | 8.Exc |
| 3.Avg- | 6.Good | 9.Same |

Phys. % Good

Funct. % Good

| Functional Code | | |
|---|---|---|
| 1.Incomp | 4.Delap | 7.No Power |
| 2.O-Built | 5.Bsmt | 8.LongTerm |
| 3.Damage | 6.Common | 9.None |

Econ. % Good

| Economic Code | | |
|---|---|---|
| 0.None | 3.No Power | 7. |
| 1.Location | 4.Generate | 8. |
| 2.Encroach | 9.None | 9. |

| Entrance Code **3 Information Only** | | |
|---|---|---|
| 1.Interior | 4.Vacant | 7. |
| 2.Refusal | 5.Estimate | 8. |
| 3.Informed | 6.Reviewed | 9. |

| Information Code **1 Owner** | | |
|---|---|---|
| 1.Owner | 4.Agent | 7. |
| 2.Relative | 5.Estimate | 8. |
| 3.Tenant | 6.Other | 9. |

Date Inspected 8/31/2018

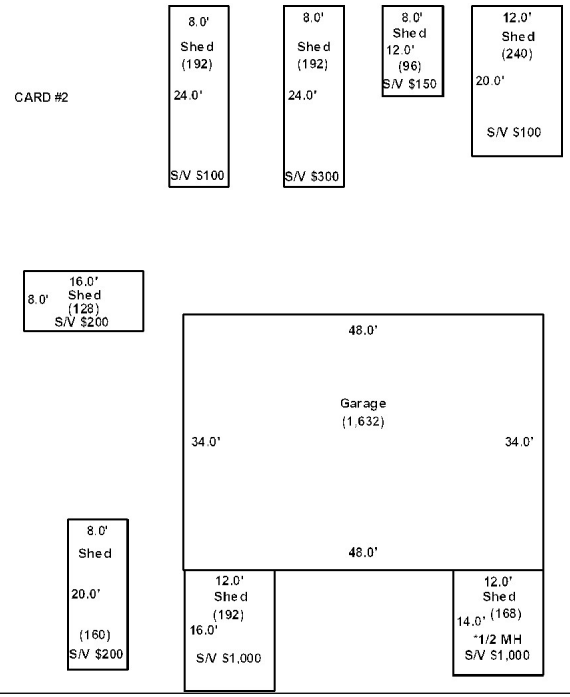


## Additions, Outbuildings & Improvements

| Type | Year | Units | Grade | Cond | Phys. | Funct. | Sound Value |
|---|---|---|---|---|---|---|---|
| 24 Frame Shed | 0 | | | | % | % | 1,000 |
| 24 Frame Shed | 0 | | | | % | % | 1,000 |
| 23 Frame Garage | 1950 | 1632 | 2 90 | 2 | 0 % | 5 % | |
| 24 Frame Shed | 0 | | | | % | % | 200 |
| 24 Frame Shed | 0 | | | | % | % | 200 |
| 24 Frame Shed | 0 | | | | % | % | 100 |
| 24 Frame Shed | 0 | | | | % | % | 300 |
| 24 Frame Shed | 0 | | | | % | % | 150 |
| 24 Frame Shed | 0 | | | | % | % | 100 |
| | | | | | % | % | |

1.One Story Fram
2.Two Story Fram
3.Three Story Fr
4.1 & 1/2 Story
5.1 & 3/4 Story
6.2 & 1/2 Story
21.Open Frame Por
22.Encl Frame Por
23.Frame Garage
24.Frame Shed
25.Frame Bay Wind
26.1SFr Overhang
27.Unfin Basement
28.Unfinished Att
29.Finished Attic

Map Lot 004-002A | Account 619 | Location 143 GARDNER CREEK ROAD | Card 1 Of 1 | 11/18/2020

PINETTE, ROGER J.

P.O. BOX 468

WASHBURN ME 04786
B3448P153

## Property Data

Neighborhood **1 Neighborhood One**

Tree Growth Year **0**

1ST MORTGAGE **0**

2ND MORTGAGE **0**

Zone/Land Use **1 Residential**

Secondary Zone

Topography **1 Level**

| | | |
|---|---|---|
| 1.Level | 4.Below St | 7.LevelBog |
| 2.Rolling | 5.Low | 8. |
| 3.Above St | 6.Swampy | 9. |

Utilities

| | | |
|---|---|---|
| 1.Public | 4.Dr Well | 7.Cesspool |
| 2.Water | 5.Dug Well | 8. |
| 3.Sewer | 6.Septic | 9.None |

Street **1 Paved**

| | | |
|---|---|---|
| 1.Paved | 4.Proposed | 7. |
| 2.Semi Imp | 5.R/O/W | 8. |
| 3.Gravel | 6. | 9.None |

TG PLAN YEAR **0**

Tif District # **0**

## Sale Data

Sale Date **10/11/2000**

Price

Sale Type **2 Land & Buildings**

| | | |
|---|---|---|
| 1.Land | 4.Mobile | 7.C/I L&B |
| 2.L & B | 5.Other | 8. |
| 3.Building | 6.C/I Land | 9. |

Financing

| | | |
|---|---|---|
| 1.Convent | 4.Seller | 7. |
| 2.FHA/VA | 5.Private | 8. |
| 3.Assumed | 6.Cash | 9.Unknown |

Validity **2 Related Parties**

| | | |
|---|---|---|
| 1.Valid | 4.Split | 7.Renovate |
| 2.Related | 5.Partial | 8.Other |
| 3.Distress | 6.Exempt | 9. |

Verified **5 Public Record**

| | | |
|---|---|---|
| 1.Buyer | 4.Agent | 7.Family |
| 2.Seller | 5.Pub Rec | 8.Other |
| 3.Lender | 6.MLS | 9. |

## Assessment Record

| Year | Land | Buildings | Exempt | Total |
|---|---|---|---|---|
| 2007 | 7,800 | 25,200 | 13,000 | 20,000 |
| 2008 | 7,800 | 25,200 | 13,000 | 20,000 |
| 2009 | 7,800 | 25,200 | 9,000 | 24,000 |
| 2012 | 7,800 | 25,200 | 8,800 | 24,200 |
| 2013 | 7,800 | 25,200 | 8,800 | 24,200 |
| 2015 | 7,800 | 25,200 | 9,000 | 24,000 |
| 2018 | 7,800 | 25,200 | 18,400 | 14,600 |
| 2019 | 16,500 | 4,700 | 20,000 | 1,200 |
| 2020 | 16,500 | 4,700 | 21,200 | 0 |

## Land Data

| Front Foot | Type | Effective Frontage | Effective Depth | Influence Factor | Influence Code |
|---|---|---|---|---|---|
| 11.Regular Lot | | | | % | |
| 12.Delta Triangle | | | | % | |
| 13.Nabla Triangle | | | | % | |
| 14.Rear Land | | | | % | |
| 15.Class I Road | | | | % | |
| | | | | % | |
| | | | | % | |
| **Square Foot** | | **Square Feet** | | | |
| 16.Class II Road | | | | % | |
| 17.Municipal Rese | | | | % | |
| 18.Munic Sep Lago | | | | % | |
| 19.Gravel Pit | | | | % | |
| 20.Industrial Bas | | | | % | |
| | | | | % | |
| | | | | % | |
| **Fract. Acre** | | **Acreage/Sites** | | | |
| 21.Developed Pave | 22 | 2.00 | 100 | % | 0 |
| 22.Undev Paved (F | 28 | 7.45 | 100 | % | 0 |
| 23.Developed Grav | | | | % | |
| **Acres** | | | | % | |
| 24.Undev Gravel ( | | | | % | |
| 25.Comm Base Pave | | | | % | |
| 26.Comm Base Grav | | | | % | |
| 27.Backlot | | | | % | |
| 28.Rear Land | | | | % | |
| 29.Pavement | | | | % | |

**Total Acreage** 9.45

### Influence Codes

1.Unimproved
2.Excess Frtg
3.Topography
4.Size/Shape
5.Access
6.Restriction
7.Open Space
8.View/Environ
9.Fract Share
**Acres**
30.Utility R O W
31.Tillable
32.Pasture
33.Orchard
34.Softwood F&O
35.Mixed Wood F&O
36.Hardwood F&O
37.Softwood TG
38.Mixed Wood TG
39.Hardwood TG
40.Wasteland
41.Open Space
42.Mobile Home Si
43.Condo Site
44.Lot Improvemen
45.Subdivision Lo
46.Heavy Ind Sit

Inspection Witnessed By:

X Date

| No./Date | Description | Date Insp. |
|---|---|---|
| | | |
| | | |
| | | |

Notes:
*Shed -20% for attached during reval.
**Commercial junkyard.

**Washburn**

# Washburn

Map Lot 004-002A | Account 619 | Location 143 GARDNER CREEK ROAD | Card 1 Of 1 | 11/18/2020

| | | |
|---|---|---|
| Building Style **0** | | |
| 1.Conv. | 5.Garrison | 9.Gambrel |
| 2.Ranch | 6.Salt Box | 10.Other |
| 3.R Ranch | 7.Contemp | 11.Split |
| 4.Cape | 8.Log | 12. |
| Dwelling Units **0** | | |
| Other Units **0** | | |
| Stories **0** | | |
| 1.1 | 4.1.5 | 7. |
| 2.2 | 5.1.75 | 8. |
| 3.3 | 6.2.5 | 9. |
| Exterior Walls **0** | | |
| 1.Wood | 5.Stucco | 9.T-111 |
| 2.Vin/Al | 6.Brick | 10.Other |
| 3.Compos. | 7.Stone | 11. |
| 4.Asbestos | 8.Concrete | 12. |
| Roof Surface **0** | | |
| 1.Asphalt | 4.Composit | 7. |
| 2.Slate | 5.Wood | 8. |
| 3.Metal | 6.Other | 9. |
| SF Masonry Trim **0** | | |
| OPEN-3-CUSTOM **0** | | |
| OPEN-4-CUSTOM **0** | | |
| Year Built **0** | | |
| Year Remodeled **0** | | |
| Foundation **0** | | |
| 1.Concrete | 4.Wood | 7. |
| 2.C Block | 5.Slab | 8. |
| 3.Br/Stone | 6.Piers | 9. |
| Basement **0** | | |
| 1.1/4 Bmt | 4.Full Bmt | 7. |
| 2.1/2 Bmt | 5.None | 8. |
| 3.3/4 Bmt | 6. | 9.None |
| Bsmt Gar # Cars **0** | | |
| Wet Basement **0** | | |
| 1.Dry | 4. | 7. |
| 2.Damp | 5. | 8. |
| 3.Wet | 6. | 9. |

| | | |
|---|---|---|
| SF Bsmt Living **0** | | |
| Fin Bsmt Grade **0 0** | | |
| OPEN 5 OPTIONAL **0** | | |
| Heat Type **100%** **0** | | |
| 1.HWBB | 5.FWA | 9.No Heat |
| 2.HWCI | 6.GravWA | 10. |
| 3.H Pump | 7.Electric | 11. |
| 4.Steam | 8.Fl/Wall | 12. |
| Cool Type **0%** **9 None** | | |
| 1.Refrig | 4.W&C Air | 7. |
| 2.Evapor | 5. | 8. |
| 3.H Pump | 6. | 9.None |
| Kitchen Style **0** | | |
| 1.Modern | 4.Obsolete | 7. |
| 2.Typical | 5. | 8. |
| 3.Old Type | 6. | 9.None |
| Bath(s) Style **0** | | |
| 1.Modern | 4.Obsolete | 7. |
| 2.Typical | 5. | 8. |
| 3.Old Type | 6. | 9.None |
| # Rooms **0** | | |
| # Bedrooms **0** | | |
| # Full Baths **0** | | |
| # Half Baths **0** | | |
| # Addn Fixtures **0** | | |
| # Fireplaces **0** | | |

TRIO Software
A Division of Harris Computer Systems

| | | |
|---|---|---|
| Layout **0** | | |
| 1.Typical | 4. | 7. |
| 2.Inadeq | 5. | 8. |
| 3.Poor | 6. | 9. |
| Attic **0** | | |
| 1.1/4 Fin | 4.Full Fin | 7. |
| 2.1/2 Fin | 5.Fl/Stair | 8. |
| 3.3/4 Fin | 6. | 9.None |
| Insulation **0** | | |
| 1.Full | 4.Minimal | 7. |
| 2.Heavy | 5.Partial | 8. |
| 3.Capped | 6. | 9.None |
| Unfinished % **0%** | | |
| Grade & Factor **0 0%** | | |
| 1.E Grade | 4.B Grade | 7. |
| 2.D Grade | 5.A Grade | 8.SC Grade |
| 3.C Grade | 6.AA Grade | 9.Same |
| SQFT (Footprint) **0** | | |
| Condition **0** | | |
| 1.Poor | 4.Avg | 7.V G |
| 2.Fair | 5.Avg+ | 8.Exc |
| 3.Avg- | 6.Good | 9.Same |
| Phys. % Good **0%** | | |
| Funct. % Good **100%** | | |
| Functional Code **9 None** | | |
| 1.Incomp | 4.Delap | 7.No Power |
| 2.O-Built | 5.Bsmt | 8.LongTerm |
| 3.Damage | 6.Common | 9.None |
| Econ. % Good **100%** | | |
| Economic Code **None** | | |
| 0.None | 3.No Power | 7. |
| 1.Location | 4.Generate | 8. |
| 2.Encroach | 9.None | 9. |
| Entrance Code **5 Estimated** | | |
| 1.Interior | 4.Vacant | 7. |
| 2.Refusal | 5.Estimate | 8. |
| 3.Informed | 6.Reviewed | 9. |
| Information Code **5 Estimate** | | |
| 1.Owner | 4.Agent | 7. |
| 2.Relative | 5.Estimate | 8. |
| 3.Tenant | 6.Other | 9. |

Date Inspected 8/31/2018

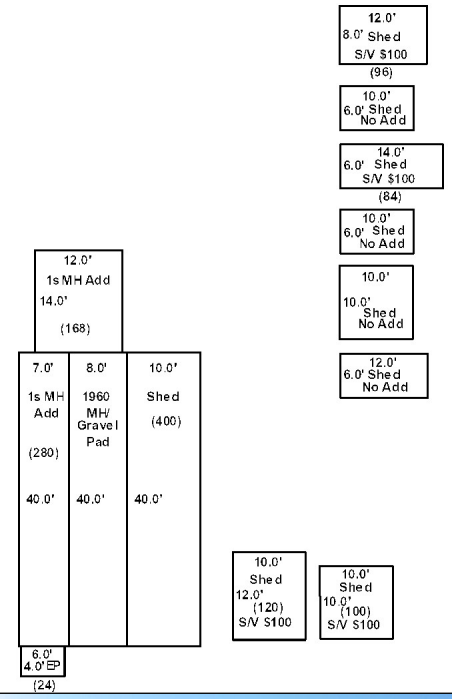

## Additions, Outbuildings & Improvements

| Type | Year | Units | Grade | Cond | Phys. | Funct. | Sound Value |
|---|---|---|---|---|---|---|---|
| 18 1 S-MH add | 1965 | 280 | 2 100 | 1 | 0 % | 100 % | |
| 18 1 S-MH add | 1965 | 168 | 2 100 | 1 | 0 % | 100 % | |
| 995 8Mobile Home | 1960 | 8x40 | 3 100 | 4 | 0 % | 100 % | |
| 24 Frame Shed | 1950 | 400 | 1 100 | 1 | 0 % | 80 % | |
| 24 Frame Shed | 0 | | | | % | % | 100 |
| 24 Frame Shed | 0 | | | | % | % | 100 |
| 24 Frame Shed | 0 | | | | % | % | 100 |
| 24 Frame Shed | 0 | | | | % | % | 100 |
| 22 Encl Frame Porch | 1965 | 0 | 2 100 | 2 | 0 % | 100 % | |
| | | | | | % | % | |

1.One Story Fram
2.Two Story Fram
3.Three Story Fr
4.1 & 1/2 Story
5.1 & 3/4 Story
6.2 & 1/2 Story
21.Open Frame Por
22.Encl Frame Por
23.Frame Garage
24.Frame Shed
25.Frame Bay Wind
26.1SFr Overhang
27.Unfin Basement
28.Unfinished Att
29.Finished Attic

Map Lot 004-002A/ON Account 886 Location 181 GARDNER CREEK ROAD Card 1 Of 1 11/18/2020

TARBOX, RENA

181 GARDNER CREEK ROAD

WASHBURN ME 04786

Previous Owner
Tarbox, Nathenial
Tarbox, Tanya
181 Gardner Creek Rd
Washburn ME 04786
Sale Date: 3/28/2013

Inspection Witnessed By:

X Date

| No./Date | Description | Date Insp. |
|---|---|---|
| | | |
| | | |
| | | |

Notes:

## Property Data

Neighborhood **1 Neighborhood One**

Tree Growth Year **0**

1ST MORTGAGE **0**

2ND MORTGAGE **0**

Zone/Land Use **1 Residential**

Secondary Zone

Topography **1 Level**

| | | |
|---|---|---|
| 1.Level | 4.Below St | 7.LevelBog |
| 2.Rolling | 5.Low | 8. |
| 3.Above St | 6.Swampy | 9. |

Utilities **4 Drilled Well** **6 Septic System**

| | | |
|---|---|---|
| 1.Public | 4.Dr Well | 7.Cesspool |
| 2.Water | 5.Dug Well | 8. |
| 3.Sewer | 6.Septic | 9.None |

Street **1 Paved**

| | | |
|---|---|---|
| 1.Paved | 4.Proposed | 7. |
| 2.Semi Imp | 5.R/O/W | 8. |
| 3.Gravel | 6. | 9.None |

TG PLAN YEAR **0**

Tif District # **0**

## Sale Data

Sale Date **3/28/2013**

Price

Sale Type **4 Mobile Home**

| | | |
|---|---|---|
| 1.Land | 4.Mobile | 7.C/I L&B |
| 2.L & B | 5.Other | 8. |
| 3.Building | 6.C/I Land | 9. |

Financing **9 Unknown**

| | | |
|---|---|---|
| 1.Convent | 4.Seller | 7. |
| 2.FHA/VA | 5.Private | 8. |
| 3.Assumed | 6.Cash | 9.Unknown |

Validity **2 Related Parties**

| | | |
|---|---|---|
| 1.Valid | 4.Split | 7.Renovate |
| 2.Related | 5.Partial | 8.Other |
| 3.Distress | 6.Exempt | 9. |

Verified **1 Buyer**

| | | |
|---|---|---|
| 1.Buyer | 4.Agent | 7.Family |
| 2.Seller | 5.Pub Rec | 8.Other |
| 3.Lender | 6.MLS | 9. |

## Assessment Record

| Year | Land | Buildings | Exempt | Total |
|---|---|---|---|---|
| 2007 | 0 | 5,700 | 5,700 | 0 |
| 2008 | 0 | 5,700 | 5,700 | 0 |
| 2009 | 0 | 14,400 | 9,000 | 5,400 |
| 2012 | 0 | 14,400 | 8,800 | 5,600 |
| 2013 | 0 | 14,400 | 8,800 | 5,600 |
| 2015 | 0 | 14,400 | 9,000 | 5,400 |
| 2018 | 0 | 14,400 | 14,400 | 0 |
| 2019 | 0 | 6,700 | 6,700 | 0 |
| 2020 | 0 | 6,700 | 6,700 | 0 |

## Land Data

| Front Foot | Type | Effective Frontage | Effective Depth | Influence Factor | Influence Code |
|---|---|---|---|---|---|
| 11.Regular Lot | | | | % | |
| 12.Delta Triangle | | | | % | |
| 13.Nabla Triangle | | | | % | |
| 14.Rear Land | | | | % | |
| 15.Class I Road | | | | % | |
| | | | | % | |
| | | | | % | |
| **Square Foot** | | **Square Feet** | | | |
| 16.Class II Road | | | | % | |
| 17.Municipal Rese | | | | % | |
| 18.Munic Sep Lago | | | | % | |
| 19.Gravel Pit | | | | % | |
| 20.Industrial Bas | | | | % | |
| | | | | % | |
| | | | | % | |
| **Fract. Acre** | | **Acreage/Sites** | | | |
| 21.Developed Pave | | | | % | |
| 22.Undev Paved (F | | | | % | |
| 23.Developed Grav | | | | % | |
| **Acres** | | | | % | |
| 24.Undev Gravel ( | | | | % | |
| 25.Comm Base Pave | | | | % | |
| 26.Comm Base Grav | | | | % | |
| 27.Backlot | | | | % | |
| 28.Rear Land | | | | | |
| 29.Pavement | | | | | |

**Total Acreage** 0.00

### Influence Codes

1.Unimproved
2.Excess Frtg
3.Topography
4.Size/Shape
5.Access
6.Restriction
7.Open Space
8.View/Environ
9.Fract Share
**Acres**
30.Utility R O W
31.Tillable
32.Pasture
33.Orchard
34.Softwood F&O
35.Mixed Wood F&O
36.Hardwood F&O
37.Softwood TG
38.Mixed Wood TG
39.Hardwood TG
40.Wasteland
41.Open Space
42.Mobile Home Si
43.Condo Site
44.Lot Improvemen
45.Subdivision Lo
46.Heavy Ind Sit

**Washburn**

# Washburn

Map Lot 004-002A/ON | Account 886 | Location 181 GARDNER CREEK ROAD | Card 1 Of 1 | 11/18/2020

| | | |
|---|---|---|
| Building Style **0** | | |
| 1.Conv. | 5.Garrison | 9.Gambrel |
| 2.Ranch | 6.Salt Box | 10.Other |
| 3.R Ranch | 7.Contemp | 11.Split |
| 4.Cape | 8.Log | 12. |
| Dwelling Units **0** | | |
| Other Units **0** | | |
| Stories **0** | | |
| 1.1 | 4.1.5 | 7. |
| 2.2 | 5.1.75 | 8. |
| 3.3 | 6.2.5 | 9. |
| Exterior Walls **0** | | |
| 1.Wood | 5.Stucco | 9.T-111 |
| 2.Vin/Al | 6.Brick | 10.Other |
| 3.Compos. | 7.Stone | 11. |
| 4.Asbestos | 8.Concrete | 12. |
| Roof Surface **0** | | |
| 1.Asphalt | 4.Composit | 7. |
| 2.Slate | 5.Wood | 8. |
| 3.Metal | 6.Other | 9. |
| SF Masonry Trim **0** | | |
| OPEN-3-CUSTOM **0** | | |
| OPEN-4-CUSTOM **0** | | |
| Year Built **0** | | |
| Year Remodeled **0** | | |
| Foundation **0** | | |
| 1.Concrete | 4.Wood | 7. |
| 2.C Block | 5.Slab | 8. |
| 3.Br/Stone | 6.Piers | 9. |
| Basement **0** | | |
| 1.1/4 Bmt | 4.Full Bmt | 7. |
| 2.1/2 Bmt | 5.None | 8. |
| 3.3/4 Bmt | 6. | 9.None |
| Bsmt Gar # Cars **0** | | |
| Wet Basement **0** | | |
| 1.Dry | 4. | 7. |
| 2.Damp | 5. | 8. |
| 3.Wet | 6. | 9. |

| | | |
|---|---|---|
| SF Bsmt Living **0** | | |
| Fin Bsmt Grade **0 0** | | |
| OPEN 5 OPTIONAL **0** | | |
| Heat Type **100%** **0** | | |
| 1.HWBB | 5.FWA | 9.No Heat |
| 2.HWCI | 6.GravWA | 10. |
| 3.H Pump | 7.Electric | 11. |
| 4.Steam | 8.Fl/Wall | 12. |
| Cool Type **0%** **9 None** | | |
| 1.Refrig | 4.W&C Air | 7. |
| 2.Evapor | 5. | 8. |
| 3.H Pump | 6. | 9.None |
| Kitchen Style **0** | | |
| 1.Modern | 4.Obsolete | 7. |
| 2.Typical | 5. | 8. |
| 3.Old Type | 6. | 9.None |
| Bath(s) Style **0** | | |
| 1.Modern | 4.Obsolete | 7. |
| 2.Typical | 5. | 8. |
| 3.Old Type | 6. | 9.None |
| # Rooms **0** | | |
| # Bedrooms **0** | | |
| # Full Baths **0** | | |
| # Half Baths **0** | | |
| # Addn Fixtures **0** | | |
| # Fireplaces **0** | | |

TRIO Software
A Division of Harris Computer Systems

| | | |
|---|---|---|
| Layout **0** | | |
| 1.Typical | 4. | 7. |
| 2.Inadeq | 5. | 8. |
| 3.Poor | 6. | 9. |
| Attic **0** | | |
| 1.1/4 Fin | 4.Full Fin | 7. |
| 2.1/2 Fin | 5.Fl/Stair | 8. |
| 3.3/4 Fin | 6. | 9.None |
| Insulation **0** | | |
| 1.Full | 4.Minimal | 7. |
| 2.Heavy | 5.Partial | 8. |
| 3.Capped | 6. | 9.None |
| Unfinished % **0%** | | |
| Grade & Factor **0 0%** | | |
| 1.E Grade | 4.B Grade | 7. |
| 2.D Grade | 5.A Grade | 8.SC Grade |
| 3.C Grade | 6.AA Grade | 9.Same |
| SQFT (Footprint) **0** | | |
| Condition **0** | | |
| 1.Poor | 4.Avg | 7.V G |
| 2.Fair | 5.Avg+ | 8.Exc |
| 3.Avg- | 6.Good | 9.Same |
| Phys. % Good **0%** | | |
| Funct. % Good **100%** | | |
| Functional Code **9 None** | | |
| 1.Incomp | 4.Delap | 7.No Power |
| 2.O-Built | 5.Bsmt | 8.LongTerm |
| 3.Damage | 6.Common | 9.None |
| Econ. % Good **100%** | | |
| Economic Code **None** | | |
| 0.None | 3.No Power | 7. |
| 1.Location | 4.Generate | 8. |
| 2.Encroach | 9.None | 9. |
| Entrance Code **5 Estimated** | | |
| 1.Interior | 4.Vacant | 7. |
| 2.Refusal | 5.Estimate | 8. |
| 3.Informed | 6.Reviewed | 9. |
| Information Code **5 Estimate** | | |
| 1.Owner | 4.Agent | 7. |
| 2.Relative | 5.Estimate | 8. |
| 3.Tenant | 6.Other | 9. |

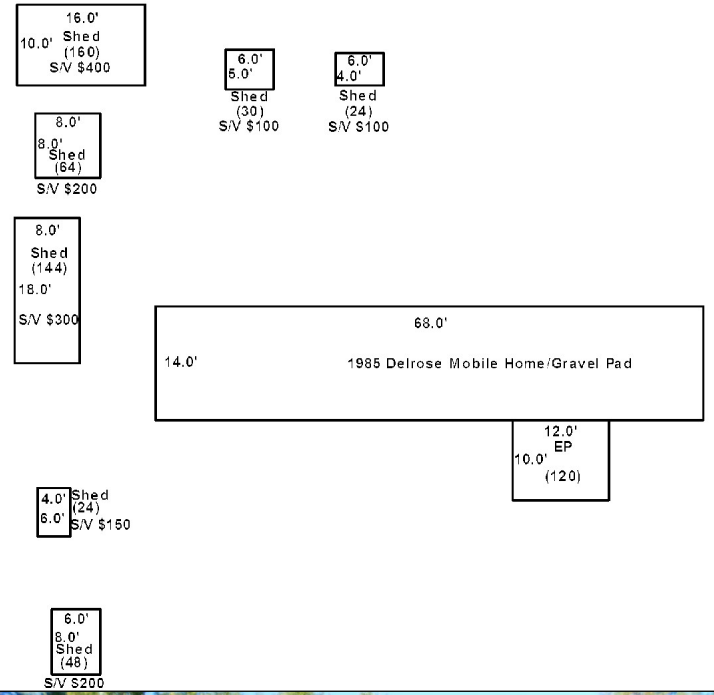


Date Inspected 8/31/2018

## Additions, Outbuildings & Improvements

| Type | Year | Units | Grade | Cond | Phys. | Funct. | Sound Value |
|---|---|---|---|---|---|---|---|
| 770 Derose M/H | 1985 | 14x68 | 4 100 | 2 | 0 % | 100 % | |
| 22 Encl Frame Porch | 1955 | 120 | 2 100 | 3 | 0 % | 100 % | |
| 24 Frame Shed | 0 | | | | % | % | 100 |
| 24 Frame Shed | 0 | | | | % | % | 100 |
| 24 Frame Shed | 0 | | | | % | % | 400 |
| 24 Frame Shed | 0 | | | | % | % | 200 |
| 24 Frame Shed | 0 | | | | % | % | 300 |
| 24 Frame Shed | 0 | | | | % | % | 150 |
| 24 Frame Shed | 0 | | | | % | % | 200 |
| | | | | | % | % | |

1.One Story Fram
2.Two Story Fram
3.Three Story Fr
4.1 & 1/2 Story
5.1 & 3/4 Story
6.2 & 1/2 Story
21.Open Frame Por
22.Encl Frame Por
23.Frame Garage
24.Frame Shed
25.Frame Bay Wind
26.1SFr Overhang
27.Unfin Basement
28.Unfinished Att
29.Finished Attic

Map Lot 004-003 | Account 1023 | Location GARDNER CREEK ROAD | Card 1 Of 1 | 11/18/2020

WHITE FARMS INC.

311 CROSS ROAD

WASHBURN ME 04786
B3761P101

## Property Data

Neighborhood **1 Neighborhood One**

Tree Growth Year **0**

1ST MORTGAGE **0**

2ND MORTGAGE **0**

Zone/Land Use **2 Commercial**

Secondary Zone

Topography **1 Level**

| | | |
|---|---|---|
| 1.Level | 4.Below St | 7.LevelBog |
| 2.Rolling | 5.Low | 8. |
| 3.Above St | 6.Swampy | 9. |

Utilities

| | | |
|---|---|---|
| 1.Public | 4.Dr Well | 7.Cesspool |
| 2.Water | 5.Dug Well | 8. |
| 3.Sewer | 6.Septic | 9.None |

Street **1 Paved**

| | | |
|---|---|---|
| 1.Paved | 4.Proposed | 7. |
| 2.Semi Imp | 5.R/O/W | 8. |
| 3.Gravel | 6. | 9.None |

TG PLAN YEAR **0**

Tif District # **0**

## Sale Data

Sale Date

Price

Sale Type **1 Land Only**

| | | |
|---|---|---|
| 1.Land | 4.Mobile | 7.C/I L&B |
| 2.L & B | 5.Other | 8. |
| 3.Building | 6.C/I Land | 9. |

Financing

| | | |
|---|---|---|
| 1.Convent | 4.Seller | 7. |
| 2.FHA/VA | 5.Private | 8. |
| 3.Assumed | 6.Cash | 9.Unknown |

Validity **1 Arms Length Sale**

| | | |
|---|---|---|
| 1.Valid | 4.Split | 7.Renovate |
| 2.Related | 5.Partial | 8.Other |
| 3.Distress | 6.Exempt | 9. |

Verified **5 Public Record**

| | | |
|---|---|---|
| 1.Buyer | 4.Agent | 7.Family |
| 2.Seller | 5.Pub Rec | 8.Other |
| 3.Lender | 6.MLS | 9. |

## Assessment Record

| Year | Land | Buildings | Exempt | Total |
|---|---|---|---|---|
| 2007 | 11,100 | 0 | 0 | 11,100 |
| 2008 | 11,100 | 0 | 0 | 11,100 |
| 2009 | 10,800 | 0 | 0 | 10,800 |
| 2012 | 10,800 | 0 | 0 | 10,800 |
| 2013 | 14,000 | 0 | 0 | 14,000 |
| 2015 | 14,000 | 0 | 0 | 14,000 |
| 2018 | 14,000 | 0 | 0 | 14,000 |
| 2019 | 29,500 | 0 | 0 | 29,500 |
| 2020 | 29,500 | 0 | 0 | 29,500 |

## Land Data

| Front Foot | Type | Effective Frontage | Effective Depth | Influence Factor | Influence Code |
|---|---|---|---|---|---|
| 11.Regular Lot | | | | % | |
| 12.Delta Triangle | | | | % | |
| 13.Nabla Triangle | | | | % | |
| 14.Rear Land | | | | % | |
| 15.Class I Road | | | | % | |
| | | | | % | |
| | | | | % | |
| **Square Foot** | | **Square Feet** | | | |
| 16.Class II Road | | | | % | |
| 17.Municipal Rese | | | | % | |
| 18.Munic Sep Lago | | | | % | |
| 19.Gravel Pit | | | | % | |
| 20.Industrial Bas | | | | % | |
| | | | | % | |
| | | | | % | |
| **Fract. Acre** | | **Acreage/Sites** | | | |
| 21.Developed Pave | 22 | 1.00 | 100 | % | 0 |
| 22.Undev Paved (F | 31 | 17.00 | 100 | % | 0 |
| 23.Developed Grav | 28 | 7.00 | 100 | % | 0 |
| **Acres** | | | | % | |
| 24.Undev Gravel ( | | | | % | |
| 25.Comm Base Pave | | | | % | |
| 26.Comm Base Grav | | | | % | |
| 27.Backlot | | | | % | |
| 28.Rear Land | | | | | |
| 29.Pavement | | | | | |

**Total Acreage** 25.00

### Influence Codes

1.Unimproved
2.Excess Frtg
3.Topography
4.Size/Shape
5.Access
6.Restriction
7.Open Space
8.View/Environ
9.Fract Share
**Acres**
30.Utility R O W
31.Tillable
32.Pasture
33.Orchard
34.Softwood F&O
35.Mixed Wood F&O
36.Hardwood F&O
37.Softwood TG
38.Mixed Wood TG
39.Hardwood TG
40.Wasteland
41.Open Space
42.Mobile Home Si
43.Condo Site
44.Lot Improvemen
45.Subdivision Lo
46.Heavy Ind Sit

Inspection Witnessed By:

X Date

| No./Date | Description | Date Insp. |
|---|---|---|
| | | |
| | | |
| | | |

Notes:

**Washburn**

# Washburn

Map Lot 004-003 | Account 1023 | Location GARDNER CREEK ROAD | Card 1 Of 1 | 11/18/2020

| | | |
|---|---|---|
| Building Style **0** | | |
| 1.Conv. | 5.Garrison | 9.Gambrel |
| 2.Ranch | 6.Salt Box | 10.Other |
| 3.R Ranch | 7.Contemp | 11.Split |
| 4.Cape | 8.Log | 12. |
| Dwelling Units **0** | | |
| Other Units **0** | | |
| Stories **0** | | |
| 1.1 | 4.1.5 | 7. |
| 2.2 | 5.1.75 | 8. |
| 3.3 | 6.2.5 | 9. |
| Exterior Walls **0** | | |
| 1.Wood | 5.Stucco | 9.T-111 |
| 2.Vin/Al | 6.Brick | 10.Other |
| 3.Compos. | 7.Stone | 11. |
| 4.Asbestos | 8.Concrete | 12. |
| Roof Surface **0** | | |
| 1.Asphalt | 4.Composit | 7. |
| 2.Slate | 5.Wood | 8. |
| 3.Metal | 6.Other | 9. |
| SF Masonry Trim **0** | | |
| OPEN-3-CUSTOM **0** | | |
| OPEN-4-CUSTOM **0** | | |
| Year Built **0** | | |
| Year Remodeled **0** | | |
| Foundation **0** | | |
| 1.Concrete | 4.Wood | 7. |
| 2.C Block | 5.Slab | 8. |
| 3.Br/Stone | 6.Piers | 9. |
| Basement **0** | | |
| 1.1/4 Bmt | 4.Full Bmt | 7. |
| 2.1/2 Bmt | 5.None | 8. |
| 3.3/4 Bmt | 6. | 9.None |
| Bsmt Gar # Cars **0** | | |
| Wet Basement **0** | | |
| 1.Dry | 4. | 7. |
| 2.Damp | 5. | 8. |
| 3.Wet | 6. | 9. |

| | | |
|---|---|---|
| SF Bsmt Living **0** | | |
| Fin Bsmt Grade **0 0** | | |
| OPEN 5 OPTIONAL **0** | | |
| Heat Type **100%** **0** | | |
| 1.HWBB | 5.FWA | 9.No Heat |
| 2.HWCI | 6.GravWA | 10. |
| 3.H Pump | 7.Electric | 11. |
| 4.Steam | 8.Fl/Wall | 12. |
| Cool Type **0%** **9 None** | | |
| 1.Refrig | 4.W&C Air | 7. |
| 2.Evapor | 5. | 8. |
| 3.H Pump | 6. | 9.None |
| Kitchen Style **0** | | |
| 1.Modern | 4.Obsolete | 7. |
| 2.Typical | 5. | 8. |
| 3.Old Type | 6. | 9.None |
| Bath(s) Style **0** | | |
| 1.Modern | 4.Obsolete | 7. |
| 2.Typical | 5. | 8. |
| 3.Old Type | 6. | 9.None |
| # Rooms **0** | | |
| # Bedrooms **0** | | |
| # Full Baths **0** | | |
| # Half Baths **0** | | |
| # Addn Fixtures **0** | | |
| # Fireplaces **0** | | |

TRIO Software
A Division of Harris Computer Systems

| | | |
|---|---|---|
| Layout **0** | | |
| 1.Typical | 4. | 7. |
| 2.Inadeq | 5. | 8. |
| 3.Poor | 6. | 9. |
| Attic **0** | | |
| 1.1/4 Fin | 4.Full Fin | 7. |
| 2.1/2 Fin | 5.Fl/Stair | 8. |
| 3.3/4 Fin | 6. | 9.None |
| Insulation **0** | | |
| 1.Full | 4.Minimal | 7. |
| 2.Heavy | 5.Partial | 8. |
| 3.Capped | 6. | 9.None |
| Unfinished % **0%** | | |
| Grade & Factor **0 0%** | | |
| 1.E Grade | 4.B Grade | 7. |
| 2.D Grade | 5.A Grade | 8.SC Grade |
| 3.C Grade | 6.AA Grade | 9.Same |
| SQFT (Footprint) **0** | | |
| Condition **0** | | |
| 1.Poor | 4.Avg | 7.V G |
| 2.Fair | 5.Avg+ | 8.Exc |
| 3.Avg- | 6.Good | 9.Same |
| Phys. % Good **0%** | | |
| Funct. % Good **100%** | | |
| Functional Code **9 None** | | |
| 1.Incomp | 4.Delap | 7.No Power |
| 2.O-Built | 5.Bsmt | 8.LongTerm |
| 3.Damage | 6.Common | 9.None |
| Econ. % Good **100%** | | |
| Economic Code **None** | | |
| 0.None | 3.No Power | 7. |
| 1.Location | 4.Generate | 8. |
| 2.Encroach | 9.None | 9. |
| Entrance Code **0** | | |
| 1.Interior | 4.Vacant | 7. |
| 2.Refusal | 5.Estimate | 8. |
| 3.Informed | 6.Reviewed | 9. |
| Information Code **0** | | |
| 1.Owner | 4.Agent | 7. |
| 2.Relative | 5.Estimate | 8. |
| 3.Tenant | 6.Other | 9. |

Date Inspected

## Additions, Outbuildings & Improvements

| Type | Year | Units | Grade | Cond | Phys. | Funct. | Sound Value |
|---|---|---|---|---|---|---|---|
| | | | | | % | % | |
| | | | | | % | % | |
| | | | | | % | % | |
| | | | | | % | % | |
| | | | | | % | % | |
| | | | | | % | % | |
| | | | | | % | % | |
| | | | | | % | % | |
| | | | | | % | % | |
| | | | | | % | % | |

1.One Story Fram
2.Two Story Fram
3.Three Story Fr
4.1 & 1/2 Story
5.1 & 3/4 Story
6.2 & 1/2 Story
21.Open Frame Por
22.Encl Frame Por
23.Frame Garage
24.Frame Shed
25.Frame Bay Wind
26.1SFr Overhang
27.Unfin Basement
28.Unfinished Att
29.Finished Attic

Map Lot 004-003A | Account 398 | Location 111 GARDNER CREEK ROAD | Card 1 Of 1 | 11/18/2020

DROST, KENNETH W.

1229 OAKLAND AVENUE

WARNER ROBBINS GA 31088
B3759P142

## Property Data

Neighborhood **1 Neighborhood One**

Tree Growth Year **0**

1ST MORTGAGE **0**

2ND MORTGAGE **0**

Zone/Land Use **1 Residential**

Secondary Zone

Topography **1 Level**

| | | |
|---|---|---|
| 1.Level | 4.Below St | 7.LevelBog |
| 2.Rolling | 5.Low | 8. |
| 3.Above St | 6.Swampy | 9. |

Utilities

| | | |
|---|---|---|
| 1.Public | 4.Dr Well | 7.Cesspool |
| 2.Water | 5.Dug Well | 8. |
| 3.Sewer | 6.Septic | 9.None |

Street **1 Paved**

| | | |
|---|---|---|
| 1.Paved | 4.Proposed | 7. |
| 2.Semi Imp | 5.R/O/W | 8. |
| 3.Gravel | 6. | 9.None |

TG PLAN YEAR **0**

Tif District # **0**

## Sale Data

Sale Date **1/27/2003**

Price

Sale Type **1 Land Only**

| | | |
|---|---|---|
| 1.Land | 4.Mobile | 7.C/I L&B |
| 2.L & B | 5.Other | 8. |
| 3.Building | 6.C/I Land | 9. |

Financing

| | | |
|---|---|---|
| 1.Convent | 4.Seller | 7. |
| 2.FHA/VA | 5.Private | 8. |
| 3.Assumed | 6.Cash | 9.Unknown |

Validity **2 Related Parties**

| | | |
|---|---|---|
| 1.Valid | 4.Split | 7.Renovate |
| 2.Related | 5.Partial | 8.Other |
| 3.Distress | 6.Exempt | 9. |

Verified **5 Public Record**

| | | |
|---|---|---|
| 1.Buyer | 4.Agent | 7.Family |
| 2.Seller | 5.Pub Rec | 8.Other |
| 3.Lender | 6.MLS | 9. |

## Assessment Record

| Year | Land | Buildings | Exempt | Total |
|---|---|---|---|---|
| 2007 | 16,300 | 0 | 0 | 16,300 |
| 2008 | 16,300 | 0 | 0 | 16,300 |
| 2009 | 16,300 | 0 | 0 | 16,300 |
| 2012 | 16,300 | 0 | 0 | 16,300 |
| 2013 | 21,100 | 0 | 0 | 21,100 |
| 2015 | 21,100 | 0 | 0 | 21,100 |
| 2018 | 21,100 | 0 | 0 | 21,100 |
| 2019 | 35,000 | 0 | 0 | 35,000 |
| 2020 | 35,000 | 0 | 0 | 35,000 |

## Land Data

| Front Foot | Type | Effective Frontage | Effective Depth | Influence Factor | Influence Code |
|---|---|---|---|---|---|
| 11.Regular Lot | | | | % | |
| 12.Delta Triangle | | | | % | |
| 13.Nabla Triangle | | | | % | |
| 14.Rear Land | | | | % | |
| 15.Class I Road | | | | % | |
| | | | | % | |
| | | | | % | |
| **Square Foot** | | **Square Feet** | | | |
| 16.Class II Road | | | | % | |
| 17.Municipal Rese | | | | % | |
| 18.Munic Sep Lago | | | | % | |
| 19.Gravel Pit | | | | % | |
| 20.Industrial Bas | | | | % | |
| | | | | % | |
| | | | | % | |
| **Fract. Acre** | | **Acreage/Sites** | | | |
| 21.Developed Pave | 22 | 1.00 | 100 | % | 0 |
| 22.Undev Paved (F | 31 | 26.00 | 100 | % | 0 |
| 23.Developed Grav | | | | % | |
| **Acres** | | | | % | |
| 24.Undev Gravel ( | | | | % | |
| 25.Comm Base Pave | | | | % | |
| 26.Comm Base Grav | | | | % | |
| 27.Backlot | | | | % | |
| 28.Rear Land | | | | % | |
| 29.Pavement | | | | % | |

**Total Acreage** 27.00

### Influence Codes

1.Unimproved
2.Excess Frtg
3.Topography
4.Size/Shape
5.Access
6.Restriction
7.Open Space
8.View/Environ
9.Fract Share
**Acres**
30.Utility R O W
31.Tillable
32.Pasture
33.Orchard
34.Softwood F&O
35.Mixed Wood F&O
36.Hardwood F&O
37.Softwood TG
38.Mixed Wood TG
39.Hardwood TG
40.Wasteland
41.Open Space
42.Mobile Home Si
43.Condo Site
44.Lot Improvemen
45.Subdivision Lo
46.Heavy Ind Sit

Inspection Witnessed By:

X Date

| No./Date | Description | Date Insp. |
|---|---|---|
| | | |
| | | |
| | | |

Notes:

**Washburn**

# Washburn

Map Lot 004-003A | Account 398 | Location 111 GARDNER CREEK ROAD | Card 1 Of 1 | 11/18/2020

| | | |
|---|---|---|
| Building Style **0** | | |
| 1.Conv. | 5.Garrison | 9.Gambrel |
| 2.Ranch | 6.Salt Box | 10.Other |
| 3.R Ranch | 7.Contemp | 11.Split |
| 4.Cape | 8.Log | 12. |
| Dwelling Units **0** | | |
| Other Units **0** | | |
| Stories **0** | | |
| 1.1 | 4.1.5 | 7. |
| 2.2 | 5.1.75 | 8. |
| 3.3 | 6.2.5 | 9. |
| Exterior Walls **0** | | |
| 1.Wood | 5.Stucco | 9.T-111 |
| 2.Vin/Al | 6.Brick | 10.Other |
| 3.Compos. | 7.Stone | 11. |
| 4.Asbestos | 8.Concrete | 12. |
| Roof Surface **0** | | |
| 1.Asphalt | 4.Composit | 7. |
| 2.Slate | 5.Wood | 8. |
| 3.Metal | 6.Other | 9. |
| SF Masonry Trim **0** | | |
| OPEN-3-CUSTOM **0** | | |
| OPEN-4-CUSTOM **0** | | |
| Year Built **0** | | |
| Year Remodeled **0** | | |
| Foundation **0** | | |
| 1.Concrete | 4.Wood | 7. |
| 2.C Block | 5.Slab | 8. |
| 3.Br/Stone | 6.Piers | 9. |
| Basement **0** | | |
| 1.1/4 Bmt | 4.Full Bmt | 7. |
| 2.1/2 Bmt | 5.None | 8. |
| 3.3/4 Bmt | 6. | 9.None |
| Bsmt Gar # Cars **0** | | |
| Wet Basement **0** | | |
| 1.Dry | 4. | 7. |
| 2.Damp | 5. | 8. |
| 3.Wet | 6. | 9. |

| | | |
|---|---|---|
| SF Bsmt Living **0** | | |
| Fin Bsmt Grade **0 0** | | |
| OPEN 5 OPTIONAL **0** | | |
| Heat Type **100%** **0** | | |
| 1.HWBB | 5.FWA | 9.No Heat |
| 2.HWCI | 6.GravWA | 10. |
| 3.H Pump | 7.Electric | 11. |
| 4.Steam | 8.Fl/Wall | 12. |
| Cool Type **0%** **9 None** | | |
| 1.Refrig | 4.W&C Air | 7. |
| 2.Evapor | 5. | 8. |
| 3.H Pump | 6. | 9.None |
| Kitchen Style **0** | | |
| 1.Modern | 4.Obsolete | 7. |
| 2.Typical | 5. | 8. |
| 3.Old Type | 6. | 9.None |
| Bath(s) Style **0** | | |
| 1.Modern | 4.Obsolete | 7. |
| 2.Typical | 5. | 8. |
| 3.Old Type | 6. | 9.None |
| # Rooms **0** | | |
| # Bedrooms **0** | | |
| # Full Baths **0** | | |
| # Half Baths **0** | | |
| # Addn Fixtures **0** | | |
| # Fireplaces **0** | | |

TRIO Software
A Division of Harris Computer Systems

| | | |
|---|---|---|
| Layout **0** | | |
| 1.Typical | 4. | 7. |
| 2.Inadeq | 5. | 8. |
| 3.Poor | 6. | 9. |
| Attic **0** | | |
| 1.1/4 Fin | 4.Full Fin | 7. |
| 2.1/2 Fin | 5.Fl/Stair | 8. |
| 3.3/4 Fin | 6. | 9.None |
| Insulation **0** | | |
| 1.Full | 4.Minimal | 7. |
| 2.Heavy | 5.Partial | 8. |
| 3.Capped | 6. | 9.None |
| Unfinished % **0%** | | |
| Grade & Factor **0 0%** | | |
| 1.E Grade | 4.B Grade | 7. |
| 2.D Grade | 5.A Grade | 8.SC Grade |
| 3.C Grade | 6.AA Grade | 9.Same |
| SQFT (Footprint) **0** | | |
| Condition **0** | | |
| 1.Poor | 4.Avg | 7.V G |
| 2.Fair | 5.Avg+ | 8.Exc |
| 3.Avg- | 6.Good | 9.Same |
| Phys. % Good **0%** | | |
| Funct. % Good **100%** | | |
| Functional Code **9 None** | | |
| 1.Incomp | 4.Delap | 7.No Power |
| 2.O-Built | 5.Bsmt | 8.LongTerm |
| 3.Damage | 6.Common | 9.None |
| Econ. % Good **100%** | | |
| Economic Code **None** | | |
| 0.None | 3.No Power | 7. |
| 1.Location | 4.Generate | 8. |
| 2.Encroach | 9.None | 9. |
| Entrance Code **0** | | |
| 1.Interior | 4.Vacant | 7. |
| 2.Refusal | 5.Estimate | 8. |
| 3.Informed | 6.Reviewed | 9. |
| Information Code **0** | | |
| 1.Owner | 4.Agent | 7. |
| 2.Relative | 5.Estimate | 8. |
| 3.Tenant | 6.Other | 9. |

Date Inspected

## Additions, Outbuildings & Improvements

| Type | Year | Units | Grade | Cond | Phys. | Funct. | Sound Value |
|---|---|---|---|---|---|---|---|
| | | | | | % | % | |
| | | | | | % | % | |
| | | | | | % | % | |
| | | | | | % | % | |
| | | | | | % | % | |
| | | | | | % | % | |
| | | | | | % | % | |
| | | | | | % | % | |
| | | | | | % | % | |
| | | | | | % | % | |

1.One Story Fram
2.Two Story Fram
3.Three Story Fr
4.1 & 1/2 Story
5.1 & 3/4 Story
6.2 & 1/2 Story
21.Open Frame Por
22.Encl Frame Por
23.Frame Garage
24.Frame Shed
25.Frame Bay Wind
26.1SFr Overhang
27.Unfin Basement
28.Unfinished Att
29.Finished Attic

Map Lot 004-004 Account 112 Location GARDNER CREEK ROAD Card 1 Of 1 11/18/2020

CHANDLER FAMILY LLC

1634 STATE ROAD

MAPLETON ME 04757
B3741P20

## Property Data

Neighborhood **1 Neighborhood One**

Tree Growth Year **0**

1ST MORTGAGE **0**

2ND MORTGAGE **0**

Zone/Land Use **1 Residential**

Secondary Zone

Topography **1 Level**

| | | |
|---|---|---|
| 1.Level | 4.Below St | 7.LevelBog |
| 2.Rolling | 5.Low | 8. |
| 3.Above St | 6.Swampy | 9. |

Utilities **9 None**

| | | |
|---|---|---|
| 1.Public | 4.Dr Well | 7.Cesspool |
| 2.Water | 5.Dug Well | 8. |
| 3.Sewer | 6.Septic | 9.None |

Street **1 Paved**

| | | |
|---|---|---|
| 1.Paved | 4.Proposed | 7. |
| 2.Semi Imp | 5.R/O/W | 8. |
| 3.Gravel | 6. | 9.None |

TG PLAN YEAR **0**

Tif District # **0**

## Sale Data

Sale Date **12/03/2002**

Price

Sale Type **1 Land Only**

| | | |
|---|---|---|
| 1.Land | 4.Mobile | 7.C/I L&B |
| 2.L & B | 5.Other | 8. |
| 3.Building | 6.C/I Land | 9. |

Financing

| | | |
|---|---|---|
| 1.Convent | 4.Seller | 7. |
| 2.FHA/VA | 5.Private | 8. |
| 3.Assumed | 6.Cash | 9.Unknown |

Validity **1 Arms Length Sale**

| | | |
|---|---|---|
| 1.Valid | 4.Split | 7.Renovate |
| 2.Related | 5.Partial | 8.Other |
| 3.Distress | 6.Exempt | 9. |

Verified **5 Public Record**

| | | |
|---|---|---|
| 1.Buyer | 4.Agent | 7.Family |
| 2.Seller | 5.Pub Rec | 8.Other |
| 3.Lender | 6.MLS | 9. |

## Assessment Record

| Year | Land | Buildings | Exempt | Total |
|---|---|---|---|---|
| 2007 | 30,700 | 0 | 0 | 30,700 |
| 2008 | 30,700 | 0 | 0 | 30,700 |
| 2009 | 30,700 | 0 | 0 | 30,700 |
| 2012 | 30,700 | 0 | 0 | 30,700 |
| 2013 | 39,800 | 0 | 0 | 39,800 |
| 2015 | 39,800 | 0 | 0 | 39,800 |
| 2018 | 39,800 | 0 | 0 | 39,800 |
| 2019 | 84,000 | 400 | 0 | 84,400 |
| 2020 | 84,000 | 400 | 0 | 84,400 |

## Land Data

| Front Foot | Type | Effective Frontage | Effective Depth | Influence Factor | Influence Code |
|---|---|---|---|---|---|
| 11.Regular Lot | | | | % | |
| 12.Delta Triangle | | | | % | |
| 13.Nabla Triangle | | | | % | |
| 14.Rear Land | | | | % | |
| 15.Class I Road | | | | % | |
| | | | | % | |
| | | | | % | |
| **Square Foot** | | **Square Feet** | | | |
| 16.Class II Road | | | | % | |
| 17.Municipal Rese | | | | % | |
| 18.Munic Sep Lago | | | | % | |
| 19.Gravel Pit | | | | % | |
| 20.Industrial Bas | | | | % | |
| | | | | % | |
| | | | | % | |
| **Fract. Acre** | | **Acreage/Sites** | | | |
| 21.Developed Pave | 31 | 71.00 | | 100 % | 0 |
| 22.Undev Paved (F | 28 | 8.00 | | 100 % | 0 |
| 23.Developed Grav | 22 | 1.00 | | 100 % | 0 |
| **Acres** | | | | % | |
| 24.Undev Gravel ( | | | | % | |
| 25.Comm Base Pave | | | | % | |
| 26.Comm Base Grav | | | | % | |
| 27.Backlot | | | | % | |
| 28.Rear Land | | | | | |
| 29.Pavement | | | | | |

**Total Acreage** 80.00

### Influence Codes

1.Unimproved
2.Excess Frtg
3.Topography
4.Size/Shape
5.Access
6.Restriction
7.Open Space
8.View/Environ
9.Fract Share
**Acres**
30.Utility R O W
31.Tillable
32.Pasture
33.Orchard
34.Softwood F&O
35.Mixed Wood F&O
36.Hardwood F&O
37.Softwood TG
38.Mixed Wood TG
39.Hardwood TG
40.Wasteland
41.Open Space
42.Mobile Home Si
43.Condo Site
44.Lot Improvemen
45.Subdivision Lo
46.Heavy Ind Sit

Inspection Witnessed By:

X Date

| No./Date | Description | Date Insp. |
|---|---|---|
| | | |
| | | |
| | | |

Notes:

**Washburn**

**Washburn**

Map Lot 004-004 | Account 112 | Location GARDNER CREEK ROAD | Card 1 Of 1 | 11/18/2020

| | | |
|---|---|---|
| Building Style **0** | | |
| 1.Conv. | 5.Garrison | 9.Gambrel |
| 2.Ranch | 6.Salt Box | 10.Other |
| 3.R Ranch | 7.Contemp | 11.Split |
| 4.Cape | 8.Log | 12. |
| Dwelling Units **0** | | |
| Other Units **0** | | |
| Stories **0** | | |
| 1.1 | 4.1.5 | 7. |
| 2.2 | 5.1.75 | 8. |
| 3.3 | 6.2.5 | 9. |
| Exterior Walls **0** | | |
| 1.Wood | 5.Stucco | 9.T-111 |
| 2.Vin/Al | 6.Brick | 10.Other |
| 3.Compos. | 7.Stone | 11. |
| 4.Asbestos | 8.Concrete | 12. |
| Roof Surface **0** | | |
| 1.Asphalt | 4.Composit | 7. |
| 2.Slate | 5.Wood | 8. |
| 3.Metal | 6.Other | 9. |
| SF Masonry Trim **0** | | |
| OPEN-3-CUSTOM **0** | | |
| OPEN-4-CUSTOM **0** | | |
| Year Built **0** | | |
| Year Remodeled **0** | | |
| Foundation **0** | | |
| 1.Concrete | 4.Wood | 7. |
| 2.C Block | 5.Slab | 8. |
| 3.Br/Stone | 6.Piers | 9. |
| Basement **0** | | |
| 1.1/4 Bmt | 4.Full Bmt | 7. |
| 2.1/2 Bmt | 5.None | 8. |
| 3.3/4 Bmt | 6. | 9.None |
| Bsmt Gar # Cars **0** | | |
| Wet Basement **0** | | |
| 1.Dry | 4. | 7. |
| 2.Damp | 5. | 8. |
| 3.Wet | 6. | 9. |

| | | |
|---|---|---|
| SF Bsmt Living **0** | | |
| Fin Bsmt Grade **0 0** | | |
| OPEN 5 OPTIONAL **0** | | |
| Heat Type **100%** **0** | | |
| 1.HWBB | 5.FWA | 9.No Heat |
| 2.HWCI | 6.GravWA | 10. |
| 3.H Pump | 7.Electric | 11. |
| 4.Steam | 8.Fl/Wall | 12. |
| Cool Type **0%** **9 None** | | |
| 1.Refrig | 4.W&C Air | 7. |
| 2.Evapor | 5. | 8. |
| 3.H Pump | 6. | 9.None |
| Kitchen Style **0** | | |
| 1.Modern | 4.Obsolete | 7. |
| 2.Typical | 5. | 8. |
| 3.Old Type | 6. | 9.None |
| Bath(s) Style **0** | | |
| 1.Modern | 4.Obsolete | 7. |
| 2.Typical | 5. | 8. |
| 3.Old Type | 6. | 9.None |
| # Rooms **0** | | |
| # Bedrooms **0** | | |
| # Full Baths **0** | | |
| # Half Baths **0** | | |
| # Addn Fixtures **0** | | |
| # Fireplaces **0** | | |

TRIO Software
A Division of Harris Computer Systems

| | | |
|---|---|---|
| Layout **0** | | |
| 1.Typical | 4. | 7. |
| 2.Inadeq | 5. | 8. |
| 3.Poor | 6. | 9. |
| Attic **0** | | |
| 1.1/4 Fin | 4.Full Fin | 7. |
| 2.1/2 Fin | 5.Fl/Stair | 8. |
| 3.3/4 Fin | 6. | 9.None |
| Insulation **0** | | |
| 1.Full | 4.Minimal | 7. |
| 2.Heavy | 5.Partial | 8. |
| 3.Capped | 6. | 9.None |
| Unfinished % **0%** | | |
| Grade & Factor **0 0%** | | |
| 1.E Grade | 4.B Grade | 7. |
| 2.D Grade | 5.A Grade | 8.SC Grade |
| 3.C Grade | 6.AA Grade | 9.Same |
| SQFT (Footprint) **0** | | |
| Condition **0** | | |
| 1.Poor | 4.Avg | 7.V G |
| 2.Fair | 5.Avg+ | 8.Exc |
| 3.Avg- | 6.Good | 9.Same |
| Phys. % Good **0%** | | |
| Funct. % Good **100%** | | |
| Functional Code **9 None** | | |
| 1.Incomp | 4.Delap | 7.No Power |
| 2.O-Built | 5.Bsmt | 8.LongTerm |
| 3.Damage | 6.Common | 9.None |
| Econ. % Good **100%** | | |
| Economic Code **None** | | |
| 0.None | 3.No Power | 7. |
| 1.Location | 4.Generate | 8. |
| 2.Encroach | 9.None | 9. |
| Entrance Code **5 Estimated** | | |
| 1.Interior | 4.Vacant | 7. |
| 2.Refusal | 5.Estimate | 8. |
| 3.Informed | 6.Reviewed | 9. |
| Information Code **5 Estimate** | | |
| 1.Owner | 4.Agent | 7. |
| 2.Relative | 5.Estimate | 8. |
| 3.Tenant | 6.Other | 9. |

20.0'

Shed

14.0' (280)

S/V 400

Date Inspected 9/01/2018

**Additions, Outbuildings & Improvements**

| Type | Year | Units | Grade | Cond | Phys. | Funct. | Sound Value |
|---|---|---|---|---|---|---|---|
| 24 Frame Shed | 0 | | | | % | % | 400 |
| | | | | | % | % | |
| | | | | | % | % | |
| | | | | | % | % | |
| | | | | | % | % | |
| | | | | | % | % | |
| | | | | | % | % | |
| | | | | | % | % | |
| | | | | | % | % | |
| | | | | | % | % | |

1.One Story Fram
2.Two Story Fram
3.Three Story Fr
4.1 & 1/2 Story
5.1 & 3/4 Story
6.2 & 1/2 Story
21.Open Frame Por
22.Encl Frame Por
23.Frame Garage
24.Frame Shed
25.Frame Bay Wind
26.1SFr Overhang
27.Unfin Basement
28.Unfinished Att
29.Finished Attic

Map Lot 004-004A | Account 189 | Location 101 GARDNER CREEK ROAD | Card 1 Of 1 | 11/18/2020

VIOLETTE, VICKY J.

101 GARDNER CREEK ROAD

WASHBURN ME 04786
B5133P280 B5133P282

Previous Owner
Headley, Kristin C.
110 Shadow Hill Road

North Sutton NH 03260
Sale Date: 12/07/2012

Inspection Witnessed By:

X Date

| No./Date | Description | Date Insp. |
|---|---|---|
| | | |
| | | |
| | | |

Notes:
*Garage -20% for attached during reval.

**Washburn**

## Property Data

| | |
|---|---|
| Neighborhood | **1 Neighborhood One** |
| Tree Growth Year | **0** |
| 1ST MORTGAGE | **0** |
| 2ND MORTGAGE | **0** |
| Zone/Land Use | **1 Residential** |
| Secondary Zone | |
| Topography | **3 Above Street** |

| | | |
|---|---|---|
| 1.Level | 4.Below St | 7.LevelBog |
| 2.Rolling | 5.Low | 8. |
| 3.Above St | 6.Swampy | 9. |

Utilities **4 Drilled Well** **6 Septic System**

| | | |
|---|---|---|
| 1.Public | 4.Dr Well | 7.Cesspool |
| 2.Water | 5.Dug Well | 8. |
| 3.Sewer | 6.Septic | 9.None |

Street **1 Paved**

| | | |
|---|---|---|
| 1.Paved | 4.Proposed | 7. |
| 2.Semi Imp | 5.R/O/W | 8. |
| 3.Gravel | 6. | 9.None |

| | |
|---|---|
| TG PLAN YEAR | **0** |
| Tif District # | **0** |

## Sale Data

| | |
|---|---|
| Sale Date | **12/11/2012** |
| Price | **54,000** |
| Sale Type | **2 Land & Buildings** |

| | | |
|---|---|---|
| 1.Land | 4.Mobile | 7.C/I L&B |
| 2.L & B | 5.Other | 8. |
| 3.Building | 6.C/I Land | 9. |

Financing **1 Conventional**

| | | |
|---|---|---|
| 1.Convent | 4.Seller | 7. |
| 2.FHA/VA | 5.Private | 8. |
| 3.Assumed | 6.Cash | 9.Unknown |

Validity **1 Arms Length Sale**

| | | |
|---|---|---|
| 1.Valid | 4.Split | 7.Renovate |
| 2.Related | 5.Partial | 8.Other |
| 3.Distress | 6.Exempt | 9. |

Verified **5 Public Record**

| | | |
|---|---|---|
| 1.Buyer | 4.Agent | 7.Family |
| 2.Seller | 5.Pub Rec | 8.Other |
| 3.Lender | 6.MLS | 9. |

## Assessment Record

| Year | Land | Buildings | Exempt | Total |
|---|---|---|---|---|
| 2007 | 6,400 | 32,000 | 13,000 | 25,400 |
| 2008 | 6,400 | 32,000 | 13,000 | 25,400 |
| 2009 | 6,400 | 32,000 | 9,000 | 29,400 |
| 2012 | 6,400 | 32,000 | 0 | 38,400 |
| 2013 | 8,300 | 32,000 | 0 | 40,300 |
| 2015 | 8,300 | 32,000 | 0 | 40,300 |
| 2018 | 8,300 | 35,800 | 0 | 44,100 |
| 2019 | 17,000 | 55,400 | 0 | 72,400 |
| 2020 | 17,000 | 55,200 | 0 | 72,200 |

## Land Data

| Front Foot | Type | Effective Frontage | Effective Depth | Influence Factor | Influence Code |
|---|---|---|---|---|---|
| 11.Regular Lot | | | | % | |
| 12.Delta Triangle | | | | % | |
| 13.Nabla Triangle | | | | % | |
| 14.Rear Land | | | | % | |
| 15.Class I Road | | | | % | |
| | | | | % | |
| | | | | % | |
| **Square Foot** | | **Square Feet** | | | |
| 16.Class II Road | | | | % | |
| 17.Municipal Rese | | | | % | |
| 18.Munic Sep Lago | | | | % | |
| 19.Gravel Pit | | | | % | |
| 20.Industrial Bas | | | | % | |
| | | | | % | |
| | | | | % | |
| **Fract. Acre** | | **Acreage/Sites** | | | |
| 21.Developed Pave | 21 | 1.00 | 100 | % | 0 |
| 22.Undev Paved (F | 28 | 1.00 | 100 | % | 0 |
| 23.Developed Grav | | | | % | |
| **Acres** | | | | % | |
| 24.Undev Gravel ( | | | | % | |
| 25.Comm Base Pave | | | | % | |
| 26.Comm Base Grav | | | | % | |
| 27.Backlot | | | | % | |
| 28.Rear Land | | | | % | |
| 29.Pavement | | | | % | |

**Total Acreage** 2.00

### Influence Codes

1.Unimproved
2.Excess Frtg
3.Topography
4.Size/Shape
5.Access
6.Restriction
7.Open Space
8.View/Environ
9.Fract Share
**Acres**
30.Utility R O W
31.Tillable
32.Pasture
33.Orchard
34.Softwood F&O
35.Mixed Wood F&O
36.Hardwood F&O
37.Softwood TG
38.Mixed Wood TG
39.Hardwood TG
40.Wasteland
41.Open Space
42.Mobile Home Si
43.Condo Site
44.Lot Improvemen
45.Subdivision Lo
46.Heavy Ind Sit

# Washburn

Map Lot 004-004A | Account 189 | Location 101 GARDNER CREEK ROAD | Card 1 Of 1 | 11/18/2020

| | | | |
|---|---|---|---|
| Building Style | **1 Conventional** | | |
| 1.Conv. | 5.Garrison | 9.Gambrel | |
| 2.Ranch | 6.Salt Box | 10.Other | |
| 3.R Ranch | 7.Contemp | 11.Split | |
| 4.Cape | 8.Log | 12. | |
| Dwelling Units | **1** | | |
| Other Units | **0** | | |
| Stories | **4 One & 1/2 Story** | | |
| 1.1 | 4.1.5 | 7. | |
| 2.2 | 5.1.75 | 8. | |
| 3.3 | 6.2.5 | 9. | |
| Exterior Walls | **2 Vinyl/Aluminum** | | |
| 1.Wood | 5.Stucco | 9.T-111 | |
| 2.Vin/Al | 6.Brick | 10.Other | |
| 3.Compos. | 7.Stone | 11. | |
| 4.Asbestos | 8.Concrete | 12. | |
| Roof Surface | **1 Asphalt Shingles** | | |
| 1.Asphalt | 4.Composit | 7. | |
| 2.Slate | 5.Wood | 8. | |
| 3.Metal | 6.Other | 9. | |
| SF Masonry Trim | **0** | | |
| OPEN-3-CUSTOM | **0** | | |
| OPEN-4-CUSTOM | **0** | | |
| Year Built | **1900** | | |
| Year Remodeled | **0** | | |
| Foundation | **1 Concrete** | | |
| 1.Concrete | 4.Wood | 7. | |
| 2.C Block | 5.Slab | 8. | |
| 3.Br/Stone | 6.Piers | 9. | |
| Basement | **4 Full Basement** | | |
| 1.1/4 Bmt | 4.Full Bmt | 7. | |
| 2.1/2 Bmt | 5.None | 8. | |
| 3.3/4 Bmt | 6. | 9.None | |
| Bsmt Gar # Cars | **0** | | |
| Wet Basement | **1 Dry Basement** | | |
| 1.Dry | 4. | 7. | |
| 2.Damp | 5. | 8. | |
| 3.Wet | 6. | 9. | |

| | | | |
|---|---|---|---|
| SF Bsmt Living | **0** | | |
| Fin Bsmt Grade | **0 0** | | |
| OPEN 5 OPTIONAL | **0** | | |
| Heat Type | **100%** | **5 Forced Warm Air** | |
| 1.HWBB | 5.FWA | 9.No Heat | |
| 2.HWCI | 6.GravWA | 10. | |
| 3.H Pump | 7.Electric | 11. | |
| 4.Steam | 8.Fl/Wall | 12. | |
| Cool Type | **100%** | **3 Heat Pump** | |
| 1.Refrig | 4.W&C Air | 7. | |
| 2.Evapor | 5. | 8. | |
| 3.H Pump | 6. | 9.None | |
| Kitchen Style | **2 Typical** | | |
| 1.Modern | 4.Obsolete | 7. | |
| 2.Typical | 5. | 8. | |
| 3.Old Type | 6. | 9.None | |
| Bath(s) Style | **2 Typical Bath(s)** | | |
| 1.Modern | 4.Obsolete | 7. | |
| 2.Typical | 5. | 8. | |
| 3.Old Type | 6. | 9.None | |
| # Rooms | **5** | | |
| # Bedrooms | **2** | | |
| # Full Baths | **1** | | |
| # Half Baths | **1** | | |
| # Addn Fixtures | **0** | | |
| # Fireplaces | **0** | | |

TRIO Software
A Division of Harris Computer Systems

| | | | |
|---|---|---|---|
| Layout | **1 Typical** | | |
| 1.Typical | 4. | 7. | |
| 2.Inadeq | 5. | 8. | |
| 3.Poor | 6. | 9. | |
| Attic | **9 None** | | |
| 1.1/4 Fin | 4.Full Fin | 7. | |
| 2.1/2 Fin | 5.Fl/Stair | 8. | |
| 3.3/4 Fin | 6. | 9.None | |
| Insulation | **4 Minimal** | | |
| 1.Full | 4.Minimal | 7. | |
| 2.Heavy | 5.Partial | 8. | |
| 3.Capped | 6. | 9.None | |
| Unfinished % | **0%** | | |
| Grade & Factor | **2 Fair 110%** | | |
| 1.E Grade | 4.B Grade | 7. | |
| 2.D Grade | 5.A Grade | 8.SC Grade | |
| 3.C Grade | 6.AA Grade | 9.Same | |
| SQFT (Footprint) | **494** | | |
| Condition | **4 Average** | | |
| 1.Poor | 4.Avg | 7.V G | |
| 2.Fair | 5.Avg+ | 8.Exc | |
| 3.Avg- | 6.Good | 9.Same | |
| Phys. % Good | **0%** | | |
| Funct. % Good | **100%** | | |
| Functional Code | **9 None** | | |
| 1.Incomp | 4.Delap | 7.No Power | |
| 2.O-Built | 5.Bsmt | 8.LongTerm | |
| 3.Damage | 6.Common | 9.None | |
| Econ. % Good | **100%** | | |
| Economic Code | **None** | | |
| 0.None | 3.No Power | 7. | |
| 1.Location | 4.Generate | 8. | |
| 2.Encroach | 9.None | 9. | |
| Entrance Code | **3 Information Only** | | |
| 1.Interior | 4.Vacant | 7. | |
| 2.Refusal | 5.Estimate | 8. | |
| 3.Informed | 6.Reviewed | 9. | |
| Information Code | **1 Owner** | | |
| 1.Owner | 4.Agent | 7. | |
| 2.Relative | 5.Estimate | 8. | |
| 3.Tenant | 6.Other | 9. | |

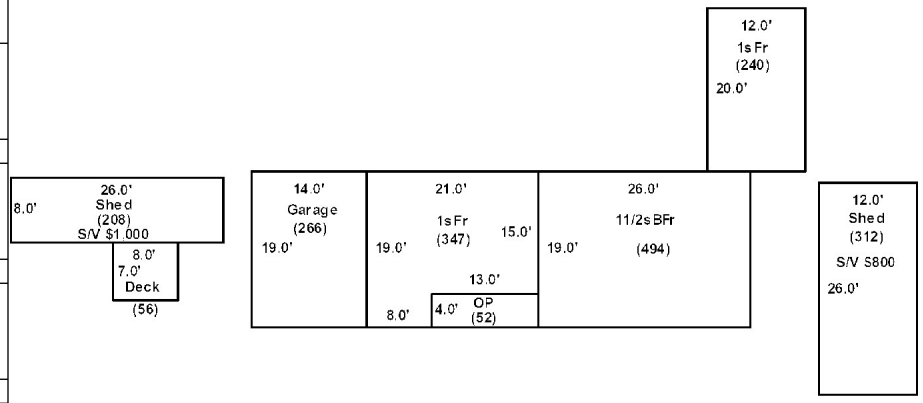


Date Inspected 8/31/2018

## Additions, Outbuildings & Improvements

| Type | Year | Units | Grade | Cond | Phys. | Funct. | Sound Value |
|---|---|---|---|---|---|---|---|
| 1 One Story Frame | 1960 | 347 | 0 0 | 0 | 0 % | 0 % | |
| 21 Open Frame | 1960 | 52 | 0 0 | 0 | 0 % | 0 % | |
| 23 Frame Garage | 1960 | 266 | 3 95 | 3 | 0 % | 80 % | |
| 24 Frame Shed | 0 | | | | % | % | 1,000 |
| 68 Wood Deck | 2000 | 56 | 0 0 | 0 | 0 % | 0 % | |
| 24 Frame Shed | 0 | | | | % | % | 800 |
| 1 One Story Frame | 2000 | 240 | 2 110 | 4 | 0 % | 100 % | |
| | | | | | % | % | |
| | | | | | % | % | |
| | | | | | % | % | |

1.One Story Fram
2.Two Story Fram
3.Three Story Fr
4.1 & 1/2 Story
5.1 & 3/4 Story
6.2 & 1/2 Story
21.Open Frame Por
22.Encl Frame Por
23.Frame Garage
24.Frame Shed
25.Frame Bay Wind
26.1SFr Overhang
27.Unfin Basement
28.Unfinished Att
29.Finished Attic

Map Lot 004-005 Account 647 Location 83 GARDNER CREEK ROAD Card 1 Of 1 11/18/2020

ROBICHAUD, LARRY A.

P.O. BOX 383

PRESQUE ISLE ME 04786
B2429P199 B4566P48

## Property Data

| | |
|---|---|
| Neighborhood | **1 Neighborhood One** |
| Tree Growth Year | **0** |
| 1ST MORTGAGE | **0** |
| 2ND MORTGAGE | **0** |
| Zone/Land Use | **1 Residential** |
| Secondary Zone | |
| Topography | **3 Above Street** |

| | | |
|---|---|---|
| 1.Level | 4.Below St | 7.LevelBog |
| 2.Rolling | 5.Low | 8. |
| 3.Above St | 6.Swampy | 9. |

| | | |
|---|---|---|
| Utilities | **4 Drilled Well** | **6 Septic System** |
| 1.Public | 4.Dr Well | 7.Cesspool |
| 2.Water | 5.Dug Well | 8. |
| 3.Sewer | 6.Septic | 9.None |

| | | |
|---|---|---|
| Street | **1 Paved** | |
| 1.Paved | 4.Proposed | 7. |
| 2.Semi Imp | 5.R/O/W | 8. |
| 3.Gravel | 6. | 9.None |

| | |
|---|---|
| TG PLAN YEAR | **0** |
| Tif District # | **0** |

## Sale Data

| | |
|---|---|
| Sale Date | **2/11/1992** |
| Price | |
| Sale Type | **2 Land & Buildings** |

| | | |
|---|---|---|
| 1.Land | 4.Mobile | 7.C/I L&B |
| 2.L & B | 5.Other | 8. |
| 3.Building | 6.C/I Land | 9. |

| | | |
|---|---|---|
| Financing | **1 Conventional** | |
| 1.Convent | 4.Seller | 7. |
| 2.FHA/VA | 5.Private | 8. |
| 3.Assumed | 6.Cash | 9.Unknown |

| | | |
|---|---|---|
| Validity | **2 Related Parties** | |
| 1.Valid | 4.Split | 7.Renovate |
| 2.Related | 5.Partial | 8.Other |
| 3.Distress | 6.Exempt | 9. |

| | | |
|---|---|---|
| Verified | **5 Public Record** | |
| 1.Buyer | 4.Agent | 7.Family |
| 2.Seller | 5.Pub Rec | 8.Other |
| 3.Lender | 6.MLS | 9. |

## Assessment Record

| Year | Land | Buildings | Exempt | Total |
|---|---|---|---|---|
| 2007 | 6,600 | 50,300 | 13,000 | 43,900 |
| 2008 | 6,600 | 50,300 | 13,000 | 43,900 |
| 2009 | 6,200 | 50,300 | 14,400 | 42,100 |
| 2012 | 6,200 | 50,300 | 14,080 | 42,420 |
| 2013 | 8,100 | 50,300 | 14,080 | 44,320 |
| 2015 | 8,100 | 50,300 | 14,400 | 44,000 |
| 2018 | 8,100 | 50,300 | 23,920 | 34,480 |
| 2019 | 16,900 | 79,300 | 26,000 | 70,200 |
| 2020 | 16,900 | 79,300 | 31,000 | 65,200 |

## Land Data

| Front Foot | Type | Effective Frontage | Effective Depth | Influence Factor | Influence Code |
|---|---|---|---|---|---|
| 11.Regular Lot | | | | % | |
| 12.Delta Triangle | | | | % | |
| 13.Nabla Triangle | | | | % | |
| 14.Rear Land | | | | % | |
| 15.Class I Road | | | | % | |
| | | | | % | |
| | | | | % | |
| **Square Foot** | | **Square Feet** | | | |
| 16.Class II Road | | | | % | |
| 17.Municipal Rese | | | | % | |
| 18.Munic Sep Lago | | | | % | |
| 19.Gravel Pit | | | | % | |
| 20.Industrial Bas | | | | % | |
| | | | | % | |
| | | | | % | |
| **Fract. Acre** | | **Acreage/Sites** | | | |
| 21.Developed Pave | 21 | 1.00 | 100 | % | 0 |
| 22.Undev Paved (F | 28 | 0.75 | 100 | % | 0 |
| 23.Developed Grav | | | | % | |
| **Acres** | | | | % | |
| 24.Undev Gravel ( | | | | % | |
| 25.Comm Base Pave | | | | % | |
| 26.Comm Base Grav | | | | % | |
| 27.Backlot | | | | % | |
| 28.Rear Land | | | | % | |
| 29.Pavement | | | | % | |

**Total Acreage** 1.75

### Influence Codes

1.Unimproved
2.Excess Frtg
3.Topography
4.Size/Shape
5.Access
6.Restriction
7.Open Space
8.View/Environ
9.Fract Share
**Acres**
30.Utility R O W
31.Tillable
32.Pasture
33.Orchard
34.Softwood F&O
35.Mixed Wood F&O
36.Hardwood F&O
37.Softwood TG
38.Mixed Wood TG
39.Hardwood TG
40.Wasteland
41.Open Space
42.Mobile Home Si
43.Condo Site
44.Lot Improvemen
45.Subdivision Lo
46.Heavy Ind Sit

Inspection Witnessed By:

X Date

| No./Date | Description | Date Insp. |
|---|---|---|
| | | |
| | | |
| | | |

Notes:

*Garage -5% for 1/4 attached, -15% for size obsol. during reval. -20% off dwelling due to basement wall falling in and the roof bowing.

**Washburn**

# Washburn

Map Lot 004-005 | Account 647 | Location 83 GARDNER CREEK ROAD | Card 1 Of 1 | 11/18/2020

| | | | |
|---|---|---|---|
| Building Style | **1 Conventional** | | |
| 1.Conv. | 5.Garrison | 9.Gambrel | |
| 2.Ranch | 6.Salt Box | 10.Other | |
| 3.R Ranch | 7.Contemp | 11.Split | |
| 4.Cape | 8.Log | 12. | |
| Dwelling Units | **1** | | |
| Other Units | **0** | | |
| Stories | **2 Two Story** | | |
| 1.1 | 4.1.5 | 7. | |
| 2.2 | 5.1.75 | 8. | |
| 3.3 | 6.2.5 | 9. | |
| Exterior Walls | **2 Vinyl/Aluminum** | | |
| 1.Wood | 5.Stucco | 9.T-111 | |
| 2.Vin/Al | 6.Brick | 10.Other | |
| 3.Compos. | 7.Stone | 11. | |
| 4.Asbestos | 8.Concrete | 12. | |
| Roof Surface | **3 Sheet Metal** | | |
| 1.Asphalt | 4.Composit | 7. | |
| 2.Slate | 5.Wood | 8. | |
| 3.Metal | 6.Other | 9. | |
| SF Masonry Trim | **0** | | |
| OPEN-3-CUSTOM | **0** | | |
| OPEN-4-CUSTOM | **0** | | |
| Year Built | **1904** | | |
| Year Remodeled | **1960** | | |
| Foundation | **1 Concrete** | | |
| 1.Concrete | 4.Wood | 7. | |
| 2.C Block | 5.Slab | 8. | |
| 3.Br/Stone | 6.Piers | 9. | |
| Basement | **4 Full Basement** | | |
| 1.1/4 Bmt | 4.Full Bmt | 7. | |
| 2.1/2 Bmt | 5.None | 8. | |
| 3.3/4 Bmt | 6. | 9.None | |
| Bsmt Gar # Cars | **0** | | |
| Wet Basement | **2 Damp Basement** | | |
| 1.Dry | 4. | 7. | |
| 2.Damp | 5. | 8. | |
| 3.Wet | 6. | 9. | |

| | | | |
|---|---|---|---|
| SF Bsmt Living | **0** | | |
| Fin Bsmt Grade | **0 0** | | |
| OPEN 5 OPTIONAL | **0** | | |
| Heat Type | **100%** | **1 Hot Water BB** | |
| 1.HWBB | 5.FWA | 9.No Heat | |
| 2.HWCI | 6.GravWA | 10. | |
| 3.H Pump | 7.Electric | 11. | |
| 4.Steam | 8.Fl/Wall | 12. | |
| Cool Type | **0%** | **9 None** | |
| 1.Refrig | 4.W&C Air | 7. | |
| 2.Evapor | 5. | 8. | |
| 3.H Pump | 6. | 9.None | |
| Kitchen Style | **2 Typical** | | |
| 1.Modern | 4.Obsolete | 7. | |
| 2.Typical | 5. | 8. | |
| 3.Old Type | 6. | 9.None | |
| Bath(s) Style | **2 Typical Bath(s)** | | |
| 1.Modern | 4.Obsolete | 7. | |
| 2.Typical | 5. | 8. | |
| 3.Old Type | 6. | 9.None | |
| # Rooms | **10** | | |
| # Bedrooms | **4** | | |
| # Full Baths | **2** | | |
| # Half Baths | **1** | | |
| # Addn Fixtures | **0** | | |
| # Fireplaces | **0** | | |

TRIO Software
A Division of Harris Computer Systems

| | | | |
|---|---|---|---|
| Layout | **1 Typical** | | |
| 1.Typical | 4. | 7. | |
| 2.Inadeq | 5. | 8. | |
| 3.Poor | 6. | 9. | |
| Attic | **9 None** | | |
| 1.1/4 Fin | 4.Full Fin | 7. | |
| 2.1/2 Fin | 5.Fl/Stair | 8. | |
| 3.3/4 Fin | 6. | 9.None | |
| Insulation | **4 Minimal** | | |
| 1.Full | 4.Minimal | 7. | |
| 2.Heavy | 5.Partial | 8. | |
| 3.Capped | 6. | 9.None | |
| Unfinished % | **0%** | | |
| Grade & Factor | **2 Fair 110%** | | |
| 1.E Grade | 4.B Grade | 7. | |
| 2.D Grade | 5.A Grade | 8.SC Grade | |
| 3.C Grade | 6.AA Grade | 9.Same | |
| SQFT (Footprint) | **616** | | |
| Condition | **5 Above Average** | | |
| 1.Poor | 4.Avg | 7.V G | |
| 2.Fair | 5.Avg+ | 8.Exc | |
| 3.Avg- | 6.Good | 9.Same | |
| Phys. % Good | **0%** | | |
| Funct. % Good | **80%** | | |
| Functional Code | **4 Delapidation** | | |
| 1.Incomp | 4.Delap | 7.No Power | |
| 2.O-Built | 5.Bsmt | 8.LongTerm | |
| 3.Damage | 6.Common | 9.None | |
| Econ. % Good | **100%** | | |
| Economic Code | **None** | | |
| 0.None | 3.No Power | 7. | |
| 1.Location | 4.Generate | 8. | |
| 2.Encroach | 9.None | 9. | |
| Entrance Code | **1 Interior Inspect** | | |
| 1.Interior | 4.Vacant | 7. | |
| 2.Refusal | 5.Estimate | 8. | |
| 3.Informed | 6.Reviewed | 9. | |
| Information Code | **1 Owner** | | |
| 1.Owner | 4.Agent | 7. | |
| 2.Relative | 5.Estimate | 8. | |
| 3.Tenant | 6.Other | 9. | |

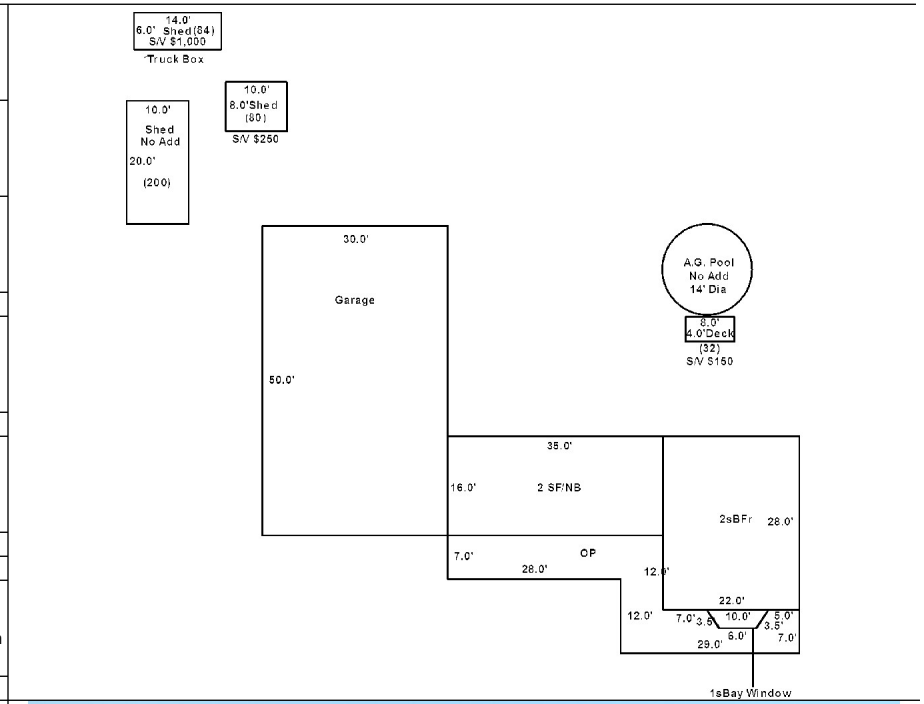


Date Inspected 6/18/2019

## Additions, Outbuildings & Improvements

| Type | Year | Units | Grade | Cond | Phys. | Funct. | Sound Value |
|---|---|---|---|---|---|---|---|
| 25 Frame Bay | 1960 | 24 | 0 0 | 0 | 0 % | 0 % | |
| 21 Open Frame | 1960 | 459 | 2 110 | 3 | 0 % | 0 % | |
| 23 Frame Garage | 1960 | 1500 | 0 0 | 0 | 0 % | 80 % | |
| 68 Wood Deck | 0 | | | | % | % | 150 |
| 24 Frame Shed | 0 | | | | % | % | 1,000 |
| 24 Frame Shed | 0 | | | | % | % | 250 |
| 2 Two Story Frame | 1904 | 560 | 2 105 | 5 | 0 % | 90 % | |
| | | | | | % | % | |
| | | | | | % | % | |
| | | | | | % | % | |

1.One Story Fram
2.Two Story Fram
3.Three Story Fr
4.1 & 1/2 Story
5.1 & 3/4 Story
6.2 & 1/2 Story
21.Open Frame Por
22.Encl Frame Por
23.Frame Garage
24.Frame Shed
25.Frame Bay Wind
26.1SFr Overhang
27.Unfin Basement
28.Unfinished Att
29.Finished Attic

Map Lot 004-008/9 Account 284 Location VICTORIA STREET Card 1 Of 1 11/18/2020

COREY, MIKE

42 VICTORIA STREET

WASHBURN ME 04786
B5467P318

## Property Data

Neighborhood **1 Neighborhood One**

Tree Growth Year **0**

1ST MORTGAGE **0**

2ND MORTGAGE **0**

Zone/Land Use **1 Residential**

Secondary Zone

Topography **1 Level**

| | | |
|---|---|---|
| 1.Level | 4.Below St | 7.LevelBog |
| 2.Rolling | 5.Low | 8. |
| 3.Above St | 6.Swampy | 9. |

Utilities

| | | |
|---|---|---|
| 1.Public | 4.Dr Well | 7.Cesspool |
| 2.Water | 5.Dug Well | 8. |
| 3.Sewer | 6.Septic | 9.None |

Street **1 Paved**

| | | |
|---|---|---|
| 1.Paved | 4.Proposed | 7. |
| 2.Semi Imp | 5.R/O/W | 8. |
| 3.Gravel | 6. | 9.None |

TG PLAN YEAR **0**

Tif District # **0**

## Sale Data

Sale Date **7/01/1999**

Price **4,950**

Sale Type **1 Land Only**

| | | |
|---|---|---|
| 1.Land | 4.Mobile | 7.C/I L&B |
| 2.L & B | 5.Other | 8. |
| 3.Building | 6.C/I Land | 9. |

Financing

| | | |
|---|---|---|
| 1.Convent | 4.Seller | 7. |
| 2.FHA/VA | 5.Private | 8. |
| 3.Assumed | 6.Cash | 9.Unknown |

Validity **1 Arms Length Sale**

| | | |
|---|---|---|
| 1.Valid | 4.Split | 7.Renovate |
| 2.Related | 5.Partial | 8.Other |
| 3.Distress | 6.Exempt | 9. |

Verified **5 Public Record**

| | | |
|---|---|---|
| 1.Buyer | 4.Agent | 7.Family |
| 2.Seller | 5.Pub Rec | 8.Other |
| 3.Lender | 6.MLS | 9. |

## Assessment Record

| Year | Land | Buildings | Exempt | Total |
|---|---|---|---|---|
| 2007 | 6,800 | 0 | 0 | 6,800 |
| 2008 | 6,800 | 0 | 0 | 6,800 |
| 2009 | 5,600 | 0 | 0 | 5,600 |
| 2012 | 5,600 | 0 | 0 | 5,600 |
| 2013 | 7,300 | 0 | 0 | 7,300 |
| 2015 | 7,300 | 0 | 0 | 7,300 |
| 2018 | 7,300 | 0 | 0 | 7,300 |
| 2019 | 12,300 | 0 | 0 | 12,300 |
| 2020 | 12,300 | 0 | 0 | 12,300 |

## Land Data

| Front Foot | Type | Effective Frontage | Effective Depth | Influence Factor | Influence Code |
|---|---|---|---|---|---|
| 11.Regular Lot | | | | % | |
| 12.Delta Triangle | | | | % | |
| 13.Nabla Triangle | | | | % | |
| 14.Rear Land | | | | % | |
| 15.Class I Road | | | | % | |
| | | | | % | |
| | | | | % | |
| **Square Foot** | | **Square Feet** | | | |
| 16.Class II Road | | | | % | |
| 17.Municipal Rese | | | | % | |
| 18.Munic Sep Lago | | | | % | |
| 19.Gravel Pit | | | | % | |
| 20.Industrial Bas | | | | % | |
| | | | | % | |
| | | | | % | |
| **Fract. Acre** | | **Acreage/Sites** | | | |
| 21.Developed Pave | 22 | 1.00 | 100 | % | 0 |
| 22.Undev Paved (F | 28 | 6.50 | 100 | % | 0 |
| 23.Developed Grav | | | | % | |
| **Acres** | | | | % | |
| 24.Undev Gravel ( | | | | % | |
| 25.Comm Base Pave | | | | % | |
| 26.Comm Base Grav | | | | % | |
| 27.Backlot | | | | % | |
| 28.Rear Land | | | | % | |
| 29.Pavement | | | | % | |

**Total Acreage** 7.50

### Influence Codes

1.Unimproved
2.Excess Frtg
3.Topography
4.Size/Shape
5.Access
6.Restriction
7.Open Space
8.View/Environ
9.Fract Share
**Acres**
30.Utility R O W
31.Tillable
32.Pasture
33.Orchard
34.Softwood F&O
35.Mixed Wood F&O
36.Hardwood F&O
37.Softwood TG
38.Mixed Wood TG
39.Hardwood TG
40.Wasteland
41.Open Space
42.Mobile Home Si
43.Condo Site
44.Lot Improvemen
45.Subdivision Lo
46.Heavy Ind Sit

Inspection Witnessed By:

X Date

| No./Date | Description | Date Insp. |
|---|---|---|
| | | |
| | | |
| | | |

Notes:

**Washburn**

# Washburn

Map Lot 004-008/9 | Account 284 | Location VICTORIA STREET | Card 1 Of 1 | 11/18/2020

| | | |
|---|---|---|
| Building Style **0** | | |
| 1.Conv. | 5.Garrison | 9.Gambrel |
| 2.Ranch | 6.Salt Box | 10.Other |
| 3.R Ranch | 7.Contemp | 11.Split |
| 4.Cape | 8.Log | 12. |
| Dwelling Units **0** | | |
| Other Units **0** | | |
| Stories **0** | | |
| 1.1 | 4.1.5 | 7. |
| 2.2 | 5.1.75 | 8. |
| 3.3 | 6.2.5 | 9. |
| Exterior Walls **0** | | |
| 1.Wood | 5.Stucco | 9.T-111 |
| 2.Vin/Al | 6.Brick | 10.Other |
| 3.Compos. | 7.Stone | 11. |
| 4.Asbestos | 8.Concrete | 12. |
| Roof Surface **0** | | |
| 1.Asphalt | 4.Composit | 7. |
| 2.Slate | 5.Wood | 8. |
| 3.Metal | 6.Other | 9. |
| SF Masonry Trim **0** | | |
| OPEN-3-CUSTOM **0** | | |
| OPEN-4-CUSTOM **0** | | |
| Year Built **0** | | |
| Year Remodeled **0** | | |
| Foundation **0** | | |
| 1.Concrete | 4.Wood | 7. |
| 2.C Block | 5.Slab | 8. |
| 3.Br/Stone | 6.Piers | 9. |
| Basement **0** | | |
| 1.1/4 Bmt | 4.Full Bmt | 7. |
| 2.1/2 Bmt | 5.None | 8. |
| 3.3/4 Bmt | 6. | 9.None |
| Bsmt Gar # Cars **0** | | |
| Wet Basement **0** | | |
| 1.Dry | 4. | 7. |
| 2.Damp | 5. | 8. |
| 3.Wet | 6. | 9. |

| | | |
|---|---|---|
| SF Bsmt Living **0** | | |
| Fin Bsmt Grade **0 0** | | |
| OPEN 5 OPTIONAL **0** | | |
| Heat Type **100%** **0** | | |
| 1.HWBB | 5.FWA | 9.No Heat |
| 2.HWCI | 6.GravWA | 10. |
| 3.H Pump | 7.Electric | 11. |
| 4.Steam | 8.Fl/Wall | 12. |
| Cool Type **0%** **9 None** | | |
| 1.Refrig | 4.W&C Air | 7. |
| 2.Evapor | 5. | 8. |
| 3.H Pump | 6. | 9.None |
| Kitchen Style **0** | | |
| 1.Modern | 4.Obsolete | 7. |
| 2.Typical | 5. | 8. |
| 3.Old Type | 6. | 9.None |
| Bath(s) Style **0** | | |
| 1.Modern | 4.Obsolete | 7. |
| 2.Typical | 5. | 8. |
| 3.Old Type | 6. | 9.None |
| # Rooms **0** | | |
| # Bedrooms **0** | | |
| # Full Baths **0** | | |
| # Half Baths **0** | | |
| # Addn Fixtures **0** | | |
| # Fireplaces **0** | | |

TRIO Software
A Division of Harris Computer Systems

| | | |
|---|---|---|
| Layout **0** | | |
| 1.Typical | 4. | 7. |
| 2.Inadeq | 5. | 8. |
| 3.Poor | 6. | 9. |
| Attic **0** | | |
| 1.1/4 Fin | 4.Full Fin | 7. |
| 2.1/2 Fin | 5.Fl/Stair | 8. |
| 3.3/4 Fin | 6. | 9.None |
| Insulation **0** | | |
| 1.Full | 4.Minimal | 7. |
| 2.Heavy | 5.Partial | 8. |
| 3.Capped | 6. | 9.None |
| Unfinished % **0%** | | |
| Grade & Factor **0 0%** | | |
| 1.E Grade | 4.B Grade | 7. |
| 2.D Grade | 5.A Grade | 8.SC Grade |
| 3.C Grade | 6.AA Grade | 9.Same |
| SQFT (Footprint) **0** | | |
| Condition **0** | | |
| 1.Poor | 4.Avg | 7.V G |
| 2.Fair | 5.Avg+ | 8.Exc |
| 3.Avg- | 6.Good | 9.Same |
| Phys. % Good **0%** | | |
| Funct. % Good **100%** | | |
| Functional Code **9 None** | | |
| 1.Incomp | 4.Delap | 7.No Power |
| 2.O-Built | 5.Bsmt | 8.LongTerm |
| 3.Damage | 6.Common | 9.None |
| Econ. % Good **100%** | | |
| Economic Code **None** | | |
| 0.None | 3.No Power | 7. |
| 1.Location | 4.Generate | 8. |
| 2.Encroach | 9.None | 9. |
| Entrance Code **0** | | |
| 1.Interior | 4.Vacant | 7. |
| 2.Refusal | 5.Estimate | 8. |
| 3.Informed | 6.Reviewed | 9. |
| Information Code **0** | | |
| 1.Owner | 4.Agent | 7. |
| 2.Relative | 5.Estimate | 8. |
| 3.Tenant | 6.Other | 9. |

Date Inspected

## Additions, Outbuildings & Improvements

| Type | Year | Units | Grade | Cond | Phys. | Funct. | Sound Value |
|---|---|---|---|---|---|---|---|
| | | | | | % | % | |
| | | | | | % | % | |
| | | | | | % | % | |
| | | | | | % | % | |
| | | | | | % | % | |
| | | | | | % | % | |
| | | | | | % | % | |
| | | | | | % | % | |
| | | | | | % | % | |
| | | | | | % | % | |

1.One Story Fram
2.Two Story Fram
3.Three Story Fr
4.1 & 1/2 Story
5.1 & 3/4 Story
6.2 & 1/2 Story
21.Open Frame Por
22.Encl Frame Por
23.Frame Garage
24.Frame Shed
25.Frame Bay Wind
26.1SFr Overhang
27.Unfin Basement
28.Unfinished Att
29.Finished Attic

Map Lot 004-010 Account 652 Location 24 McManus Street Card 1 Of 1 11/18/2020

Roman Catholic Bishop of Portland ME

c/o St. Catherine's Church
P.O. Box 625
Caribou ME 04736
B1837P247

## Property Data

Neighborhood **1 Neighborhood One**

Tree Growth Year **0**

1ST MORTGAGE **0**

2ND MORTGAGE **0**

Zone/Land Use **1 Residential**

Secondary Zone

Topography **1 Level**

| | | |
|---|---|---|
| 1.Level | 4.Below St | 7.LevelBog |
| 2.Rolling | 5.Low | 8. |
| 3.Above St | 6.Swampy | 9. |

Utilities

| | | |
|---|---|---|
| 1.Public | 4.Dr Well | 7.Cesspool |
| 2.Water | 5.Dug Well | 8. |
| 3.Sewer | 6.Septic | 9.None |

Street **1 Paved**

| | | |
|---|---|---|
| 1.Paved | 4.Proposed | 7. |
| 2.Semi Imp | 5.R/O/W | 8. |
| 3.Gravel | 6. | 9.None |

TG PLAN YEAR **0**

Tif District # **0**

## Sale Data

Sale Date

Price

Sale Type **1 Land Only**

| | | |
|---|---|---|
| 1.Land | 4.Mobile | 7.C/I L&B |
| 2.L & B | 5.Other | 8. |
| 3.Building | 6.C/I Land | 9. |

Financing

| | | |
|---|---|---|
| 1.Convent | 4.Seller | 7. |
| 2.FHA/VA | 5.Private | 8. |
| 3.Assumed | 6.Cash | 9.Unknown |

Validity

| | | |
|---|---|---|
| 1.Valid | 4.Split | 7.Renovate |
| 2.Related | 5.Partial | 8.Other |
| 3.Distress | 6.Exempt | 9. |

Verified

| | | |
|---|---|---|
| 1.Buyer | 4.Agent | 7.Family |
| 2.Seller | 5.Pub Rec | 8.Other |
| 3.Lender | 6.MLS | 9. |

## Assessment Record

| Year | Land | Buildings | Exempt | Total |
|---|---|---|---|---|
| 2007 | 8,100 | 0 | 8,100 | 0 |
| 2008 | 8,100 | 0 | 8,100 | 0 |
| 2009 | 6,100 | 0 | 6,100 | 0 |
| 2012 | 6,100 | 0 | 6,100 | 0 |
| 2013 | 8,000 | 0 | 8,000 | 0 |
| 2015 | 8,000 | 0 | 8,000 | 0 |
| 2018 | 8,000 | 0 | 8,000 | 0 |
| 2019 | 12,300 | 0 | 12,300 | 0 |
| 2020 | 12,300 | 0 | 12,300 | 0 |

## Land Data

| Front Foot | Type | Effective Frontage | Effective Depth | Influence Factor | Influence Code |
|---|---|---|---|---|---|
| 11.Regular Lot | | | | % | |
| 12.Delta Triangle | | | | % | |
| 13.Nabla Triangle | | | | % | |
| 14.Rear Land | | | | % | |
| 15.Class I Road | | | | % | |
| | | | | % | |
| | | | | % | |
| **Square Foot** | | **Square Feet** | | | |
| 16.Class II Road | | | | % | |
| 17.Municipal Rese | | | | % | |
| 18.Munic Sep Lago | | | | % | |
| 19.Gravel Pit | | | | % | |
| 20.Industrial Bas | | | | % | |
| | | | | % | |
| | | | | % | |
| **Fract. Acre** | | **Acreage/Sites** | | | |
| 21.Developed Pave | 22 | 1.00 | 100 | % | 0 |
| 22.Undev Paved (F | 28 | 6.50 | 100 | % | 0 |
| 23.Developed Grav | | | | % | |
| **Acres** | | | | % | |
| 24.Undev Gravel ( | | | | % | |
| 25.Comm Base Pave | | | | % | |
| 26.Comm Base Grav | | | | % | |
| 27.Backlot | | | | % | |
| 28.Rear Land | | | | % | |
| 29.Pavement | | | | % | |

**Total Acreage** 7.50

### Influence Codes

1.Unimproved
2.Excess Frtg
3.Topography
4.Size/Shape
5.Access
6.Restriction
7.Open Space
8.View/Environ
9.Fract Share
**Acres**
30.Utility R O W
31.Tillable
32.Pasture
33.Orchard
34.Softwood F&O
35.Mixed Wood F&O
36.Hardwood F&O
37.Softwood TG
38.Mixed Wood TG
39.Hardwood TG
40.Wasteland
41.Open Space
42.Mobile Home Si
43.Condo Site
44.Lot Improvemen
45.Subdivision Lo
46.Heavy Ind Sit

Inspection Witnessed By:

X Date

| No./Date | Description | Date Insp. |
|---|---|---|
| | | |
| | | |
| | | |

Notes:

**Washburn**

# Washburn

Map Lot 004-010 | Account 652 | Location 24 McManus Street | Card 1 Of 1 | 11/18/2020

| | | |
|---|---|---|
| Building Style **0** | | |
| 1.Conv. | 5.Garrison | 9.Gambrel |
| 2.Ranch | 6.Salt Box | 10.Other |
| 3.R Ranch | 7.Contemp | 11.Split |
| 4.Cape | 8.Log | 12. |
| Dwelling Units **0** | | |
| Other Units **0** | | |
| Stories **0** | | |
| 1.1 | 4.1.5 | 7. |
| 2.2 | 5.1.75 | 8. |
| 3.3 | 6.2.5 | 9. |
| Exterior Walls **0** | | |
| 1.Wood | 5.Stucco | 9.T-111 |
| 2.Vin/Al | 6.Brick | 10.Other |
| 3.Compos. | 7.Stone | 11. |
| 4.Asbestos | 8.Concrete | 12. |
| Roof Surface **0** | | |
| 1.Asphalt | 4.Composit | 7. |
| 2.Slate | 5.Wood | 8. |
| 3.Metal | 6.Other | 9. |
| SF Masonry Trim **0** | | |
| OPEN-3-CUSTOM **0** | | |
| OPEN-4-CUSTOM **0** | | |
| Year Built **0** | | |
| Year Remodeled **0** | | |
| Foundation **0** | | |
| 1.Concrete | 4.Wood | 7. |
| 2.C Block | 5.Slab | 8. |
| 3.Br/Stone | 6.Piers | 9. |
| Basement **0** | | |
| 1.1/4 Bmt | 4.Full Bmt | 7. |
| 2.1/2 Bmt | 5.None | 8. |
| 3.3/4 Bmt | 6. | 9.None |
| Bsmt Gar # Cars **0** | | |
| Wet Basement **0** | | |
| 1.Dry | 4. | 7. |
| 2.Damp | 5. | 8. |
| 3.Wet | 6. | 9. |

| | | |
|---|---|---|
| SF Bsmt Living **0** | | |
| Fin Bsmt Grade **0 0** | | |
| OPEN 5 OPTIONAL **0** | | |
| Heat Type **100%** **0** | | |
| 1.HWBB | 5.FWA | 9.No Heat |
| 2.HWCI | 6.GravWA | 10. |
| 3.H Pump | 7.Electric | 11. |
| 4.Steam | 8.Fl/Wall | 12. |
| Cool Type **0%** **9 None** | | |
| 1.Refrig | 4.W&C Air | 7. |
| 2.Evapor | 5. | 8. |
| 3.H Pump | 6. | 9.None |
| Kitchen Style **0** | | |
| 1.Modern | 4.Obsolete | 7. |
| 2.Typical | 5. | 8. |
| 3.Old Type | 6. | 9.None |
| Bath(s) Style **0** | | |
| 1.Modern | 4.Obsolete | 7. |
| 2.Typical | 5. | 8. |
| 3.Old Type | 6. | 9.None |
| # Rooms **0** | | |
| # Bedrooms **0** | | |
| # Full Baths **0** | | |
| # Half Baths **0** | | |
| # Addn Fixtures **0** | | |
| # Fireplaces **0** | | |

TRIO Software
A Division of Harris Computer Systems

| | | |
|---|---|---|
| Layout **0** | | |
| 1.Typical | 4. | 7. |
| 2.Inadeq | 5. | 8. |
| 3.Poor | 6. | 9. |
| Attic **0** | | |
| 1.1/4 Fin | 4.Full Fin | 7. |
| 2.1/2 Fin | 5.Fl/Stair | 8. |
| 3.3/4 Fin | 6. | 9.None |
| Insulation **0** | | |
| 1.Full | 4.Minimal | 7. |
| 2.Heavy | 5.Partial | 8. |
| 3.Capped | 6. | 9.None |
| Unfinished % **0%** | | |
| Grade & Factor **0 0%** | | |
| 1.E Grade | 4.B Grade | 7. |
| 2.D Grade | 5.A Grade | 8.SC Grade |
| 3.C Grade | 6.AA Grade | 9.Same |
| SQFT (Footprint) **0** | | |
| Condition **0** | | |
| 1.Poor | 4.Avg | 7.V G |
| 2.Fair | 5.Avg+ | 8.Exc |
| 3.Avg- | 6.Good | 9.Same |
| Phys. % Good **0%** | | |
| Funct. % Good **100%** | | |
| Functional Code **9 None** | | |
| 1.Incomp | 4.Delap | 7.No Power |
| 2.O-Built | 5.Bsmt | 8.LongTerm |
| 3.Damage | 6.Common | 9.None |
| Econ. % Good **100%** | | |
| Economic Code **None** | | |
| 0.None | 3.No Power | 7. |
| 1.Location | 4.Generate | 8. |
| 2.Encroach | 9.None | 9. |
| Entrance Code **0** | | |
| 1.Interior | 4.Vacant | 7. |
| 2.Refusal | 5.Estimate | 8. |
| 3.Informed | 6.Reviewed | 9. |
| Information Code **0** | | |
| 1.Owner | 4.Agent | 7. |
| 2.Relative | 5.Estimate | 8. |
| 3.Tenant | 6.Other | 9. |

Date Inspected

## Additions, Outbuildings & Improvements

| Type | Year | Units | Grade | Cond | Phys. | Funct. | Sound Value |
|---|---|---|---|---|---|---|---|
| | | | | | % | % | |
| | | | | | % | % | |
| | | | | | % | % | |
| | | | | | % | % | |
| | | | | | % | % | |
| | | | | | % | % | |
| | | | | | % | % | |
| | | | | | % | % | |
| | | | | | % | % | |
| | | | | | % | % | |

1.One Story Fram
2.Two Story Fram
3.Three Story Fr
4.1 & 1/2 Story
5.1 & 3/4 Story
6.2 & 1/2 Story
21.Open Frame Por
22.Encl Frame Por
23.Frame Garage
24.Frame Shed
25.Frame Bay Wind
26.1SFr Overhang
27.Unfin Basement
28.Unfinished Att
29.Finished Attic

Map Lot 004-011 Account 39 Location 44 CHURCH STREET Card 1 Of 1 11/18/2020

BRAGG, MARK A.
BRAGG, DIANA L.
P.O. BOX 108

WASHBURN ME 04786
B2720P122 B3895P75 B5598P226

## Property Data

Neighborhood **1 Neighborhood One**

Tree Growth Year **0**

1ST MORTGAGE **0**

2ND MORTGAGE **0**

Zone/Land Use **1 Residential**

Secondary Zone

Topography **1 Level**

| | | |
|---|---|---|
| 1.Level | 4.Below St | 7.LevelBog |
| 2.Rolling | 5.Low | 8. |
| 3.Above St | 6.Swampy | 9. |

Utilities **2 Public Water** **3 Public Sewer**

| | | |
|---|---|---|
| 1.Public | 4.Dr Well | 7.Cesspool |
| 2.Water | 5.Dug Well | 8. |
| 3.Sewer | 6.Septic | 9.None |

Street **1 Paved**

| | | |
|---|---|---|
| 1.Paved | 4.Proposed | 7. |
| 2.Semi Imp | 5.R/O/W | 8. |
| 3.Gravel | 6. | 9.None |

TG PLAN YEAR **0**

Tif District # **0**

## Sale Data

Sale Date **9/01/1994**

Price **49,000**

Sale Type **2 Land & Buildings**

| | | |
|---|---|---|
| 1.Land | 4.Mobile | 7.C/I L&B |
| 2.L & B | 5.Other | 8. |
| 3.Building | 6.C/I Land | 9. |

Financing **1 Conventional**

| | | |
|---|---|---|
| 1.Convent | 4.Seller | 7. |
| 2.FHA/VA | 5.Private | 8. |
| 3.Assumed | 6.Cash | 9.Unknown |

Validity **1 Arms Length Sale**

| | | |
|---|---|---|
| 1.Valid | 4.Split | 7.Renovate |
| 2.Related | 5.Partial | 8.Other |
| 3.Distress | 6.Exempt | 9. |

Verified **5 Public Record**

| | | |
|---|---|---|
| 1.Buyer | 4.Agent | 7.Family |
| 2.Seller | 5.Pub Rec | 8.Other |
| 3.Lender | 6.MLS | 9. |

## Assessment Record

| Year | Land | Buildings | Exempt | Total |
|---|---|---|---|---|
| 2007 | 10,400 | 57,800 | 13,000 | 55,200 |
| 2008 | 10,400 | 74,200 | 13,000 | 71,600 |
| 2009 | 10,400 | 74,200 | 9,000 | 75,600 |
| 2012 | 10,400 | 74,200 | 8,800 | 75,800 |
| 2013 | 13,500 | 74,200 | 8,800 | 78,900 |
| 2015 | 13,500 | 74,200 | 9,000 | 78,700 |
| 2018 | 13,500 | 74,200 | 18,400 | 69,300 |
| 2019 | 18,400 | 84,600 | 20,000 | 83,000 |
| 2020 | 18,400 | 84,600 | 25,000 | 78,000 |

## Land Data

| Front Foot | Type | Effective Frontage | Effective Depth | Influence Factor | Influence Code |
|---|---|---|---|---|---|
| 11.Regular Lot | | | | % | |
| 12.Delta Triangle | | | | % | |
| 13.Nabla Triangle | | | | % | |
| 14.Rear Land | | | | % | |
| 15.Class I Road | | | | % | |
| | | | | % | |
| | | | | % | |
| **Square Foot** | | **Square Feet** | | | |
| 16.Class II Road | 29 | 1,000 | | 75 % | 0 |
| 17.Municipal Rese | | | | % | |
| 18.Munic Sep Lago | | | | % | |
| 19.Gravel Pit | | | | % | |
| 20.Industrial Bas | | | | % | |
| | | | | % | |
| | | | | % | |
| **Fract. Acre** | | **Acreage/Sites** | | | |
| 21.Developed Pave | 21 | 1.00 | | 100 % | 0 |
| 22.Undev Paved (F | 28 | 0.12 | | 100 % | 0 |
| 23.Developed Grav | | | | % | |
| **Acres** | | | | % | |
| 24.Undev Gravel ( | | | | % | |
| 25.Comm Base Pave | | | | % | |
| 26.Comm Base Grav | | | | % | |
| 27.Backlot | | | | % | |
| 28.Rear Land | | | | % | |
| 29.Pavement | | | | % | |

**Total Acreage** 1.12

### Influence Codes

1.Unimproved
2.Excess Frtg
3.Topography
4.Size/Shape
5.Access
6.Restriction
7.Open Space
8.View/Environ
9.Fract Share
**Acres**
30.Utility R O W
31.Tillable
32.Pasture
33.Orchard
34.Softwood F&O
35.Mixed Wood F&O
36.Hardwood F&O
37.Softwood TG
38.Mixed Wood TG
39.Hardwood TG
40.Wasteland
41.Open Space
42.Mobile Home Si
43.Condo Site
44.Lot Improvemen
45.Subdivision Lo
46.Heavy Ind Sit

Inspection Witnessed By:

X Date

| No./Date | Description | Date Insp. |
|---|---|---|
| | | |
| | | |
| | | |

Notes:

*Garage -10% for 1/2 attached, -15% for size obsol. during reval.

**Washburn**

# Washburn

Map Lot 004-011 | Account 39 | Location 44 CHURCH STREET | Card 1 Of 1 | 11/18/2020

| | | | |
|---|---|---|---|
| Building Style | **4 Cape Cod** | | |
| 1.Conv. | 5.Garrison | 9.Gambrel | |
| 2.Ranch | 6.Salt Box | 10.Other | |
| 3.R Ranch | 7.Contemp | 11.Split | |
| 4.Cape | 8.Log | 12. | |
| Dwelling Units | **1** | | |
| Other Units | **0** | | |
| Stories | **1 One Story** | | |
| 1.1 | 4.1.5 | 7. | |
| 2.2 | 5.1.75 | 8. | |
| 3.3 | 6.2.5 | 9. | |
| Exterior Walls | **2 Vinyl/Aluminum** | | |
| 1.Wood | 5.Stucco | 9.T-111 | |
| 2.Vin/Al | 6.Brick | 10.Other | |
| 3.Compos. | 7.Stone | 11. | |
| 4.Asbestos | 8.Concrete | 12. | |
| Roof Surface | **1 Asphalt Shingles** | | |
| 1.Asphalt | 4.Composit | 7. | |
| 2.Slate | 5.Wood | 8. | |
| 3.Metal | 6.Other | 9. | |
| SF Masonry Trim | **0** | | |
| OPEN-3-CUSTOM | **0** | | |
| OPEN-4-CUSTOM | **0** | | |
| Year Built | **1956** | | |
| Year Remodeled | **0** | | |
| Foundation | **2 Concrete Block** | | |
| 1.Concrete | 4.Wood | 7. | |
| 2.C Block | 5.Slab | 8. | |
| 3.Br/Stone | 6.Piers | 9. | |
| Basement | **4 Full Basement** | | |
| 1.1/4 Bmt | 4.Full Bmt | 7. | |
| 2.1/2 Bmt | 5.None | 8. | |
| 3.3/4 Bmt | 6. | 9.None | |
| Bsmt Gar # Cars | **0** | | |
| Wet Basement | **1 Dry Basement** | | |
| 1.Dry | 4. | 7. | |
| 2.Damp | 5. | 8. | |
| 3.Wet | 6. | 9. | |

| | | | |
|---|---|---|---|
| SF Bsmt Living | **0** | | |
| Fin Bsmt Grade | **0 0** | | |
| OPEN 5 OPTIONAL | **0** | | |
| Heat Type | **100%** | **1 Hot Water BB** | |
| 1.HWBB | 5.FWA | 9.No Heat | |
| 2.HWCI | 6.GravWA | 10. | |
| 3.H Pump | 7.Electric | 11. | |
| 4.Steam | 8.Fl/Wall | 12. | |
| Cool Type | **0%** | **9 None** | |
| 1.Refrig | 4.W&C Air | 7. | |
| 2.Evapor | 5. | 8. | |
| 3.H Pump | 6. | 9.None | |
| Kitchen Style | **2 Typical** | | |
| 1.Modern | 4.Obsolete | 7. | |
| 2.Typical | 5. | 8. | |
| 3.Old Type | 6. | 9.None | |
| Bath(s) Style | **2 Typical Bath(s)** | | |
| 1.Modern | 4.Obsolete | 7. | |
| 2.Typical | 5. | 8. | |
| 3.Old Type | 6. | 9.None | |
| # Rooms | **5** | | |
| # Bedrooms | **3** | | |
| # Full Baths | **1** | | |
| # Half Baths | **0** | | |
| # Addn Fixtures | **0** | | |
| # Fireplaces | **0** | | |

TRIO Software
A Division of Harris Computer Systems

| | | | |
|---|---|---|---|
| Layout | **1 Typical** | | |
| 1.Typical | 4. | 7. | |
| 2.Inadeq | 5. | 8. | |
| 3.Poor | 6. | 9. | |
| Attic | **9 None** | | |
| 1.1/4 Fin | 4.Full Fin | 7. | |
| 2.1/2 Fin | 5.Fl/Stair | 8. | |
| 3.3/4 Fin | 6. | 9.None | |
| Insulation | **4 Minimal** | | |
| 1.Full | 4.Minimal | 7. | |
| 2.Heavy | 5.Partial | 8. | |
| 3.Capped | 6. | 9.None | |
| Unfinished % | **0%** | | |
| Grade & Factor | **2 Fair 110%** | | |
| 1.E Grade | 4.B Grade | 7. | |
| 2.D Grade | 5.A Grade | 8.SC Grade | |
| 3.C Grade | 6.AA Grade | 9.Same | |
| SQFT (Footprint) | **420** | | |
| Condition | **6 Good** | | |
| 1.Poor | 4.Avg | 7.V G | |
| 2.Fair | 5.Avg+ | 8.Exc | |
| 3.Avg- | 6.Good | 9.Same | |
| Phys. % Good | **0%** | | |
| Funct. % Good | **100%** | | |
| Functional Code | **9 None** | | |
| 1.Incomp | 4.Delap | 7.No Power | |
| 2.O-Built | 5.Bsmt | 8.LongTerm | |
| 3.Damage | 6.Common | 9.None | |
| Econ. % Good | **100%** | | |
| Economic Code | **None** | | |
| 0.None | 3.No Power | 7. | |
| 1.Location | 4.Generate | 8. | |
| 2.Encroach | 9.None | 9. | |
| Entrance Code | **1 Interior Inspect** | | |
| 1.Interior | 4.Vacant | 7. | |
| 2.Refusal | 5.Estimate | 8. | |
| 3.Informed | 6.Reviewed | 9. | |
| Information Code | **1 Owner** | | |
| 1.Owner | 4.Agent | 7. | |
| 2.Relative | 5.Estimate | 8. | |
| 3.Tenant | 6.Other | 9. | |

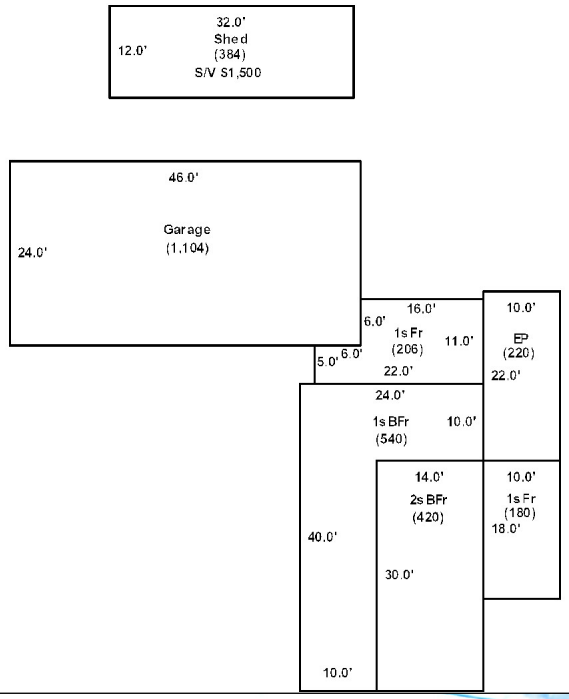


Date Inspected 9/01/2018

## Additions, Outbuildings & Improvements

| Type | Year | Units | Grade | Cond | Phys. | Funct. | Sound Value |
|---|---|---|---|---|---|---|---|
| 1 One Story Frame | 1980 | 180 | 0 0 | 0 | 0 % | 0 % | |
| 20 1 Story/Bsmt | 0 | 540 | 0 0 | 0 | 0 % | 0 % | |
| 22 Encl Frame Porch | 1980 | 220 | 0 0 | 0 | 0 % | 0 % | |
| 1 One Story Frame | 1980 | 206 | 0 0 | 0 | 0 % | 0 % | |
| 23 Frame Garage | 1980 | 1104 | 3 100 | 4 | 0 % | 75 % | |
| 24 Frame Shed | 0 | | | | % | % | 1,500 |
| | | | | | % | % | |
| | | | | | % | % | |
| | | | | | % | % | |
| | | | | | % | % | |

1.One Story Fram
2.Two Story Fram
3.Three Story Fr
4.1 & 1/2 Story
5.1 & 3/4 Story
6.2 & 1/2 Story
21.Open Frame Por
22.Encl Frame Por
23.Frame Garage
24.Frame Shed
25.Frame Bay Wind
26.1SFr Overhang
27.Unfin Basement
28.Unfinished Att
29.Finished Attic

Map Lot 004-012 | Account 174 | Location 48 CHURCH STREET | Card 1 Of 1 | 11/18/2020

BRAGG, LARRY W.
BRAGG, LINDA A.
P.O. BOX 503

WASHBURN ME 04786
B972P218

## Property Data

Neighborhood **1 Neighborhood One**

Tree Growth Year **0**

1ST MORTGAGE **0**

2ND MORTGAGE **0**

Zone/Land Use **1 Residential**

Secondary Zone

Topography **1 Level**

| | | |
|---|---|---|
| 1.Level | 4.Below St | 7.LevelBog |
| 2.Rolling | 5.Low | 8. |
| 3.Above St | 6.Swampy | 9. |

Utilities **2 Public Water** **3 Public Sewer**

| | | |
|---|---|---|
| 1.Public | 4.Dr Well | 7.Cesspool |
| 2.Water | 5.Dug Well | 8. |
| 3.Sewer | 6.Septic | 9.None |

Street **1 Paved**

| | | |
|---|---|---|
| 1.Paved | 4.Proposed | 7. |
| 2.Semi Imp | 5.R/O/W | 8. |
| 3.Gravel | 6. | 9.None |

TG PLAN YEAR **0**

Tif District # **0**

## Sale Data

Sale Date **4/29/1966**

Price

Sale Type **2 Land & Buildings**

| | | |
|---|---|---|
| 1.Land | 4.Mobile | 7.C/I L&B |
| 2.L & B | 5.Other | 8. |
| 3.Building | 6.C/I Land | 9. |

Financing

| | | |
|---|---|---|
| 1.Convent | 4.Seller | 7. |
| 2.FHA/VA | 5.Private | 8. |
| 3.Assumed | 6.Cash | 9.Unknown |

Validity **1 Arms Length Sale**

| | | |
|---|---|---|
| 1.Valid | 4.Split | 7.Renovate |
| 2.Related | 5.Partial | 8.Other |
| 3.Distress | 6.Exempt | 9. |

Verified **5 Public Record**

| | | |
|---|---|---|
| 1.Buyer | 4.Agent | 7.Family |
| 2.Seller | 5.Pub Rec | 8.Other |
| 3.Lender | 6.MLS | 9. |

## Assessment Record

| Year | Land | Buildings | Exempt | Total |
|---|---|---|---|---|
| 2007 | 4,300 | 80,800 | 13,000 | 72,100 |
| 2008 | 4,300 | 80,800 | 13,000 | 72,100 |
| 2009 | 4,300 | 89,600 | 9,000 | 84,900 |
| 2012 | 4,300 | 89,600 | 8,800 | 85,100 |
| 2013 | 5,600 | 89,600 | 8,800 | 86,400 |
| 2015 | 5,600 | 89,600 | 9,000 | 86,200 |
| 2018 | 5,600 | 89,600 | 18,400 | 76,800 |
| 2019 | 12,900 | 94,000 | 20,000 | 86,900 |
| 2020 | 12,900 | 92,800 | 25,000 | 80,700 |

## Land Data

| Front Foot | Type | Effective Frontage | Effective Depth | Influence Factor | Influence Code |
|---|---|---|---|---|---|
| 11.Regular Lot | | | | % | |
| 12.Delta Triangle | | | | % | |
| 13.Nabla Triangle | | | | % | |
| 14.Rear Land | | | | % | |
| 15.Class I Road | | | | % | |
| | | | | % | |
| | | | | % | |
| **Square Foot** | | **Square Feet** | | | |
| 16.Class II Road | 29 | 2,000 | | 75 % | 0 |
| 17.Municipal Rese | | | | % | |
| 18.Munic Sep Lago | | | | % | |
| 19.Gravel Pit | | | | % | |
| 20.Industrial Bas | | | | % | |
| | | | | % | |
| | | | | % | |
| **Fract. Acre** | | **Acreage/Sites** | | | |
| 21.Developed Pave | 21 | 0.31 | | 100 % | 0 |
| 22.Undev Paved (F | | | | % | |
| 23.Developed Grav | | | | % | |
| **Acres** | | | | % | |
| 24.Undev Gravel ( | | | | % | |
| 25.Comm Base Pave | | | | % | |
| 26.Comm Base Grav | | | | % | |
| 27.Backlot | | | | % | |
| 28.Rear Land | | | | % | |
| 29.Pavement | | | | % | |

**Total Acreage** 0.31

### Influence Codes

1.Unimproved
2.Excess Frtg
3.Topography
4.Size/Shape
5.Access
6.Restriction
7.Open Space
8.View/Environ
9.Fract Share
**Acres**
30.Utility R O W
31.Tillable
32.Pasture
33.Orchard
34.Softwood F&O
35.Mixed Wood F&O
36.Hardwood F&O
37.Softwood TG
38.Mixed Wood TG
39.Hardwood TG
40.Wasteland
41.Open Space
42.Mobile Home Si
43.Condo Site
44.Lot Improvemen
45.Subdivision Lo
46.Heavy Ind Sit

Inspection Witnessed By:

X Date

| No./Date | Description | Date Insp. |
|---|---|---|
| | | |
| | | |
| | | |

Notes:

Garage -5% for 1/4 attached, -15% for size obsol. during reval.

**Washburn**

# Washburn

Map Lot 004-012 | Account 174 | Location 48 CHURCH STREET | Card 1 Of 1 | 11/18/2020

| | | |
|---|---|---|
| Building Style | **4 Cape Cod** | |
| 1.Conv. | 5.Garrison | 9.Gambrel |
| 2.Ranch | 6.Salt Box | 10.Other |
| 3.R Ranch | 7.Contemp | 11.Split |
| 4.Cape | 8.Log | 12. |
| Dwelling Units | **1** | |
| Other Units | **0** | |
| Stories | **2 Two Story** | |
| 1.1 | 4.1.5 | 7. |
| 2.2 | 5.1.75 | 8. |
| 3.3 | 6.2.5 | 9. |
| Exterior Walls | **2 Vinyl/Aluminum** | |
| 1.Wood | 5.Stucco | 9.T-111 |
| 2.Vin/Al | 6.Brick | 10.Other |
| 3.Compos. | 7.Stone | 11. |
| 4.Asbestos | 8.Concrete | 12. |
| Roof Surface | **1 Asphalt Shingles** | |
| 1.Asphalt | 4.Composit | 7. |
| 2.Slate | 5.Wood | 8. |
| 3.Metal | 6.Other | 9. |
| SF Masonry Trim | **0** | |
| OPEN-3-CUSTOM | **0** | |
| OPEN-4-CUSTOM | **0** | |
| Year Built | **1970** | |
| Year Remodeled | **0** | |
| Foundation | **1 Concrete** | |
| 1.Concrete | 4.Wood | 7. |
| 2.C Block | 5.Slab | 8. |
| 3.Br/Stone | 6.Piers | 9. |
| Basement | **4 Full Basement** | |
| 1.1/4 Bmt | 4.Full Bmt | 7. |
| 2.1/2 Bmt | 5.None | 8. |
| 3.3/4 Bmt | 6. | 9.None |
| Bsmt Gar # Cars | **0** | |
| Wet Basement | **3 Wet Basement** | |
| 1.Dry | 4. | 7. |
| 2.Damp | 5. | 8. |
| 3.Wet | 6. | 9. |

| | | |
|---|---|---|
| SF Bsmt Living | **0** | |
| Fin Bsmt Grade | **0 0** | |
| OPEN 5 OPTIONAL | **0** | |
| Heat Type | **100%** | **1 Hot Water BB** |
| 1.HWBB | 5.FWA | 9.No Heat |
| 2.HWCI | 6.GravWA | 10. |
| 3.H Pump | 7.Electric | 11. |
| 4.Steam | 8.Fl/Wall | 12. |
| Cool Type | **0%** | **9 None** |
| 1.Refrig | 4.W&C Air | 7. |
| 2.Evapor | 5. | 8. |
| 3.H Pump | 6. | 9.None |
| Kitchen Style | **2 Typical** | |
| 1.Modern | 4.Obsolete | 7. |
| 2.Typical | 5. | 8. |
| 3.Old Type | 6. | 9.None |
| Bath(s) Style | **2 Typical Bath(s)** | |
| 1.Modern | 4.Obsolete | 7. |
| 2.Typical | 5. | 8. |
| 3.Old Type | 6. | 9.None |
| # Rooms | **6** | |
| # Bedrooms | **3** | |
| # Full Baths | **1** | |
| # Half Baths | **1** | |
| # Addn Fixtures | **0** | |
| # Fireplaces | **0** | |

TRIO Software
A Division of Harris Computer Systems

| | | |
|---|---|---|
| Layout | **1 Typical** | |
| 1.Typical | 4. | 7. |
| 2.Inadeq | 5. | 8. |
| 3.Poor | 6. | 9. |
| Attic | **9 None** | |
| 1.1/4 Fin | 4.Full Fin | 7. |
| 2.1/2 Fin | 5.Fl/Stair | 8. |
| 3.3/4 Fin | 6. | 9.None |
| Insulation | **4 Minimal** | |
| 1.Full | 4.Minimal | 7. |
| 2.Heavy | 5.Partial | 8. |
| 3.Capped | 6. | 9.None |
| Unfinished % | **0%** | |
| Grade & Factor | **2 Fair 110%** | |
| 1.E Grade | 4.B Grade | 7. |
| 2.D Grade | 5.A Grade | 8.SC Grade |
| 3.C Grade | 6.AA Grade | 9.Same |
| SQFT (Footprint) | **624** | |
| Condition | **5 Above Average** | |
| 1.Poor | 4.Avg | 7.V G |
| 2.Fair | 5.Avg+ | 8.Exc |
| 3.Avg- | 6.Good | 9.Same |
| Phys. % Good | **0%** | |
| Funct. % Good | **100%** | |
| Functional Code | **9 None** | |
| 1.Incomp | 4.Delap | 7.No Power |
| 2.O-Built | 5.Bsmt | 8.LongTerm |
| 3.Damage | 6.Common | 9.None |
| Econ. % Good | **100%** | |
| Economic Code | **None** | |
| 0.None | 3.No Power | 7. |
| 1.Location | 4.Generate | 8. |
| 2.Encroach | 9.None | 9. |
| Entrance Code | **3 Information Only** | |
| 1.Interior | 4.Vacant | 7. |
| 2.Refusal | 5.Estimate | 8. |
| 3.Informed | 6.Reviewed | 9. |
| Information Code | **1 Owner** | |
| 1.Owner | 4.Agent | 7. |
| 2.Relative | 5.Estimate | 8. |
| 3.Tenant | 6.Other | 9. |

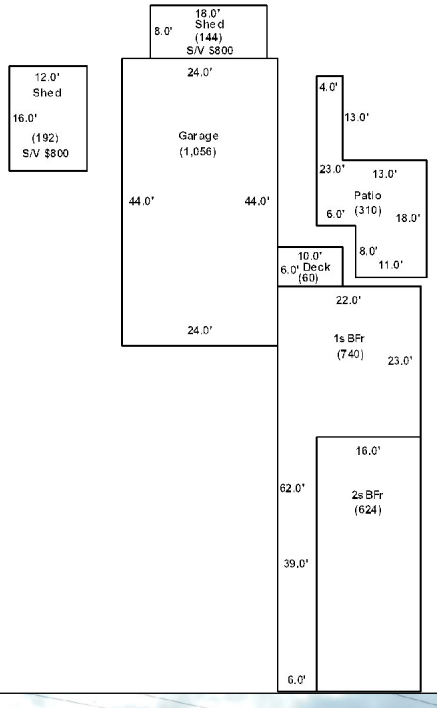


Date Inspected 9/01/2018

## Additions, Outbuildings & Improvements

| Type | Year | Units | Grade | Cond | Phys. | Funct. | Sound Value |
|---|---|---|---|---|---|---|---|
| 20 1 Story/Bsmt | 0 | 740 | 0 0 | 0 | 0 % | 0 % | |
| 68 Wood Deck | 2010 | 60 | 0 0 | 0 | 0 % | 0 % | |
| 23 Frame Garage | 1980 | 1056 | 0 0 | 0 | 0 % | 80 % | |
| 24 Frame Shed | 0 | | | | % | % | 800 |
| 24 Frame Shed | 0 | | | | % | % | 800 |
| 62 Patio | 2010 | 310 | 3 90 | 4 | 0 % | 100 % | |
| | | | | | % | % | |
| | | | | | % | % | |
| | | | | | % | % | |
| | | | | | % | % | |

1.One Story Fram
2.Two Story Fram
3.Three Story Fr
4.1 & 1/2 Story
5.1 & 3/4 Story
6.2 & 1/2 Story
21.Open Frame Por
22.Encl Frame Por
23.Frame Garage
24.Frame Shed
25.Frame Bay Wind
26.1SFr Overhang
27.Unfin Basement
28.Unfinished Att
29.Finished Attic

Map Lot 004-013 | Account 186 | Location 54 CHURCH STREET | Card 1 Of 1 | 11/18/2020

STODDARD, ELMER
STODDARD, CHARLOTTE B.
P.O. BOX 212

WASHBURN ME 04786
B5443P34

Previous Owner
Stoddard, E/O Deforest
c/o Elmer Stoddard
P.O. Box 576
Mapleton ME 04757
Sale Date: 9/13/2011

Inspection Witnessed By:

X Date

| No./Date | Description | Date Insp. |
|---|---|---|
| | | |
| | | |
| | | |

Notes:

* Corrected building information per interior inspection with owner. Dwelling now assessed at 100% with EP having been converted to living space.
*Remodel started in 2010, still in process during reval.

**Washburn**

## Property Data

Neighborhood **1 Neighborhood One**

Tree Growth Year **0**

1ST MORTGAGE **0**

2ND MORTGAGE **0**

Zone/Land Use **1 Residential**

Secondary Zone

Topography **1 Level**

| | | |
|---|---|---|
| 1.Level | 4.Below St | 7.LevelBog |
| 2.Rolling | 5.Low | 8. |
| 3.Above St | 6.Swampy | 9. |

Utilities **2 Public Water** **6 Septic System**

| | | |
|---|---|---|
| 1.Public | 4.Dr Well | 7.Cesspool |
| 2.Water | 5.Dug Well | 8. |
| 3.Sewer | 6.Septic | 9.None |

Street **1 Paved**

| | | |
|---|---|---|
| 1.Paved | 4.Proposed | 7. |
| 2.Semi Imp | 5.R/O/W | 8. |
| 3.Gravel | 6. | 9.None |

TG PLAN YEAR **0**

Tif District # **0**

## Sale Data

Sale Date **9/13/2011**

Price

Sale Type **2 Land & Buildings**

| | | |
|---|---|---|
| 1.Land | 4.Mobile | 7.C/I L&B |
| 2.L & B | 5.Other | 8. |
| 3.Building | 6.C/I Land | 9. |

Financing

| | | |
|---|---|---|
| 1.Convent | 4.Seller | 7. |
| 2.FHA/VA | 5.Private | 8. |
| 3.Assumed | 6.Cash | 9.Unknown |

Validity **2 Related Parties**

| | | |
|---|---|---|
| 1.Valid | 4.Split | 7.Renovate |
| 2.Related | 5.Partial | 8.Other |
| 3.Distress | 6.Exempt | 9. |

Verified **5 Public Record**

| | | |
|---|---|---|
| 1.Buyer | 4.Agent | 7.Family |
| 2.Seller | 5.Pub Rec | 8.Other |
| 3.Lender | 6.MLS | 9. |

## Assessment Record

| Year | Land | Buildings | Exempt | Total |
|---|---|---|---|---|
| 2007 | 5,300 | 27,400 | 0 | 32,700 |
| 2008 | 5,300 | 27,400 | 0 | 32,700 |
| 2009 | 5,300 | 27,400 | 0 | 32,700 |
| 2012 | 5,300 | 27,400 | 0 | 32,700 |
| 2013 | 6,800 | 27,400 | 0 | 34,200 |
| 2015 | 6,800 | 27,400 | 0 | 34,200 |
| 2018 | 6,800 | 27,400 | 0 | 34,200 |
| 2019 | 10,200 | 41,800 | 26,000 | 26,000 |
| 2020 | 10,200 | 50,100 | 31,000 | 29,300 |

## Land Data

| Front Foot | Type | Effective Frontage | Effective Depth | Influence Factor | Influence Code |
|---|---|---|---|---|---|
| 11.Regular Lot | | | | % | |
| 12.Delta Triangle | | | | % | |
| 13.Nabla Triangle | | | | % | |
| 14.Rear Land | | | | % | |
| 15.Class I Road | | | | % | |
| | | | | % | |
| | | | | % | |
| **Square Foot** | | **Square Feet** | | | |
| 16.Class II Road | | | | % | |
| 17.Municipal Rese | | | | % | |
| 18.Munic Sep Lago | | | | % | |
| 19.Gravel Pit | | | | % | |
| 20.Industrial Bas | | | | % | |
| | | | | % | |
| | | | | % | |
| **Fract. Acre** | | **Acreage/Sites** | | | |
| 21.Developed Pave | 21 | 0.38 | | 100 % | 0 |
| 22.Undev Paved (F | | | | % | |
| 23.Developed Grav | | | | % | |
| **Acres** | | | | % | |
| 24.Undev Gravel ( | | | | % | |
| 25.Comm Base Pave | | | | % | |
| 26.Comm Base Grav | | | | % | |
| 27.Backlot | | | | % | |
| 28.Rear Land | | | | % | |
| 29.Pavement | | | | % | |

**Total Acreage** 0.38

### Influence Codes

1.Unimproved
2.Excess Frtg
3.Topography
4.Size/Shape
5.Access
6.Restriction
7.Open Space
8.View/Environ
9.Fract Share
**Acres**
30.Utility R O W
31.Tillable
32.Pasture
33.Orchard
34.Softwood F&O
35.Mixed Wood F&O
36.Hardwood F&O
37.Softwood TG
38.Mixed Wood TG
39.Hardwood TG
40.Wasteland
41.Open Space
42.Mobile Home Si
43.Condo Site
44.Lot Improvemen
45.Subdivision Lo
46.Heavy Ind Sit

# Washburn

Map Lot 004-013 | Account 186 | Location 54 CHURCH STREET | Card 1 Of 1 | 11/18/2020

| | | | |
|---|---|---|---|
| Building Style | **4 Cape Cod** | | |
| 1.Conv. | 5.Garrison | 9.Gambrel | |
| 2.Ranch | 6.Salt Box | 10.Other | |
| 3.R Ranch | 7.Contemp | 11.Split | |
| 4.Cape | 8.Log | 12. | |
| Dwelling Units | **1** | | |
| Other Units | **0** | | |
| Stories | **4 One & 1/2 Story** | | |
| 1.1 | 4.1.5 | 7. | |
| 2.2 | 5.1.75 | 8. | |
| 3.3 | 6.2.5 | 9. | |
| Exterior Walls | **2 Vinyl/Aluminum** | | |
| 1.Wood | 5.Stucco | 9.T-111 | |
| 2.Vin/Al | 6.Brick | 10.Other | |
| 3.Compos. | 7.Stone | 11. | |
| 4.Asbestos | 8.Concrete | 12. | |
| Roof Surface | **1 Asphalt Shingles** | | |
| 1.Asphalt | 4.Composit | 7. | |
| 2.Slate | 5.Wood | 8. | |
| 3.Metal | 6.Other | 9. | |
| SF Masonry Trim | **0** | | |
| OPEN-3-CUSTOM | **0** | | |
| OPEN-4-CUSTOM | **0** | | |
| Year Built | **1900** | | |
| Year Remodeled | **2010** | | |
| Foundation | **6 Piers** | | |
| 1.Concrete | 4.Wood | 7. | |
| 2.C Block | 5.Slab | 8. | |
| 3.Br/Stone | 6.Piers | 9. | |
| Basement | **9 No Basement** | | |
| 1.1/4 Bmt | 4.Full Bmt | 7. | |
| 2.1/2 Bmt | 5.None | 8. | |
| 3.3/4 Bmt | 6. | 9.None | |
| Bsmt Gar # Cars | **0** | | |
| Wet Basement | **9 No Basement** | | |
| 1.Dry | 4. | 7. | |
| 2.Damp | 5. | 8. | |
| 3.Wet | 6. | 9. | |

| | | | |
|---|---|---|---|
| SF Bsmt Living | **0** | | |
| Fin Bsmt Grade | **0 0** | | |
| OPEN 5 OPTIONAL | **0** | | |
| Heat Type | **100%** | **8 Floor/Wall Unit** | |
| 1.HWBB | 5.FWA | 9.No Heat | |
| 2.HWCI | 6.GravWA | 10. | |
| 3.H Pump | 7.Electric | 11. | |
| 4.Steam | 8.Fl/Wall | 12. | |
| Cool Type | **0%** | **9 None** | |
| 1.Refrig | 4.W&C Air | 7. | |
| 2.Evapor | 5. | 8. | |
| 3.H Pump | 6. | 9.None | |
| Kitchen Style | **2 Typical** | | |
| 1.Modern | 4.Obsolete | 7. | |
| 2.Typical | 5. | 8. | |
| 3.Old Type | 6. | 9.None | |
| Bath(s) Style | **2 Typical Bath(s)** | | |
| 1.Modern | 4.Obsolete | 7. | |
| 2.Typical | 5. | 8. | |
| 3.Old Type | 6. | 9.None | |
| # Rooms | **5** | | |
| # Bedrooms | **2** | | |
| # Full Baths | **2** | | |
| # Half Baths | **0** | | |
| # Addn Fixtures | **0** | | |
| # Fireplaces | **0** | | |

TRIO Software
A Division of Harris Computer Systems

| | | | |
|---|---|---|---|
| Layout | **1 Typical** | | |
| 1.Typical | 4. | 7. | |
| 2.Inadeq | 5. | 8. | |
| 3.Poor | 6. | 9. | |
| Attic | **9 None** | | |
| 1.1/4 Fin | 4.Full Fin | 7. | |
| 2.1/2 Fin | 5.Fl/Stair | 8. | |
| 3.3/4 Fin | 6. | 9.None | |
| Insulation | **1 Full** | | |
| 1.Full | 4.Minimal | 7. | |
| 2.Heavy | 5.Partial | 8. | |
| 3.Capped | 6. | 9.None | |
| Unfinished % | **0%** | | |
| Grade & Factor | **2 Fair 110%** | | |
| 1.E Grade | 4.B Grade | 7. | |
| 2.D Grade | 5.A Grade | 8.SC Grade | |
| 3.C Grade | 6.AA Grade | 9.Same | |
| SQFT (Footprint) | **666** | | |
| Condition | **6 Good** | | |
| 1.Poor | 4.Avg | 7.V G | |
| 2.Fair | 5.Avg+ | 8.Exc | |
| 3.Avg- | 6.Good | 9.Same | |
| Phys. % Good | **0%** | | |
| Funct. % Good | **100%** | | |
| Functional Code | **9 None** | | |
| 1.Incomp | 4.Delap | 7.No Power | |
| 2.O-Built | 5.Bsmt | 8.LongTerm | |
| 3.Damage | 6.Common | 9.None | |
| Econ. % Good | **100%** | | |
| Economic Code | **None** | | |
| 0.None | 3.No Power | 7. | |
| 1.Location | 4.Generate | 8. | |
| 2.Encroach | 9.None | 9. | |
| Entrance Code | **3 Information Only** | | |
| 1.Interior | 4.Vacant | 7. | |
| 2.Refusal | 5.Estimate | 8. | |
| 3.Informed | 6.Reviewed | 9. | |
| Information Code | **1 Owner** | | |
| 1.Owner | 4.Agent | 7. | |
| 2.Relative | 5.Estimate | 8. | |
| 3.Tenant | 6.Other | 9. | |

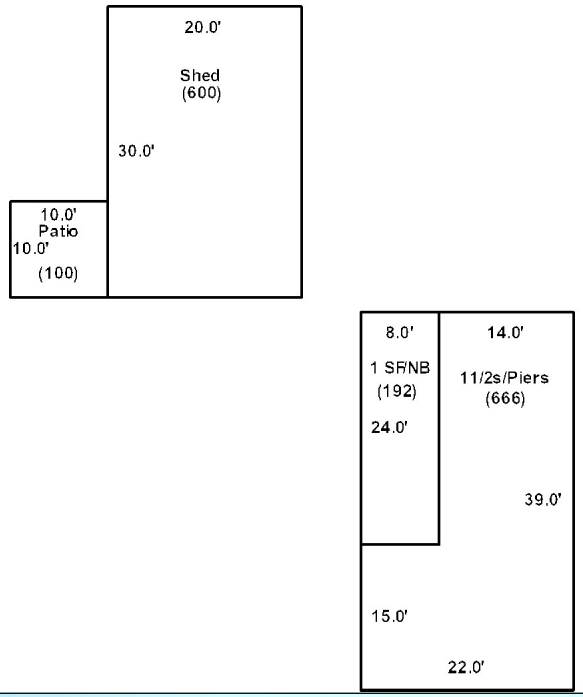


Date Inspected 9/01/2018

## Additions, Outbuildings & Improvements

| Type | Year | Units | Grade | Cond | Phys. | Funct. | Sound Value |
|---|---|---|---|---|---|---|---|
| 1 One Story Frame | 1900 | 192 | 9 100 | 9 | 0 % | 100 % | |
| 24 Frame Shed | 1950 | 600 | 0 0 | 0 | 0 % | 0 % | |
| 62 Patio | 1970 | 100 | 3 95 | 4 | 0 % | 100 % | |
| | | | | | % | % | |
| | | | | | % | % | |
| | | | | | % | % | |
| | | | | | % | % | |
| | | | | | % | % | |
| | | | | | % | % | |
| | | | | | % | % | |

1.One Story Fram
2.Two Story Fram
3.Three Story Fr
4.1 & 1/2 Story
5.1 & 3/4 Story
6.2 & 1/2 Story
21.Open Frame Por
22.Encl Frame Por
23.Frame Garage
24.Frame Shed
25.Frame Bay Wind
26.1SFr Overhang
27.Unfin Basement
28.Unfinished Att
29.Finished Attic

Map Lot 004-014 Account 945 Location 22 Hilt Street Card 1 Of 1 11/18/2020

Washburn Water & Sewer District

22 Hilt Street

Washburn ME

## Property Data

Neighborhood **1 Neighborhood One**

Tree Growth Year **0**

1ST MORTGAGE **0**

2ND MORTGAGE **0**

Zone/Land Use **1 Residential**

Secondary Zone

Topography **4 Below Street**

| | | |
|---|---|---|
| 1.Level | 4.Below St | 7.LevelBog |
| 2.Rolling | 5.Low | 8. |
| 3.Above St | 6.Swampy | 9. |

Utilities **2 Public Water** **3 Public Sewer**

| | | |
|---|---|---|
| 1.Public | 4.Dr Well | 7.Cesspool |
| 2.Water | 5.Dug Well | 8. |
| 3.Sewer | 6.Septic | 9.None |

Street **3 Gravel**

| | | |
|---|---|---|
| 1.Paved | 4.Proposed | 7. |
| 2.Semi Imp | 5.R/O/W | 8. |
| 3.Gravel | 6. | 9.None |

TG PLAN YEAR **0**

Tif District # **0**

## Sale Data

Sale Date **7/13/2009**

Price

Sale Type

| | | |
|---|---|---|
| 1.Land | 4.Mobile | 7.C/I L&B |
| 2.L & B | 5.Other | 8. |
| 3.Building | 6.C/I Land | 9. |

Financing

| | | |
|---|---|---|
| 1.Convent | 4.Seller | 7. |
| 2.FHA/VA | 5.Private | 8. |
| 3.Assumed | 6.Cash | 9.Unknown |

Validity

| | | |
|---|---|---|
| 1.Valid | 4.Split | 7.Renovate |
| 2.Related | 5.Partial | 8.Other |
| 3.Distress | 6.Exempt | 9. |

Verified

| | | |
|---|---|---|
| 1.Buyer | 4.Agent | 7.Family |
| 2.Seller | 5.Pub Rec | 8.Other |
| 3.Lender | 6.MLS | 9. |

## Assessment Record

| Year | Land | Buildings | Exempt | Total |
|---|---|---|---|---|
| 2007 | 7,192 | 19,000 | 26,192 | 0 |
| 2008 | 7,200 | 19,000 | 26,200 | 0 |
| 2009 | 6,900 | 519,000 | 525,900 | 0 |
| 2012 | 6,900 | 519,000 | 525,900 | 0 |
| 2013 | 9,000 | 519,000 | 528,000 | 0 |
| 2015 | 9,000 | 519,000 | 528,000 | 0 |
| 2018 | 9,000 | 519,000 | 528,000 | 0 |
| 2019 | 4,800 | 76,200 | 81,000 | 0 |
| 2020 | 4,800 | 75,400 | 80,200 | 0 |

## Land Data

| Front Foot | Type | Effective Frontage | Effective Depth | Influence Factor | Influence Code |
|---|---|---|---|---|---|
| 11.Regular Lot | | | | % | |
| 12.Delta Triangle | | | | % | |
| 13.Nabla Triangle | | | | % | |
| 14.Rear Land | | | | % | |
| 15.Class I Road | | | | % | |
| | | | | % | |
| | | | | % | |
| **Square Foot** | | **Square Feet** | | | |
| 16.Class II Road | 29 | 1,500 | | 100 % | 0 |
| 17.Municipal Rese | | | | % | |
| 18.Munic Sep Lago | | | | % | |
| 19.Gravel Pit | | | | % | |
| 20.Industrial Bas | | | | % | |
| | | | | % | |
| | | | | % | |
| **Fract. Acre** | | **Acreage/Sites** | | | |
| 21.Developed Pave | 32 | 2.00 | | 100 % | 0 |
| 22.Undev Paved (F | 40 | 3.50 | | 100 % | 0 |
| 23.Developed Grav | | | | % | |
| **Acres** | | | | % | |
| 24.Undev Gravel ( | | | | % | |
| 25.Comm Base Pave | | | | % | |
| 26.Comm Base Grav | | | | % | |
| 27.Backlot | | | | % | |
| 28.Rear Land | | | | % | |
| 29.Pavement | | | | % | |

**Total Acreage** 5.50

### Influence Codes

1.Unimproved
2.Excess Frtg
3.Topography
4.Size/Shape
5.Access
6.Restriction
7.Open Space
8.View/Environ
9.Fract Share

**Acres**

30.Utility R O W
31.Tillable
32.Pasture
33.Orchard
34.Softwood F&O
35.Mixed Wood F&O
36.Hardwood F&O
37.Softwood TG
38.Mixed Wood TG
39.Hardwood TG
40.Wasteland
41.Open Space
42.Mobile Home Si
43.Condo Site
44.Lot Improvemen
45.Subdivision Lo
46.Heavy Ind Sit

Inspection Witnessed By:

X Date

| No./Date | Description | Date Insp. |
|---|---|---|
| | | |
| | | |
| | | |

Notes:

*1sFr -15% for size obsol. during reval.

**Washburn**

# Washburn

Map Lot 004-014 | Account 945 | Location 22 Hilt Street | Card 1 Of 1 | 11/18/2020

| | | |
|---|---|---|
| Building Style **0** | | |
| 1.Conv. | 5.Garrison | 9.Gambrel |
| 2.Ranch | 6.Salt Box | 10.Other |
| 3.R Ranch | 7.Contemp | 11.Split |
| 4.Cape | 8.Log | 12. |
| Dwelling Units **0** | | |
| Other Units **0** | | |
| Stories **0** | | |
| 1.1 | 4.1.5 | 7. |
| 2.2 | 5.1.75 | 8. |
| 3.3 | 6.2.5 | 9. |
| Exterior Walls **0** | | |
| 1.Wood | 5.Stucco | 9.T-111 |
| 2.Vin/Al | 6.Brick | 10.Other |
| 3.Compos. | 7.Stone | 11. |
| 4.Asbestos | 8.Concrete | 12. |
| Roof Surface **0** | | |
| 1.Asphalt | 4.Composit | 7. |
| 2.Slate | 5.Wood | 8. |
| 3.Metal | 6.Other | 9. |
| SF Masonry Trim **0** | | |
| OPEN-3-CUSTOM **0** | | |
| OPEN-4-CUSTOM **0** | | |
| Year Built **0** | | |
| Year Remodeled **0** | | |
| Foundation **0** | | |
| 1.Concrete | 4.Wood | 7. |
| 2.C Block | 5.Slab | 8. |
| 3.Br/Stone | 6.Piers | 9. |
| Basement **0** | | |
| 1.1/4 Bmt | 4.Full Bmt | 7. |
| 2.1/2 Bmt | 5.None | 8. |
| 3.3/4 Bmt | 6. | 9.None |
| Bsmt Gar # Cars **0** | | |
| Wet Basement **0** | | |
| 1.Dry | 4. | 7. |
| 2.Damp | 5. | 8. |
| 3.Wet | 6. | 9. |

| | | |
|---|---|---|
| SF Bsmt Living **0** | | |
| Fin Bsmt Grade **0 0** | | |
| OPEN 5 OPTIONAL **0** | | |
| Heat Type **100%** **0** | | |
| 1.HWBB | 5.FWA | 9.No Heat |
| 2.HWCI | 6.GravWA | 10. |
| 3.H Pump | 7.Electric | 11. |
| 4.Steam | 8.Fl/Wall | 12. |
| Cool Type **0%** **9 None** | | |
| 1.Refrig | 4.W&C Air | 7. |
| 2.Evapor | 5. | 8. |
| 3.H Pump | 6. | 9.None |
| Kitchen Style **0** | | |
| 1.Modern | 4.Obsolete | 7. |
| 2.Typical | 5. | 8. |
| 3.Old Type | 6. | 9.None |
| Bath(s) Style **0** | | |
| 1.Modern | 4.Obsolete | 7. |
| 2.Typical | 5. | 8. |
| 3.Old Type | 6. | 9.None |
| # Rooms **0** | | |
| # Bedrooms **0** | | |
| # Full Baths **0** | | |
| # Half Baths **0** | | |
| # Addn Fixtures **0** | | |
| # Fireplaces **0** | | |

TRIO Software
A Division of Harris Computer Systems

| | | |
|---|---|---|
| Layout **0** | | |
| 1.Typical | 4. | 7. |
| 2.Inadeq | 5. | 8. |
| 3.Poor | 6. | 9. |
| Attic **0** | | |
| 1.1/4 Fin | 4.Full Fin | 7. |
| 2.1/2 Fin | 5.Fl/Stair | 8. |
| 3.3/4 Fin | 6. | 9.None |
| Insulation **0** | | |
| 1.Full | 4.Minimal | 7. |
| 2.Heavy | 5.Partial | 8. |
| 3.Capped | 6. | 9.None |
| Unfinished % **0%** | | |
| Grade & Factor **0 0%** | | |
| 1.E Grade | 4.B Grade | 7. |
| 2.D Grade | 5.A Grade | 8.SC Grade |
| 3.C Grade | 6.AA Grade | 9.Same |
| SQFT (Footprint) **0** | | |
| Condition **0** | | |
| 1.Poor | 4.Avg | 7.V G |
| 2.Fair | 5.Avg+ | 8.Exc |
| 3.Avg- | 6.Good | 9.Same |
| Phys. % Good **0%** | | |
| Funct. % Good **100%** | | |
| Functional Code **9 None** | | |
| 1.Incomp | 4.Delap | 7.No Power |
| 2.O-Built | 5.Bsmt | 8.LongTerm |
| 3.Damage | 6.Common | 9.None |
| Econ. % Good **100%** | | |
| Economic Code **None** | | |
| 0.None | 3.No Power | 7. |
| 1.Location | 4.Generate | 8. |
| 2.Encroach | 9.None | 9. |
| Entrance Code **5 Estimated** | | |
| 1.Interior | 4.Vacant | 7. |
| 2.Refusal | 5.Estimate | 8. |
| 3.Informed | 6.Reviewed | 9. |
| Information Code **5 Estimate** | | |
| 1.Owner | 4.Agent | 7. |
| 2.Relative | 5.Estimate | 8. |
| 3.Tenant | 6.Other | 9. |

Date Inspected 9/01/2018

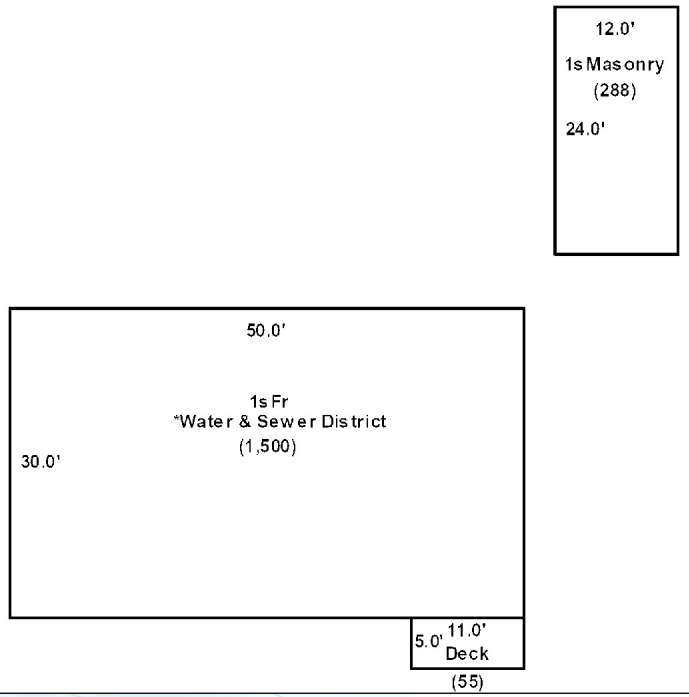

## Additions, Outbuildings & Improvements

| Type | Year | Units | Grade | Cond | Phys. | Funct. | Sound Value |
|---|---|---|---|---|---|---|---|
| 1 One Story Frame | 2000 | 1500 | 3 100 | 4 | 0 % | 85 % | |
| 68 Wood Deck | 2000 | 55 | 3 100 | 4 | 0 % | 100 % | |
| 1 One Story Frame | 1980 | 288 | 3 100 | 4 | 0 % | 100 % | |
| | | | | | % | % | |
| | | | | | % | % | |
| | | | | | % | % | |
| | | | | | % | % | |
| | | | | | % | % | |
| | | | | | % | % | |
| | | | | | % | % | |

1.One Story Fram
2.Two Story Fram
3.Three Story Fr
4.1 & 1/2 Story
5.1 & 3/4 Story
6.2 & 1/2 Story
21.Open Frame Por
22.Encl Frame Por
23.Frame Garage
24.Frame Shed
25.Frame Bay Wind
26.1SFr Overhang
27.Unfin Basement
28.Unfinished Att
29.Finished Attic

Map Lot 004-014/ON Account 175 Location 48 CHURCH STREET Card 1 Of 1 11/18/2020

BRAGG, LARRY W.
BRAGG, LINDA A.
P.O. BOX 503

WASHBURN ME

## Property Data

Neighborhood **1 Neighborhood One**

Tree Growth Year **0**

1ST MORTGAGE **0**

2ND MORTGAGE **0**

Zone/Land Use **1 Residential**

Secondary Zone

Topography **1 Level**

| | | |
|---|---|---|
| 1.Level | 4.Below St | 7.LevelBog |
| 2.Rolling | 5.Low | 8. |
| 3.Above St | 6.Swampy | 9. |

Utilities

| | | |
|---|---|---|
| 1.Public | 4.Dr Well | 7.Cesspool |
| 2.Water | 5.Dug Well | 8. |
| 3.Sewer | 6.Septic | 9.None |

Street **1 Paved**

| | | |
|---|---|---|
| 1.Paved | 4.Proposed | 7. |
| 2.Semi Imp | 5.R/O/W | 8. |
| 3.Gravel | 6. | 9.None |

TG PLAN YEAR **0**

Tif District # **0**

## Sale Data

Sale Date

Price

Sale Type **1 Land Only**

| | | |
|---|---|---|
| 1.Land | 4.Mobile | 7.C/I L&B |
| 2.L & B | 5.Other | 8. |
| 3.Building | 6.C/I Land | 9. |

Financing

| | | |
|---|---|---|
| 1.Convent | 4.Seller | 7. |
| 2.FHA/VA | 5.Private | 8. |
| 3.Assumed | 6.Cash | 9.Unknown |

Validity

| | | |
|---|---|---|
| 1.Valid | 4.Split | 7.Renovate |
| 2.Related | 5.Partial | 8.Other |
| 3.Distress | 6.Exempt | 9. |

Verified

| | | |
|---|---|---|
| 1.Buyer | 4.Agent | 7.Family |
| 2.Seller | 5.Pub Rec | 8.Other |
| 3.Lender | 6.MLS | 9. |

## Assessment Record

| Year | Land | Buildings | Exempt | Total |
|---|---|---|---|---|
| 2007 | 3,400 | 0 | 0 | 3,400 |
| 2008 | 3,400 | 0 | 0 | 3,400 |
| 2009 | 3,400 | 0 | 0 | 3,400 |
| 2012 | 3,400 | 0 | 0 | 3,400 |
| 2013 | 4,500 | 0 | 0 | 4,500 |
| 2015 | 4,500 | 0 | 0 | 4,500 |
| 2018 | 4,500 | 0 | 0 | 4,500 |
| 2019 | 0 | 18,300 | 0 | 18,300 |
| 2020 | 0 | 18,300 | 0 | 18,300 |

## Land Data

| Front Foot | Type | Effective Frontage | Effective Depth | Influence Factor | Influence Code |
|---|---|---|---|---|---|
| 11.Regular Lot | | | | % | |
| 12.Delta Triangle | | | | % | |
| 13.Nabla Triangle | | | | % | |
| 14.Rear Land | | | | % | |
| 15.Class I Road | | | | % | |
| | | | | % | |
| | | | | % | |
| **Square Foot** | | **Square Feet** | | | |
| 16.Class II Road | | | | % | |
| 17.Municipal Rese | | | | % | |
| 18.Munic Sep Lago | | | | % | |
| 19.Gravel Pit | | | | % | |
| 20.Industrial Bas | | | | % | |
| | | | | % | |
| | | | | % | |
| **Fract. Acre** | | **Acreage/Sites** | | | |
| 21.Developed Pave | | | | % | |
| 22.Undev Paved (F | | | | % | |
| 23.Developed Grav | | | | % | |
| **Acres** | | | | % | |
| 24.Undev Gravel ( | | | | % | |
| 25.Comm Base Pave | | | | % | |
| 26.Comm Base Grav | | | | % | |
| 27.Backlot | | | | % | |
| 28.Rear Land | | | | | |
| 29.Pavement | | | | | |

**Total Acreage** 0.00

### Influence Codes

1.Unimproved
2.Excess Frtg
3.Topography
4.Size/Shape
5.Access
6.Restriction
7.Open Space
8.View/Environ
9.Fract Share
**Acres**
30.Utility R O W
31.Tillable
32.Pasture
33.Orchard
34.Softwood F&O
35.Mixed Wood F&O
36.Hardwood F&O
37.Softwood TG
38.Mixed Wood TG
39.Hardwood TG
40.Wasteland
41.Open Space
42.Mobile Home Si
43.Condo Site
44.Lot Improvemen
45.Subdivision Lo
46.Heavy Ind Sit

Inspection Witnessed By:

X Date

| No./Date | Description | Date Insp. |
|---|---|---|
| | | |
| | | |
| | | |

Notes:
*Garage -15% for size obsol. during reval.

**Washburn**

# Washburn

Map Lot 004-014/ON | Account 175 | Location 48 CHURCH STREET | Card 1 Of 1 | 11/18/2020

| | | |
|---|---|---|
| Building Style **0** | | |
| 1.Conv. | 5.Garrison | 9.Gambrel |
| 2.Ranch | 6.Salt Box | 10.Other |
| 3.R Ranch | 7.Contemp | 11.Split |
| 4.Cape | 8.Log | 12. |
| Dwelling Units **0** | | |
| Other Units **0** | | |
| Stories **0** | | |
| 1.1 | 4.1.5 | 7. |
| 2.2 | 5.1.75 | 8. |
| 3.3 | 6.2.5 | 9. |
| Exterior Walls **0** | | |
| 1.Wood | 5.Stucco | 9.T-111 |
| 2.Vin/Al | 6.Brick | 10.Other |
| 3.Compos. | 7.Stone | 11. |
| 4.Asbestos | 8.Concrete | 12. |
| Roof Surface **0** | | |
| 1.Asphalt | 4.Composit | 7. |
| 2.Slate | 5.Wood | 8. |
| 3.Metal | 6.Other | 9. |
| SF Masonry Trim **0** | | |
| OPEN-3-CUSTOM **0** | | |
| OPEN-4-CUSTOM **0** | | |
| Year Built **0** | | |
| Year Remodeled **0** | | |
| Foundation **0** | | |
| 1.Concrete | 4.Wood | 7. |
| 2.C Block | 5.Slab | 8. |
| 3.Br/Stone | 6.Piers | 9. |
| Basement **0** | | |
| 1.1/4 Bmt | 4.Full Bmt | 7. |
| 2.1/2 Bmt | 5.None | 8. |
| 3.3/4 Bmt | 6. | 9.None |
| Bsmt Gar # Cars **0** | | |
| Wet Basement **0** | | |
| 1.Dry | 4. | 7. |
| 2.Damp | 5. | 8. |
| 3.Wet | 6. | 9. |

| | | |
|---|---|---|
| SF Bsmt Living **0** | | |
| Fin Bsmt Grade **0 0** | | |
| OPEN 5 OPTIONAL **0** | | |
| Heat Type **100%** **0** | | |
| 1.HWBB | 5.FWA | 9.No Heat |
| 2.HWCI | 6.GravWA | 10. |
| 3.H Pump | 7.Electric | 11. |
| 4.Steam | 8.Fl/Wall | 12. |
| Cool Type **0%** **9 None** | | |
| 1.Refrig | 4.W&C Air | 7. |
| 2.Evapor | 5. | 8. |
| 3.H Pump | 6. | 9.None |
| Kitchen Style **0** | | |
| 1.Modern | 4.Obsolete | 7. |
| 2.Typical | 5. | 8. |
| 3.Old Type | 6. | 9.None |
| Bath(s) Style **0** | | |
| 1.Modern | 4.Obsolete | 7. |
| 2.Typical | 5. | 8. |
| 3.Old Type | 6. | 9.None |
| # Rooms **0** | | |
| # Bedrooms **0** | | |
| # Full Baths **0** | | |
| # Half Baths **0** | | |
| # Addn Fixtures **0** | | |
| # Fireplaces **0** | | |

TRIO Software
A Division of Harris Computer Systems

| | | |
|---|---|---|
| Layout **0** | | |
| 1.Typical | 4. | 7. |
| 2.Inadeq | 5. | 8. |
| 3.Poor | 6. | 9. |
| Attic **0** | | |
| 1.1/4 Fin | 4.Full Fin | 7. |
| 2.1/2 Fin | 5.Fl/Stair | 8. |
| 3.3/4 Fin | 6. | 9.None |
| Insulation **0** | | |
| 1.Full | 4.Minimal | 7. |
| 2.Heavy | 5.Partial | 8. |
| 3.Capped | 6. | 9.None |
| Unfinished % **0%** | | |
| Grade & Factor **0 0%** | | |
| 1.E Grade | 4.B Grade | 7. |
| 2.D Grade | 5.A Grade | 8.SC Grade |
| 3.C Grade | 6.AA Grade | 9.Same |
| SQFT (Footprint) **0** | | |
| Condition **0** | | |
| 1.Poor | 4.Avg | 7.V G |
| 2.Fair | 5.Avg+ | 8.Exc |
| 3.Avg- | 6.Good | 9.Same |
| Phys. % Good **0%** | | |
| Funct. % Good **100%** | | |
| Functional Code **9 None** | | |
| 1.Incomp | 4.Delap | 7.No Power |
| 2.O-Built | 5.Bsmt | 8.LongTerm |
| 3.Damage | 6.Common | 9.None |
| Econ. % Good **100%** | | |
| Economic Code **None** | | |
| 0.None | 3.No Power | 7. |
| 1.Location | 4.Generate | 8. |
| 2.Encroach | 9.None | 9. |
| Entrance Code **5 Estimated** | | |
| 1.Interior | 4.Vacant | 7. |
| 2.Refusal | 5.Estimate | 8. |
| 3.Informed | 6.Reviewed | 9. |
| Information Code **5 Estimate** | | |
| 1.Owner | 4.Agent | 7. |
| 2.Relative | 5.Estimate | 8. |
| 3.Tenant | 6.Other | 9. |

Date Inspected 9/01/2018

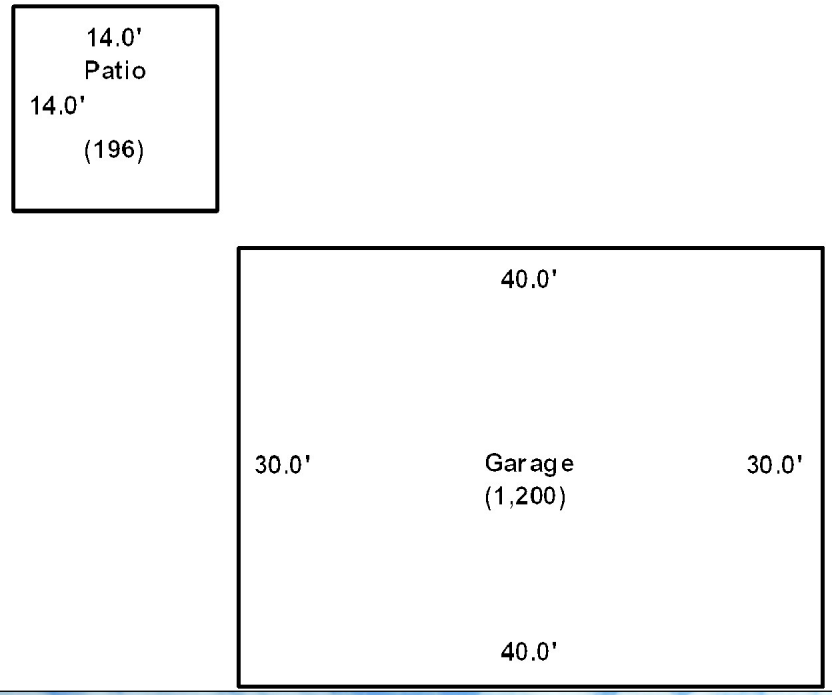

## Additions, Outbuildings & Improvements

| Type | Year | Units | Grade | Cond | Phys. | Funct. | Sound Value |
|---|---|---|---|---|---|---|---|
| 23 Frame Garage | 2010 | 1200 | 3 105 | 4 | 0 % | 85 % | |
| 62 Patio | 2010 | 196 | 3 90 | 4 | 0 % | 100 % | |
| | | | | | % | % | |
| | | | | | % | % | |
| | | | | | % | % | |
| | | | | | % | % | |
| | | | | | % | % | |
| | | | | | % | % | |
| | | | | | % | % | |
| | | | | | % | % | |

1.One Story Fram
2.Two Story Fram
3.Three Story Fr
4.1 & 1/2 Story
5.1 & 3/4 Story
6.2 & 1/2 Story
21.Open Frame Por
22.Encl Frame Por
23.Frame Garage
24.Frame Shed
25.Frame Bay Wind
26.1SFr Overhang
27.Unfin Basement
28.Unfinished Att
29.Finished Attic

Map Lot 004-015 Account 348 Location 34 HILT STREET Card 1 Of 1 11/18/2020

PELLETIER, FREDERICK N.

P.O. Box 438

Washburn ME 04786
B5860P236

Previous Owner
HARRIS, ROBERT S.
31 W. CLEARVIEW DRIVE

SHREWSBURY PA 17361
Sale Date: 1/15/2019

Inspection Witnessed By:

X Date

| No./Date | Description | Date Insp. |
|---|---|---|
| | | |
| | | |
| | | |

Notes:

-5% off baselot due to ROW for town on property. Dwelling assessed at 85% functional at time of reval due to foundation eroding and roof leaking in multiple spots. Both bay windows and EP/OP assessed at 90% functional due to foundation kicking out.

**Washburn**

## Property Data

Neighborhood **1 Neighborhood One**

Tree Growth Year **0**

1ST MORTGAGE **0**

2ND MORTGAGE **0**

Zone/Land Use **1 Residential**

Secondary Zone

Topography **1 Level**

| | | |
|---|---|---|
| 1.Level | 4.Below St | 7.LevelBog |
| 2.Rolling | 5.Low | 8. |
| 3.Above St | 6.Swampy | 9. |

Utilities **3 Public Sewer** **4 Drilled Well**

| | | |
|---|---|---|
| 1.Public | 4.Dr Well | 7.Cesspool |
| 2.Water | 5.Dug Well | 8. |
| 3.Sewer | 6.Septic | 9.None |

Street **1 Paved**

| | | |
|---|---|---|
| 1.Paved | 4.Proposed | 7. |
| 2.Semi Imp | 5.R/O/W | 8. |
| 3.Gravel | 6. | 9.None |

TG PLAN YEAR **0**

Tif District # **0**

## Sale Data

Sale Date **1/15/2019**

Price

Sale Type **2 Land & Buildings**

| | | |
|---|---|---|
| 1.Land | 4.Mobile | 7.C/I L&B |
| 2.L & B | 5.Other | 8. |
| 3.Building | 6.C/I Land | 9. |

Financing **1 Conventional**

| | | |
|---|---|---|
| 1.Convent | 4.Seller | 7. |
| 2.FHA/VA | 5.Private | 8. |
| 3.Assumed | 6.Cash | 9.Unknown |

Validity **2 Related Parties**

| | | |
|---|---|---|
| 1.Valid | 4.Split | 7.Renovate |
| 2.Related | 5.Partial | 8.Other |
| 3.Distress | 6.Exempt | 9. |

Verified **5 Public Record**

| | | |
|---|---|---|
| 1.Buyer | 4.Agent | 7.Family |
| 2.Seller | 5.Pub Rec | 8.Other |
| 3.Lender | 6.MLS | 9. |

## Assessment Record

| Year | Land | Buildings | Exempt | Total |
|---|---|---|---|---|
| 2007 | 6,600 | 34,700 | 0 | 41,300 |
| 2008 | 6,600 | 34,700 | 0 | 41,300 |
| 2009 | 6,600 | 53,300 | 0 | 59,900 |
| 2012 | 6,600 | 53,300 | 0 | 59,900 |
| 2013 | 8,600 | 53,300 | 0 | 61,900 |
| 2015 | 8,600 | 53,300 | 0 | 61,900 |
| 2018 | 8,600 | 53,300 | 0 | 61,900 |
| 2019 | 15,800 | 53,700 | 20,000 | 49,500 |
| 2020 | 15,800 | 53,600 | 25,000 | 44,400 |

## Land Data

| Front Foot | Type | Effective Frontage | Effective Depth | Influence Factor | Influence Code |
|---|---|---|---|---|---|
| 11.Regular Lot | | | | % | |
| 12.Delta Triangle | | | | % | |
| 13.Nabla Triangle | | | | % | |
| 14.Rear Land | | | | % | |
| 15.Class I Road | | | | % | |
| | | | | % | |
| | | | | % | |
| **Square Foot** | | **Square Feet** | | | |
| 16.Class II Road | | | | % | |
| 17.Municipal Rese | | | | % | |
| 18.Munic Sep Lago | | | | % | |
| 19.Gravel Pit | | | | % | |
| 20.Industrial Bas | | | | % | |
| | | | | % | |
| | | | | % | |
| **Fract. Acre** | | **Acreage/Sites** | | | |
| 21.Developed Pave | 21 | 1.00 | 95 | % | 5 |
| 22.Undev Paved (F | 28 | 0.20 | 100 | % | 0 |
| 23.Developed Grav | | | | % | |
| **Acres** | | | | % | |
| 24.Undev Gravel ( | | | | % | |
| 25.Comm Base Pave | | | | % | |
| 26.Comm Base Grav | | | | % | |
| 27.Backlot | | | | % | |
| 28.Rear Land | | | | % | |
| 29.Pavement | | | | % | |

**Total Acreage** 1.20

### Influence Codes

1.Unimproved
2.Excess Frtg
3.Topography
4.Size/Shape
5.Access
6.Restriction
7.Open Space
8.View/Environ
9.Fract Share
**Acres**
30.Utility R O W
31.Tillable
32.Pasture
33.Orchard
34.Softwood F&O
35.Mixed Wood F&O
36.Hardwood F&O
37.Softwood TG
38.Mixed Wood TG
39.Hardwood TG
40.Wasteland
41.Open Space
42.Mobile Home Si
43.Condo Site
44.Lot Improvemen
45.Subdivision Lo
46.Heavy Ind Sit

# Washburn

Map Lot 004-015 | Account 348 | Location 34 HILT STREET | Card 1 Of 1 | 11/18/2020

| | | | |
|---|---|---|---|
| Building Style | **1 Conventional** | | |
| 1.Conv. | 5.Garrison | 9.Gambrel | |
| 2.Ranch | 6.Salt Box | 10.Other | |
| 3.R Ranch | 7.Contemp | 11.Split | |
| 4.Cape | 8.Log | 12. | |
| Dwelling Units | **1** | | |
| Other Units | **0** | | |
| Stories | **4 One & 1/2 Story** | | |
| 1.1 | 4.1.5 | 7. | |
| 2.2 | 5.1.75 | 8. | |
| 3.3 | 6.2.5 | 9. | |
| Exterior Walls | **2 Vinyl/Aluminum** | | |
| 1.Wood | 5.Stucco | 9.T-111 | |
| 2.Vin/Al | 6.Brick | 10.Other | |
| 3.Compos. | 7.Stone | 11. | |
| 4.Asbestos | 8.Concrete | 12. | |
| Roof Surface | **3 Sheet Metal** | | |
| 1.Asphalt | 4.Composit | 7. | |
| 2.Slate | 5.Wood | 8. | |
| 3.Metal | 6.Other | 9. | |
| SF Masonry Trim | **0** | | |
| OPEN-3-CUSTOM | **0** | | |
| OPEN-4-CUSTOM | **0** | | |
| Year Built | **1900** | | |
| Year Remodeled | **1995** | | |
| Foundation | **1 Concrete** | | |
| 1.Concrete | 4.Wood | 7. | |
| 2.C Block | 5.Slab | 8. | |
| 3.Br/Stone | 6.Piers | 9. | |
| Basement | **4 Full Basement** | | |
| 1.1/4 Bmt | 4.Full Bmt | 7. | |
| 2.1/2 Bmt | 5.None | 8. | |
| 3.3/4 Bmt | 6. | 9.None | |
| Bsmt Gar # Cars | **0** | | |
| Wet Basement | **2 Damp Basement** | | |
| 1.Dry | 4. | 7. | |
| 2.Damp | 5. | 8. | |
| 3.Wet | 6. | 9. | |

| | | | |
|---|---|---|---|
| SF Bsmt Living | **0** | | |
| Fin Bsmt Grade | **0 0** | | |
| OPEN 5 OPTIONAL | **0** | | |
| Heat Type | **100%** | **5 Forced Warm Air** | |
| 1.HWBB | 5.FWA | 9.No Heat | |
| 2.HWCI | 6.GravWA | 10. | |
| 3.H Pump | 7.Electric | 11. | |
| 4.Steam | 8.Fl/Wall | 12. | |
| Cool Type | **0%** | **9 None** | |
| 1.Refrig | 4.W&C Air | 7. | |
| 2.Evapor | 5. | 8. | |
| 3.H Pump | 6. | 9.None | |
| Kitchen Style | **2 Typical** | | |
| 1.Modern | 4.Obsolete | 7. | |
| 2.Typical | 5. | 8. | |
| 3.Old Type | 6. | 9.None | |
| Bath(s) Style | **2 Typical Bath(s)** | | |
| 1.Modern | 4.Obsolete | 7. | |
| 2.Typical | 5. | 8. | |
| 3.Old Type | 6. | 9.None | |
| # Rooms | **7** | | |
| # Bedrooms | **4** | | |
| # Full Baths | **2** | | |
| # Half Baths | **0** | | |
| # Addn Fixtures | **0** | | |
| # Fireplaces | **0** | | |

TRIO Software
A Division of Harris Computer Systems

| | | | |
|---|---|---|---|
| Layout | **1 Typical** | | |
| 1.Typical | 4. | 7. | |
| 2.Inadeq | 5. | 8. | |
| 3.Poor | 6. | 9. | |
| Attic | **9 None** | | |
| 1.1/4 Fin | 4.Full Fin | 7. | |
| 2.1/2 Fin | 5.Fl/Stair | 8. | |
| 3.3/4 Fin | 6. | 9.None | |
| Insulation | **1 Full** | | |
| 1.Full | 4.Minimal | 7. | |
| 2.Heavy | 5.Partial | 8. | |
| 3.Capped | 6. | 9.None | |
| Unfinished % | **0%** | | |
| Grade & Factor | **2 Fair 110%** | | |
| 1.E Grade | 4.B Grade | 7. | |
| 2.D Grade | 5.A Grade | 8.SC Grade | |
| 3.C Grade | 6.AA Grade | 9.Same | |
| SQFT (Footprint) | **1092** | | |
| Condition | **5 Above Average** | | |
| 1.Poor | 4.Avg | 7.V G | |
| 2.Fair | 5.Avg+ | 8.Exc | |
| 3.Avg- | 6.Good | 9.Same | |
| Phys. % Good | **0%** | | |
| Funct. % Good | **85%** | | |
| Functional Code | **4 Delapidation** | | |
| 1.Incomp | 4.Delap | 7.No Power | |
| 2.O-Built | 5.Bsmt | 8.LongTerm | |
| 3.Damage | 6.Common | 9.None | |
| Econ. % Good | **100%** | | |
| Economic Code | **None** | | |
| 0.None | 3.No Power | 7. | |
| 1.Location | 4.Generate | 8. | |
| 2.Encroach | 9.None | 9. | |
| Entrance Code | **3 Information Only** | | |
| 1.Interior | 4.Vacant | 7. | |
| 2.Refusal | 5.Estimate | 8. | |
| 3.Informed | 6.Reviewed | 9. | |
| Information Code | **1 Owner** | | |
| 1.Owner | 4.Agent | 7. | |
| 2.Relative | 5.Estimate | 8. | |
| 3.Tenant | 6.Other | 9. | |

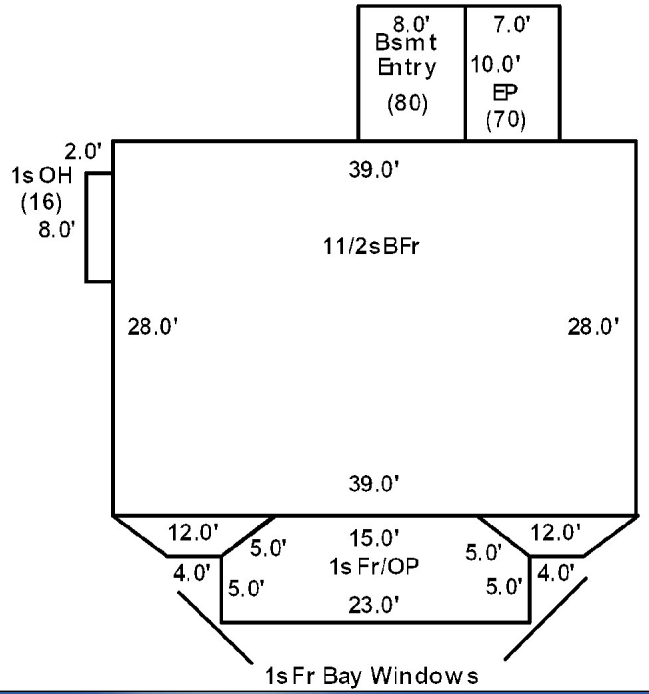


Date Inspected 9/01/2018

## Additions, Outbuildings & Improvements

| Type | Year | Units | Grade | Cond | Phys. | Funct. | Sound Value |
|---|---|---|---|---|---|---|---|
| 25 Frame Bay | 1900 | 24 | 2 105 | 5 | 0 % | 90 % | |
| 25 Frame Bay | 1900 | 24 | 2 105 | 5 | 0 % | 90 % | |
| 21 Open Frame | 1995 | 172 | 2 105 | 4 | 0 % | 90 % | |
| 22 Encl Frame Porch | 1995 | 172 | 2 105 | 4 | 0 % | 90 % | |
| 26 1SFr Overhang | 1995 | 16 | 2 110 | 4 | 0 % | 90 % | |
| 40 Basement Entry | 1995 | 80 | 2 100 | 1 | 0 % | 100 % | |
| 22 Encl Frame Porch | 1995 | 70 | 2 110 | 3 | 0 % | 100 % | |
| | | | | | % | % | |
| | | | | | % | % | |
| | | | | | % | % | |

1.One Story Fram
2.Two Story Fram
3.Three Story Fr
4.1 & 1/2 Story
5.1 & 3/4 Story
6.2 & 1/2 Story
21.Open Frame Por
22.Encl Frame Por
23.Frame Garage
24.Frame Shed
25.Frame Bay Wind
26.1SFr Overhang
27.Unfin Basement
28.Unfinished Att
29.Finished Attic

Map Lot 004-016 Account 583 Location 35 HILT STREET Card 1 Of 1 11/18/2020

KENNEY, STEPHEN B.
KENNEY, APRIL L.
1691 STATE ROAD

MAPLETON ME 04757
B3888P309

## Property Data

Neighborhood **1 Neighborhood One**

Tree Growth Year **0**

1ST MORTGAGE **0**

2ND MORTGAGE **0**

Zone/Land Use **1 Residential**

Secondary Zone

Topography **1 Level**

| | | |
|---|---|---|
| 1.Level | 4.Below St | 7.LevelBog |
| 2.Rolling | 5.Low | 8. |
| 3.Above St | 6.Swampy | 9. |

Utilities **4 Drilled Well** **6 Septic System**

| | | |
|---|---|---|
| 1.Public | 4.Dr Well | 7.Cesspool |
| 2.Water | 5.Dug Well | 8. |
| 3.Sewer | 6.Septic | 9.None |

Street **1 Paved**

| | | |
|---|---|---|
| 1.Paved | 4.Proposed | 7. |
| 2.Semi Imp | 5.R/O/W | 8. |
| 3.Gravel | 6. | 9.None |

TG PLAN YEAR **0**

Tif District # **0**

## Sale Data

Sale Date

Price

Sale Type **2 Land & Buildings**

| | | |
|---|---|---|
| 1.Land | 4.Mobile | 7.C/I L&B |
| 2.L & B | 5.Other | 8. |
| 3.Building | 6.C/I Land | 9. |

Financing

| | | |
|---|---|---|
| 1.Convent | 4.Seller | 7. |
| 2.FHA/VA | 5.Private | 8. |
| 3.Assumed | 6.Cash | 9.Unknown |

Validity

| | | |
|---|---|---|
| 1.Valid | 4.Split | 7.Renovate |
| 2.Related | 5.Partial | 8.Other |
| 3.Distress | 6.Exempt | 9. |

Verified **5 Public Record**

| | | |
|---|---|---|
| 1.Buyer | 4.Agent | 7.Family |
| 2.Seller | 5.Pub Rec | 8.Other |
| 3.Lender | 6.MLS | 9. |

## Assessment Record

| Year | Land | Buildings | Exempt | Total |
|---|---|---|---|---|
| 2007 | 4,200 | 38,600 | 0 | 42,800 |
| 2008 | 4,200 | 38,600 | 0 | 42,800 |
| 2009 | 4,200 | 38,600 | 0 | 42,800 |
| 2012 | 3,200 | 38,600 | 0 | 41,800 |
| 2013 | 4,100 | 38,600 | 0 | 42,700 |
| 2015 | 4,100 | 38,600 | 0 | 42,700 |
| 2018 | 4,100 | 38,600 | 0 | 42,700 |
| 2019 | 8,100 | 29,500 | 0 | 37,600 |
| 2020 | 8,100 | 29,500 | 0 | 37,600 |

## Land Data

| Front Foot | Type | Effective Frontage | Effective Depth | Influence Factor | Influence Code |
|---|---|---|---|---|---|
| 11.Regular Lot | | | | % | |
| 12.Delta Triangle | | | | % | |
| 13.Nabla Triangle | | | | % | |
| 14.Rear Land | | | | % | |
| 15.Class I Road | | | | % | |
| | | | | % | |
| | | | | % | |
| **Square Foot** | | **Square Feet** | | | |
| 16.Class II Road | | | | % | |
| 17.Municipal Rese | | | | % | |
| 18.Munic Sep Lago | | | | % | |
| 19.Gravel Pit | | | | % | |
| 20.Industrial Bas | | | | % | |
| | | | | % | |
| | | | | % | |
| **Fract. Acre** | | **Acreage/Sites** | | | |
| 21.Developed Pave | 21 | 0.24 | | 100 % | 0 |
| 22.Undev Paved (F | | | | % | |
| 23.Developed Grav | | | | % | |
| **Acres** | | | | % | |
| 24.Undev Gravel ( | | | | % | |
| 25.Comm Base Pave | | | | % | |
| 26.Comm Base Grav | | | | % | |
| 27.Backlot | | | | % | |
| 28.Rear Land | | | | % | |
| 29.Pavement | | | | % | |

**Total Acreage** 0.24

### Influence Codes

1.Unimproved
2.Excess Frtg
3.Topography
4.Size/Shape
5.Access
6.Restriction
7.Open Space
8.View/Environ
9.Fract Share
**Acres**
30.Utility R O W
31.Tillable
32.Pasture
33.Orchard
34.Softwood F&O
35.Mixed Wood F&O
36.Hardwood F&O
37.Softwood TG
38.Mixed Wood TG
39.Hardwood TG
40.Wasteland
41.Open Space
42.Mobile Home Si
43.Condo Site
44.Lot Improvemen
45.Subdivision Lo
46.Heavy Ind Sit

Inspection Witnessed By:

X Date

| No./Date | Description | Date Insp. |
|---|---|---|
| | | |
| | | |
| | | |

Notes:
*Interior gutted at time of reval.

**Washburn**

# Washburn

Map Lot 004-016 | Account 583 | Location 35 HILT STREET | Card 1 Of 1 | 11/18/2020

| | | | |
|---|---|---|---|
| Building Style | **1 Conventional** | | |
| 1.Conv. | 5.Garrison | 9.Gambrel | |
| 2.Ranch | 6.Salt Box | 10.Other | |
| 3.R Ranch | 7.Contemp | 11.Split | |
| 4.Cape | 8.Log | 12. | |
| Dwelling Units | **1** | | |
| Other Units | **0** | | |
| Stories | **4 One & 1/2 Story** | | |
| 1.1 | 4.1.5 | 7. | |
| 2.2 | 5.1.75 | 8. | |
| 3.3 | 6.2.5 | 9. | |
| Exterior Walls | **4 Asbestos Siding** | | |
| 1.Wood | 5.Stucco | 9.T-111 | |
| 2.Vin/Al | 6.Brick | 10.Other | |
| 3.Compos. | 7.Stone | 11. | |
| 4.Asbestos | 8.Concrete | 12. | |
| Roof Surface | **3 Sheet Metal** | | |
| 1.Asphalt | 4.Composit | 7. | |
| 2.Slate | 5.Wood | 8. | |
| 3.Metal | 6.Other | 9. | |
| SF Masonry Trim | **0** | | |
| OPEN-3-CUSTOM | **0** | | |
| OPEN-4-CUSTOM | **0** | | |
| Year Built | **1900** | | |
| Year Remodeled | **1950** | | |
| Foundation | **1 Concrete** | | |
| 1.Concrete | 4.Wood | 7. | |
| 2.C Block | 5.Slab | 8. | |
| 3.Br/Stone | 6.Piers | 9. | |
| Basement | **4 Full Basement** | | |
| 1.1/4 Bmt | 4.Full Bmt | 7. | |
| 2.1/2 Bmt | 5.None | 8. | |
| 3.3/4 Bmt | 6. | 9.None | |
| Bsmt Gar # Cars | **0** | | |
| Wet Basement | **1 Dry Basement** | | |
| 1.Dry | 4. | 7. | |
| 2.Damp | 5. | 8. | |
| 3.Wet | 6. | 9. | |

| | | | |
|---|---|---|---|
| SF Bsmt Living | **0** | | |
| Fin Bsmt Grade | **0 0** | | |
| OPEN 5 OPTIONAL | **0** | | |
| Heat Type | **100%** | **5 Forced Warm Air** | |
| 1.HWBB | 5.FWA | 9.No Heat | |
| 2.HWCI | 6.GravWA | 10. | |
| 3.H Pump | 7.Electric | 11. | |
| 4.Steam | 8.Fl/Wall | 12. | |
| Cool Type | **0%** | **9 None** | |
| 1.Refrig | 4.W&C Air | 7. | |
| 2.Evapor | 5. | 8. | |
| 3.H Pump | 6. | 9.None | |
| Kitchen Style | **2 Typical** | | |
| 1.Modern | 4.Obsolete | 7. | |
| 2.Typical | 5. | 8. | |
| 3.Old Type | 6. | 9.None | |
| Bath(s) Style | **2 Typical Bath(s)** | | |
| 1.Modern | 4.Obsolete | 7. | |
| 2.Typical | 5. | 8. | |
| 3.Old Type | 6. | 9.None | |
| # Rooms | **5** | | |
| # Bedrooms | **3** | | |
| # Full Baths | **1** | | |
| # Half Baths | **0** | | |
| # Addn Fixtures | **0** | | |
| # Fireplaces | **0** | | |

TRIO Software
A Division of Harris Computer Systems

| | | | |
|---|---|---|---|
| Layout | **1 Typical** | | |
| 1.Typical | 4. | 7. | |
| 2.Inadeq | 5. | 8. | |
| 3.Poor | 6. | 9. | |
| Attic | **9 None** | | |
| 1.1/4 Fin | 4.Full Fin | 7. | |
| 2.1/2 Fin | 5.Fl/Stair | 8. | |
| 3.3/4 Fin | 6. | 9.None | |
| Insulation | **4 Minimal** | | |
| 1.Full | 4.Minimal | 7. | |
| 2.Heavy | 5.Partial | 8. | |
| 3.Capped | 6. | 9.None | |
| Unfinished % | **0%** | | |
| Grade & Factor | **2 Fair 110%** | | |
| 1.E Grade | 4.B Grade | 7. | |
| 2.D Grade | 5.A Grade | 8.SC Grade | |
| 3.C Grade | 6.AA Grade | 9.Same | |
| SQFT (Footprint) | **1134** | | |
| Condition | **3 Below Average** | | |
| 1.Poor | 4.Avg | 7.V G | |
| 2.Fair | 5.Avg+ | 8.Exc | |
| 3.Avg- | 6.Good | 9.Same | |
| Phys. % Good | **0%** | | |
| Funct. % Good | **75%** | | |
| Functional Code | **4 Delapidation** | | |
| 1.Incomp | 4.Delap | 7.No Power | |
| 2.O-Built | 5.Bsmt | 8.LongTerm | |
| 3.Damage | 6.Common | 9.None | |
| Econ. % Good | **100%** | | |
| Economic Code | **None** | | |
| 0.None | 3.No Power | 7. | |
| 1.Location | 4.Generate | 8. | |
| 2.Encroach | 9.None | 9. | |
| Entrance Code | **5 Estimated** | | |
| 1.Interior | 4.Vacant | 7. | |
| 2.Refusal | 5.Estimate | 8. | |
| 3.Informed | 6.Reviewed | 9. | |
| Information Code | **5 Estimate** | | |
| 1.Owner | 4.Agent | 7. | |
| 2.Relative | 5.Estimate | 8. | |
| 3.Tenant | 6.Other | 9. | |

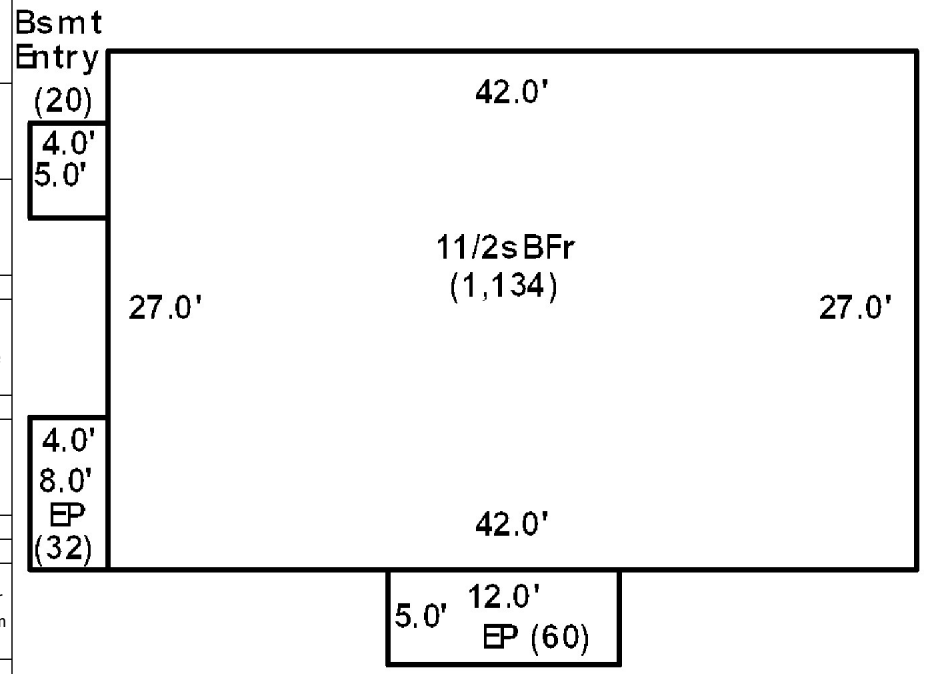

Date Inspected 9/01/2018

## Additions, Outbuildings & Improvements

| Type | Year | Units | Grade | Cond | Phys. | Funct. | Sound Value |
|---|---|---|---|---|---|---|---|
| 22 Encl Frame Porch | 1950 | 60 | 0 0 | 0 | 0 % | 0 % | |
| 40 Basement Entry | 1950 | 20 | 0 0 | 0 | 0 % | 0 % | |
| 22 Encl Frame Porch | 1950 | 32 | 0 0 | 0 | 0 % | 0 % | |
| | | | | | % | % | |
| | | | | | % | % | |
| | | | | | % | % | |
| | | | | | % | % | |
| | | | | | % | % | |
| | | | | | % | % | |
| | | | | | % | % | |

1.One Story Fram
2.Two Story Fram
3.Three Story Fr
4.1 & 1/2 Story
5.1 & 3/4 Story
6.2 & 1/2 Story
21.Open Frame Por
22.Encl Frame Por
23.Frame Garage
24.Frame Shed
25.Frame Bay Wind
26.1SFr Overhang
27.Unfin Basement
28.Unfinished Att
29.Finished Attic

Map Lot 004-017 Account 213 Location HILT STREET Card 1 Of 1 11/18/2020

STEVENS, MICHAEL

P.O. BOX 571

MAPLETON ME 04757
B5819P81

Previous Owner
CLAYTON, PAUL B.
P.O. BOX 244

WASHBURN ME 04786
Sale Date: 9/07/2018

Previous Owner
ClaytonElsie- Estate of
P.O. Box 342

Washburn ME
Sale Date: 7/16/2006

Inspection Witnessed By:

X Date

| No./Date | Description | Date Insp. |
|---|---|---|
| | | |
| | | |
| | | |

Notes:

## Property Data

Neighborhood **1 Neighborhood One**

Tree Growth Year **0**

1ST MORTGAGE **0**

2ND MORTGAGE **0**

Zone/Land Use **1 Residential**

Secondary Zone

Topography **1 Level**

| | | |
|---|---|---|
| 1.Level | 4.Below St | 7.LevelBog |
| 2.Rolling | 5.Low | 8. |
| 3.Above St | 6.Swampy | 9. |

Utilities

| | | |
|---|---|---|
| 1.Public | 4.Dr Well | 7.Cesspool |
| 2.Water | 5.Dug Well | 8. |
| 3.Sewer | 6.Septic | 9.None |

Street **1 Paved**

| | | |
|---|---|---|
| 1.Paved | 4.Proposed | 7. |
| 2.Semi Imp | 5.R/O/W | 8. |
| 3.Gravel | 6. | 9.None |

TG PLAN YEAR **0**

Tif District # **0**

## Sale Data

Sale Date **9/07/2018**

Price **1,200**

Sale Type **1 Land Only**

| | | |
|---|---|---|
| 1.Land | 4.Mobile | 7.C/I L&B |
| 2.L & B | 5.Other | 8. |
| 3.Building | 6.C/I Land | 9. |

Financing **9 Unknown**

| | | |
|---|---|---|
| 1.Convent | 4.Seller | 7. |
| 2.FHA/VA | 5.Private | 8. |
| 3.Assumed | 6.Cash | 9.Unknown |

Validity **1 Arms Length Sale**

| | | |
|---|---|---|
| 1.Valid | 4.Split | 7.Renovate |
| 2.Related | 5.Partial | 8.Other |
| 3.Distress | 6.Exempt | 9. |

Verified **5 Public Record**

| | | |
|---|---|---|
| 1.Buyer | 4.Agent | 7.Family |
| 2.Seller | 5.Pub Rec | 8.Other |
| 3.Lender | 6.MLS | 9. |

## Assessment Record

| Year | Land | Buildings | Exempt | Total |
|---|---|---|---|---|
| 2007 | 2,400 | 0 | 0 | 2,400 |
| 2008 | 2,400 | 0 | 0 | 2,400 |
| 2009 | 2,400 | 0 | 0 | 2,400 |
| 2012 | 2,400 | 0 | 0 | 2,400 |
| 2013 | 3,200 | 0 | 0 | 3,200 |
| 2015 | 3,200 | 0 | 0 | 3,200 |
| 2018 | 3,200 | 0 | 0 | 3,200 |
| 2019 | 3,100 | 0 | 0 | 3,100 |
| 2020 | 3,100 | 0 | 0 | 3,100 |

## Land Data

| Front Foot | Type | Effective Frontage | Effective Depth | Influence Factor | Influence Code |
|---|---|---|---|---|---|
| 11.Regular Lot | | | | % | |
| 12.Delta Triangle | | | | % | |
| 13.Nabla Triangle | | | | % | |
| 14.Rear Land | | | | % | |
| 15.Class I Road | | | | % | |
| | | | | % | |
| | | | | % | |
| **Square Foot** | | **Square Feet** | | | |
| 16.Class II Road | | | | % | |
| 17.Municipal Rese | | | | % | |
| 18.Munic Sep Lago | | | | % | |
| 19.Gravel Pit | | | | % | |
| 20.Industrial Bas | | | | % | |
| | | | | % | |
| | | | | % | |
| **Fract. Acre** | | **Acreage/Sites** | | | |
| 21.Developed Pave | 22 | 0.12 | | 100 % | 0 |
| 22.Undev Paved (F | | | | % | |
| 23.Developed Grav | | | | % | |
| **Acres** | | | | % | |
| 24.Undev Gravel ( | | | | % | |
| 25.Comm Base Pave | | | | % | |
| 26.Comm Base Grav | | | | % | |
| 27.Backlot | | | | % | |
| 28.Rear Land | | | | % | |
| 29.Pavement | | | | % | |

**Total Acreage** 0.12

### Influence Codes

1.Unimproved
2.Excess Frtg
3.Topography
4.Size/Shape
5.Access
6.Restriction
7.Open Space
8.View/Environ
9.Fract Share

**Acres**

30.Utility R O W
31.Tillable
32.Pasture
33.Orchard
34.Softwood F&O
35.Mixed Wood F&O
36.Hardwood F&O
37.Softwood TG
38.Mixed Wood TG
39.Hardwood TG
40.Wasteland
41.Open Space
42.Mobile Home Si
43.Condo Site
44.Lot Improvemen
45.Subdivision Lo
46.Heavy Ind Sit

**Washburn**

# Washburn

Map Lot 004-017 | Account 213 | Location HILT STREET | Card 1 Of 1 | 11/18/2020

| | | |
|---|---|---|
| Building Style **0** | | |
| 1.Conv. | 5.Garrison | 9.Gambrel |
| 2.Ranch | 6.Salt Box | 10.Other |
| 3.R Ranch | 7.Contemp | 11.Split |
| 4.Cape | 8.Log | 12. |
| Dwelling Units **0** | | |
| Other Units **0** | | |
| Stories **0** | | |
| 1.1 | 4.1.5 | 7. |
| 2.2 | 5.1.75 | 8. |
| 3.3 | 6.2.5 | 9. |
| Exterior Walls **0** | | |
| 1.Wood | 5.Stucco | 9.T-111 |
| 2.Vin/Al | 6.Brick | 10.Other |
| 3.Compos. | 7.Stone | 11. |
| 4.Asbestos | 8.Concrete | 12. |
| Roof Surface **0** | | |
| 1.Asphalt | 4.Composit | 7. |
| 2.Slate | 5.Wood | 8. |
| 3.Metal | 6.Other | 9. |
| SF Masonry Trim **0** | | |
| OPEN-3-CUSTOM **0** | | |
| OPEN-4-CUSTOM **0** | | |
| Year Built **0** | | |
| Year Remodeled **0** | | |
| Foundation **0** | | |
| 1.Concrete | 4.Wood | 7. |
| 2.C Block | 5.Slab | 8. |
| 3.Br/Stone | 6.Piers | 9. |
| Basement **0** | | |
| 1.1/4 Bmt | 4.Full Bmt | 7. |
| 2.1/2 Bmt | 5.None | 8. |
| 3.3/4 Bmt | 6. | 9.None |
| Bsmt Gar # Cars **0** | | |
| Wet Basement **0** | | |
| 1.Dry | 4. | 7. |
| 2.Damp | 5. | 8. |
| 3.Wet | 6. | 9. |

| | | |
|---|---|---|
| SF Bsmt Living **0** | | |
| Fin Bsmt Grade **0 0** | | |
| OPEN 5 OPTIONAL **0** | | |
| Heat Type **100%** **0** | | |
| 1.HWBB | 5.FWA | 9.No Heat |
| 2.HWCI | 6.GravWA | 10. |
| 3.H Pump | 7.Electric | 11. |
| 4.Steam | 8.Fl/Wall | 12. |
| Cool Type **0%** **9 None** | | |
| 1.Refrig | 4.W&C Air | 7. |
| 2.Evapor | 5. | 8. |
| 3.H Pump | 6. | 9.None |
| Kitchen Style **0** | | |
| 1.Modern | 4.Obsolete | 7. |
| 2.Typical | 5. | 8. |
| 3.Old Type | 6. | 9.None |
| Bath(s) Style **0** | | |
| 1.Modern | 4.Obsolete | 7. |
| 2.Typical | 5. | 8. |
| 3.Old Type | 6. | 9.None |
| # Rooms **0** | | |
| # Bedrooms **0** | | |
| # Full Baths **0** | | |
| # Half Baths **0** | | |
| # Addn Fixtures **0** | | |
| # Fireplaces **0** | | |

TRIO Software
A Division of Harris Computer Systems

| | | |
|---|---|---|
| Layout **0** | | |
| 1.Typical | 4. | 7. |
| 2.Inadeq | 5. | 8. |
| 3.Poor | 6. | 9. |
| Attic **0** | | |
| 1.1/4 Fin | 4.Full Fin | 7. |
| 2.1/2 Fin | 5.Fl/Stair | 8. |
| 3.3/4 Fin | 6. | 9.None |
| Insulation **0** | | |
| 1.Full | 4.Minimal | 7. |
| 2.Heavy | 5.Partial | 8. |
| 3.Capped | 6. | 9.None |
| Unfinished % **0%** | | |
| Grade & Factor **0 0%** | | |
| 1.E Grade | 4.B Grade | 7. |
| 2.D Grade | 5.A Grade | 8.SC Grade |
| 3.C Grade | 6.AA Grade | 9.Same |
| SQFT (Footprint) **0** | | |
| Condition **0** | | |
| 1.Poor | 4.Avg | 7.V G |
| 2.Fair | 5.Avg+ | 8.Exc |
| 3.Avg- | 6.Good | 9.Same |
| Phys. % Good **0%** | | |
| Funct. % Good **100%** | | |
| Functional Code **9 None** | | |
| 1.Incomp | 4.Delap | 7.No Power |
| 2.O-Built | 5.Bsmt | 8.LongTerm |
| 3.Damage | 6.Common | 9.None |
| Econ. % Good **100%** | | |
| Economic Code **None** | | |
| 0.None | 3.No Power | 7. |
| 1.Location | 4.Generate | 8. |
| 2.Encroach | 9.None | 9. |
| Entrance Code **0** | | |
| 1.Interior | 4.Vacant | 7. |
| 2.Refusal | 5.Estimate | 8. |
| 3.Informed | 6.Reviewed | 9. |
| Information Code **0** | | |
| 1.Owner | 4.Agent | 7. |
| 2.Relative | 5.Estimate | 8. |
| 3.Tenant | 6.Other | 9. |

Date Inspected

## Additions, Outbuildings & Improvements

| Type | Year | Units | Grade | Cond | Phys. | Funct. | Sound Value |
|---|---|---|---|---|---|---|---|
| | | | | | % | % | |
| | | | | | % | % | |
| | | | | | % | % | |
| | | | | | % | % | |
| | | | | | % | % | |
| | | | | | % | % | |
| | | | | | % | % | |
| | | | | | % | % | |
| | | | | | % | % | |
| | | | | | % | % | |

1.One Story Fram
2.Two Story Fram
3.Three Story Fr
4.1 & 1/2 Story
5.1 & 3/4 Story
6.2 & 1/2 Story
21.Open Frame Por
22.Encl Frame Por
23.Frame Garage
24.Frame Shed
25.Frame Bay Wind
26.1SFr Overhang
27.Unfin Basement
28.Unfinished Att
29.Finished Attic

Map Lot 004-018 Account 1054 Location 3 HILT STREET Card 1 Of 1 11/18/2020

STEVENS, MICHAEL

P.O. BOX 571

MAPLETON ME 04757
B5800P122

Previous Owner
KAJA HOLDINGS 2, LLC
16 BERRYHILL ROAD
SUITE 200
COLUMBIA SC 29210 6433
Sale Date: 7/24/2018

Previous Owner
FEDERAL HOME LOAN MORTGAGE CORPORATION
8609 WESTWOOD CENTER DRIVE

VIENNA VA 22182
Sale Date: 9/23/2013

Previous Owner
BANK OF AMERICA, N.A.
6400 LEGACY DRIVE

PLANO TX 75024
Sale Date: 10/04/2012

Inspection Witnessed By:

X Date

| No./Date | Description | Date Insp. |
|---|---|---|
| | | |
| | | |
| | | |

Notes:
* Added garage to property for 2020.

**Washburn**

## Property Data

Neighborhood **1 Neighborhood One**

Tree Growth Year **0**

1ST MORTGAGE **0**

2ND MORTGAGE **0**

Zone/Land Use **1 Residential**

Secondary Zone

Topography **1 Level**

| | | |
|---|---|---|
| 1.Level | 4.Below St | 7.LevelBog |
| 2.Rolling | 5.Low | 8. |
| 3.Above St | 6.Swampy | 9. |

Utilities **2 Public Water** **3 Public Sewer**

| | | |
|---|---|---|
| 1.Public | 4.Dr Well | 7.Cesspool |
| 2.Water | 5.Dug Well | 8. |
| 3.Sewer | 6.Septic | 9.None |

Street **1 Paved**

| | | |
|---|---|---|
| 1.Paved | 4.Proposed | 7. |
| 2.Semi Imp | 5.R/O/W | 8. |
| 3.Gravel | 6. | 9.None |

TG PLAN YEAR **0**

Tif District # **0**

## Sale Data

Sale Date **7/24/2018**

Price **7,000**

Sale Type **2 Land & Buildings**

| | | |
|---|---|---|
| 1.Land | 4.Mobile | 7.C/I L&B |
| 2.L & B | 5.Other | 8. |
| 3.Building | 6.C/I Land | 9. |

Financing **9 Unknown**

| | | |
|---|---|---|
| 1.Convent | 4.Seller | 7. |
| 2.FHA/VA | 5.Private | 8. |
| 3.Assumed | 6.Cash | 9.Unknown |

Validity **8 Other Non Valid**

| | | |
|---|---|---|
| 1.Valid | 4.Split | 7.Renovate |
| 2.Related | 5.Partial | 8.Other |
| 3.Distress | 6.Exempt | 9. |

Verified **5 Public Record**

| | | |
|---|---|---|
| 1.Buyer | 4.Agent | 7.Family |
| 2.Seller | 5.Pub Rec | 8.Other |
| 3.Lender | 6.MLS | 9. |

## Assessment Record

| Year | Land | Buildings | Exempt | Total |
|---|---|---|---|---|
| 2007 | 4,200 | 37,600 | 0 | 41,800 |
| 2008 | 4,200 | 37,600 | 0 | 41,800 |
| 2009 | 4,200 | 37,600 | 0 | 41,800 |
| 2012 | 4,200 | 37,600 | 0 | 41,800 |
| 2013 | 5,500 | 37,600 | 0 | 43,100 |
| 2015 | 5,500 | 37,600 | 0 | 43,100 |
| 2018 | 5,500 | 28,800 | 0 | 34,300 |
| 2019 | 8,300 | 44,500 | 0 | 52,800 |
| 2020 | 8,300 | 56,500 | 25,000 | 39,800 |

## Land Data

| Front Foot | Type | Effective Frontage | Effective Depth | Influence Factor | Influence Code |
|---|---|---|---|---|---|
| 11.Regular Lot | | | | % | |
| 12.Delta Triangle | | | | % | |
| 13.Nabla Triangle | | | | % | |
| 14.Rear Land | | | | % | |
| 15.Class I Road | | | | % | |
| | | | | % | |
| | | | | % | |
| **Square Foot** | | **Square Feet** | | | |
| 16.Class II Road | | | | % | |
| 17.Municipal Rese | | | | % | |
| 18.Munic Sep Lago | | | | % | |
| 19.Gravel Pit | | | | % | |
| 20.Industrial Bas | | | | % | |
| | | | | % | |
| | | | | % | |
| **Fract. Acre** | | **Acreage/Sites** | | | |
| 21.Developed Pave | 21 | 0.25 | | 100 % | 0 |
| 22.Undev Paved (F | | | | % | |
| 23.Developed Grav | | | | % | |
| **Acres** | | | | % | |
| 24.Undev Gravel ( | | | | % | |
| 25.Comm Base Pave | | | | % | |
| 26.Comm Base Grav | | | | % | |
| 27.Backlot | | | | % | |
| 28.Rear Land | | | | % | |
| 29.Pavement | | | | % | |

**Total Acreage** 0.25

**Influence Codes**

1.Unimproved
2.Excess Frtg
3.Topography
4.Size/Shape
5.Access
6.Restriction
7.Open Space
8.View/Environ
9.Fract Share
**Acres**
30.Utility R O W
31.Tillable
32.Pasture
33.Orchard
34.Softwood F&O
35.Mixed Wood F&O
36.Hardwood F&O
37.Softwood TG
38.Mixed Wood TG
39.Hardwood TG
40.Wasteland
41.Open Space
42.Mobile Home Si
43.Condo Site
44.Lot Improvemen
45.Subdivision Lo
46.Heavy Ind Sit

# Washburn

Map Lot 004-018 | Account 1054 | Location 3 HILT STREET | Card 1 Of 1 | 11/18/2020

| | | | |
|---|---|---|---|
| Building Style | **1 Conventional** | | |
| 1.Conv. | 5.Garrison | 9.Gambrel | |
| 2.Ranch | 6.Salt Box | 10.Other | |
| 3.R Ranch | 7.Contemp | 11.Split | |
| 4.Cape | 8.Log | 12. | |
| Dwelling Units | **1** | | |
| Other Units | **0** | | |
| Stories | **2 Two Story** | | |
| 1.1 | 4.1.5 | 7. | |
| 2.2 | 5.1.75 | 8. | |
| 3.3 | 6.2.5 | 9. | |
| Exterior Walls | **2 Vinyl/Aluminum** | | |
| 1.Wood | 5.Stucco | 9.T-111 | |
| 2.Vin/Al | 6.Brick | 10.Other | |
| 3.Compos. | 7.Stone | 11. | |
| 4.Asbestos | 8.Concrete | 12. | |
| Roof Surface | **3 Sheet Metal** | | |
| 1.Asphalt | 4.Composit | 7. | |
| 2.Slate | 5.Wood | 8. | |
| 3.Metal | 6.Other | 9. | |
| SF Masonry Trim | **0** | | |
| OPEN-3-CUSTOM | **0** | | |
| OPEN-4-CUSTOM | **0** | | |
| Year Built | **1950** | | |
| Year Remodeled | **0** | | |
| Foundation | **1 Concrete** | | |
| 1.Concrete | 4.Wood | 7. | |
| 2.C Block | 5.Slab | 8. | |
| 3.Br/Stone | 6.Piers | 9. | |
| Basement | **4 Full Basement** | | |
| 1.1/4 Bmt | 4.Full Bmt | 7. | |
| 2.1/2 Bmt | 5.None | 8. | |
| 3.3/4 Bmt | 6. | 9.None | |
| Bsmt Gar # Cars | **0** | | |
| Wet Basement | **3 Wet Basement** | | |
| 1.Dry | 4. | 7. | |
| 2.Damp | 5. | 8. | |
| 3.Wet | 6. | 9. | |

| | | | |
|---|---|---|---|
| SF Bsmt Living | **0** | | |
| Fin Bsmt Grade | **0 0** | | |
| OPEN 5 OPTIONAL | **0** | | |
| Heat Type | **100%** | **5 Forced Warm Air** | |
| 1.HWBB | 5.FWA | 9.No Heat | |
| 2.HWCI | 6.GravWA | 10. | |
| 3.H Pump | 7.Electric | 11. | |
| 4.Steam | 8.Fl/Wall | 12. | |
| Cool Type | **100%** | **3 Heat Pump** | |
| 1.Refrig | 4.W&C Air | 7. | |
| 2.Evapor | 5. | 8. | |
| 3.H Pump | 6. | 9.None | |
| Kitchen Style | **2 Typical** | | |
| 1.Modern | 4.Obsolete | 7. | |
| 2.Typical | 5. | 8. | |
| 3.Old Type | 6. | 9.None | |
| Bath(s) Style | **2 Typical Bath(s)** | | |
| 1.Modern | 4.Obsolete | 7. | |
| 2.Typical | 5. | 8. | |
| 3.Old Type | 6. | 9.None | |
| # Rooms | **5** | | |
| # Bedrooms | **3** | | |
| # Full Baths | **1** | | |
| # Half Baths | **1** | | |
| # Addn Fixtures | **0** | | |
| # Fireplaces | **0** | | |

TRIO Software
A Division of Harris Computer Systems

| | | | |
|---|---|---|---|
| Layout | **1 Typical** | | |
| 1.Typical | 4. | 7. | |
| 2.Inadeq | 5. | 8. | |
| 3.Poor | 6. | 9. | |
| Attic | **9 None** | | |
| 1.1/4 Fin | 4.Full Fin | 7. | |
| 2.1/2 Fin | 5.Fl/Stair | 8. | |
| 3.3/4 Fin | 6. | 9.None | |
| Insulation | **1 Full** | | |
| 1.Full | 4.Minimal | 7. | |
| 2.Heavy | 5.Partial | 8. | |
| 3.Capped | 6. | 9.None | |
| Unfinished % | **0%** | | |
| Grade & Factor | **2 Fair 110%** | | |
| 1.E Grade | 4.B Grade | 7. | |
| 2.D Grade | 5.A Grade | 8.SC Grade | |
| 3.C Grade | 6.AA Grade | 9.Same | |
| SQFT (Footprint) | **502** | | |
| Condition | **6 Good** | | |
| 1.Poor | 4.Avg | 7.V G | |
| 2.Fair | 5.Avg+ | 8.Exc | |
| 3.Avg- | 6.Good | 9.Same | |
| Phys. % Good | **0%** | | |
| Funct. % Good | **100%** | | |
| Functional Code | **9 None** | | |
| 1.Incomp | 4.Delap | 7.No Power | |
| 2.O-Built | 5.Bsmt | 8.LongTerm | |
| 3.Damage | 6.Common | 9.None | |
| Econ. % Good | **100%** | | |
| Economic Code | **None** | | |
| 0.None | 3.No Power | 7. | |
| 1.Location | 4.Generate | 8. | |
| 2.Encroach | 9.None | 9. | |
| Entrance Code | **5 Estimated** | | |
| 1.Interior | 4.Vacant | 7. | |
| 2.Refusal | 5.Estimate | 8. | |
| 3.Informed | 6.Reviewed | 9. | |
| Information Code | **5 Estimate** | | |
| 1.Owner | 4.Agent | 7. | |
| 2.Relative | 5.Estimate | 8. | |
| 3.Tenant | 6.Other | 9. | |

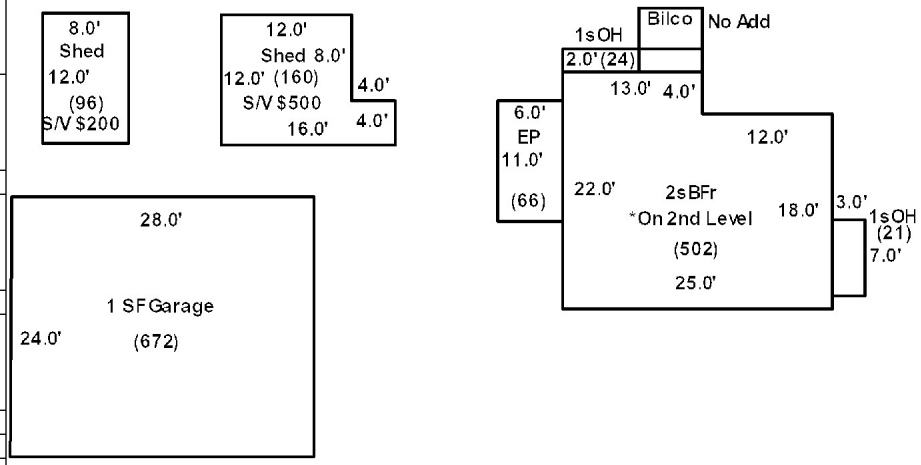

Date Inspected 9/01/2018

## Additions, Outbuildings & Improvements

| Type | Year | Units | Grade | Cond | Phys. | Funct. | Sound Value |
|---|---|---|---|---|---|---|---|
| 26 1SFr Overhang | 0 | 21 | 0 0 | 0 | 0 % | 0 % | |
| 26 1SFr Overhang | 0 | 26 | 0 0 | 0 | 0 % | 0 % | |
| 24 Frame Shed | 0 | | | | % | % | 500 |
| 24 Frame Shed | 0 | | | | % | % | 200 |
| 22 Encl Frame Porch | 0 | 66 | 0 0 | 0 | 0 % | 0 % | |
| 23 Frame Garage | 2019 | 672 | 3 100 | 4 | 0 % | 100 % | |
| | | | | | % | % | |
| | | | | | % | % | |
| | | | | | % | % | |
| | | | | | % | % | |

1.One Story Fram
2.Two Story Fram
3.Three Story Fr
4.1 & 1/2 Story
5.1 & 3/4 Story
6.2 & 1/2 Story
21.Open Frame Por
22.Encl Frame Por
23.Frame Garage
24.Frame Shed
25.Frame Bay Wind
26.1SFr Overhang
27.Unfin Basement
28.Unfinished Att
29.Finished Attic

Map Lot 004-019 Account 951 Location Church Street Card 1 Of 1 11/18/2020

Washburn Water & Sewer District

22 Hilt Street

Washburn ME 04786
B4729P329

## Property Data

Neighborhood **1 Neighborhood One**

Tree Growth Year **0**

1ST MORTGAGE **0**

2ND MORTGAGE **0**

Zone/Land Use **1 Residential**

Secondary Zone

Topography **3 Above Street**

| | | |
|---|---|---|
| 1.Level | 4.Below St | 7.LevelBog |
| 2.Rolling | 5.Low | 8. |
| 3.Above St | 6.Swampy | 9. |

Utilities

| | | |
|---|---|---|
| 1.Public | 4.Dr Well | 7.Cesspool |
| 2.Water | 5.Dug Well | 8. |
| 3.Sewer | 6.Septic | 9.None |

Street **1 Paved**

| | | |
|---|---|---|
| 1.Paved | 4.Proposed | 7. |
| 2.Semi Imp | 5.R/O/W | 8. |
| 3.Gravel | 6. | 9.None |

TG PLAN YEAR **0**

Tif District # **0**

## Sale Data

Sale Date **7/13/2009**

Price

Sale Type **2 Land & Buildings**

| | | |
|---|---|---|
| 1.Land | 4.Mobile | 7.C/I L&B |
| 2.L & B | 5.Other | 8. |
| 3.Building | 6.C/I Land | 9. |

Financing

| | | |
|---|---|---|
| 1.Convent | 4.Seller | 7. |
| 2.FHA/VA | 5.Private | 8. |
| 3.Assumed | 6.Cash | 9.Unknown |

Validity

| | | |
|---|---|---|
| 1.Valid | 4.Split | 7.Renovate |
| 2.Related | 5.Partial | 8.Other |
| 3.Distress | 6.Exempt | 9. |

Verified **5 Public Record**

| | | |
|---|---|---|
| 1.Buyer | 4.Agent | 7.Family |
| 2.Seller | 5.Pub Rec | 8.Other |
| 3.Lender | 6.MLS | 9. |

## Assessment Record

| Year | Land | Buildings | Exempt | Total |
|---|---|---|---|---|
| 2007 | 4,700 | 371,000 | 375,700 | 0 |
| 2008 | 4,700 | 371,000 | 375,700 | 0 |
| 2009 | 5,100 | 371,000 | 376,100 | 0 |
| 2012 | 5,100 | 371,000 | 376,100 | 0 |
| 2013 | 6,600 | 371,000 | 377,600 | 0 |
| 2015 | 6,600 | 371,000 | 377,600 | 0 |
| 2018 | 6,600 | 371,000 | 377,600 | 0 |
| 2019 | 279,900 | 0 | 279,900 | 0 |
| 2020 | 279,900 | 0 | 279,900 | 0 |

## Land Data

| Front Foot | Type | Effective Frontage | Effective Depth | Influence Factor | Influence Code |
|---|---|---|---|---|---|
| 11.Regular Lot | | | | % | |
| 12.Delta Triangle | | | | % | |
| 13.Nabla Triangle | | | | % | |
| 14.Rear Land | | | | % | |
| 15.Class I Road | | | | % | |
| | | | | % | |
| | | | | % | |
| **Square Foot** | | **Square Feet** | | | |
| 16.Class II Road | | | | % | |
| 17.Municipal Rese | | | | % | |
| 18.Munic Sep Lago | | | | % | |
| 19.Gravel Pit | | | | % | |
| 20.Industrial Bas | | | | % | |
| | | | | % | |
| | | | | % | |
| **Fract. Acre** | | **Acreage/Sites** | | | |
| 21.Developed Pave | 26 | 1.00 | 100 | % | 0 |
| 22.Undev Paved (F | 28 | 1.00 | 100 | % | 0 |
| 23.Developed Grav | 17 | 1.00 | 100 | % | 0 |
| **Acres** | | | | % | |
| 24.Undev Gravel ( | | | | % | |
| 25.Comm Base Pave | | | | % | |
| 26.Comm Base Grav | | | | % | |
| 27.Backlot | | | | % | |
| 28.Rear Land | | | | | |
| 29.Pavement | | | | | |

**Total Acreage** 3.00

### Influence Codes

1.Unimproved
2.Excess Frtg
3.Topography
4.Size/Shape
5.Access
6.Restriction
7.Open Space
8.View/Environ
9.Fract Share
**Acres**
30.Utility R O W
31.Tillable
32.Pasture
33.Orchard
34.Softwood F&O
35.Mixed Wood F&O
36.Hardwood F&O
37.Softwood TG
38.Mixed Wood TG
39.Hardwood TG
40.Wasteland
41.Open Space
42.Mobile Home Si
43.Condo Site
44.Lot Improvemen
45.Subdivision Lo
46.Heavy Ind Sit

Inspection Witnessed By:

X Date

| No./Date | Description | Date Insp. |
|---|---|---|
| | | |
| | | |
| | | |

Notes:

*Resevoir priced as land for reval. All objects depicted in sketch are listed as personal property SBA 4-19-ON

**Washburn**

**Washburn**

Map Lot 004-019 | Account 951 | Location Church Street | Card 1 Of 1 | 11/18/2020

| | | |
|---|---|---|
| Building Style **0** | | |
| 1.Conv. | 5.Garrison | 9.Gambrel |
| 2.Ranch | 6.Salt Box | 10.Other |
| 3.R Ranch | 7.Contemp | 11.Split |
| 4.Cape | 8.Log | 12. |
| Dwelling Units **0** | | |
| Other Units **0** | | |
| Stories **0** | | |
| 1.1 | 4.1.5 | 7. |
| 2.2 | 5.1.75 | 8. |
| 3.3 | 6.2.5 | 9. |
| Exterior Walls **0** | | |
| 1.Wood | 5.Stucco | 9.T-111 |
| 2.Vin/Al | 6.Brick | 10.Other |
| 3.Compos. | 7.Stone | 11. |
| 4.Asbestos | 8.Concrete | 12. |
| Roof Surface **0** | | |
| 1.Asphalt | 4.Composit | 7. |
| 2.Slate | 5.Wood | 8. |
| 3.Metal | 6.Other | 9. |
| SF Masonry Trim **0** | | |
| OPEN-3-CUSTOM **0** | | |
| OPEN-4-CUSTOM **0** | | |
| Year Built **0** | | |
| Year Remodeled **0** | | |
| Foundation **0** | | |
| 1.Concrete | 4.Wood | 7. |
| 2.C Block | 5.Slab | 8. |
| 3.Br/Stone | 6.Piers | 9. |
| Basement **0** | | |
| 1.1/4 Bmt | 4.Full Bmt | 7. |
| 2.1/2 Bmt | 5.None | 8. |
| 3.3/4 Bmt | 6. | 9.None |
| Bsmt Gar # Cars **0** | | |
| Wet Basement **0** | | |
| 1.Dry | 4. | 7. |
| 2.Damp | 5. | 8. |
| 3.Wet | 6. | 9. |

| | | |
|---|---|---|
| SF Bsmt Living **0** | | |
| Fin Bsmt Grade **0 0** | | |
| OPEN 5 OPTIONAL **0** | | |
| Heat Type **100%** **0** | | |
| 1.HWBB | 5.FWA | 9.No Heat |
| 2.HWCI | 6.GravWA | 10. |
| 3.H Pump | 7.Electric | 11. |
| 4.Steam | 8.Fl/Wall | 12. |
| Cool Type **0%** **9 None** | | |
| 1.Refrig | 4.W&C Air | 7. |
| 2.Evapor | 5. | 8. |
| 3.H Pump | 6. | 9.None |
| Kitchen Style **0** | | |
| 1.Modern | 4.Obsolete | 7. |
| 2.Typical | 5. | 8. |
| 3.Old Type | 6. | 9.None |
| Bath(s) Style **0** | | |
| 1.Modern | 4.Obsolete | 7. |
| 2.Typical | 5. | 8. |
| 3.Old Type | 6. | 9.None |
| # Rooms **0** | | |
| # Bedrooms **0** | | |
| # Full Baths **0** | | |
| # Half Baths **0** | | |
| # Addn Fixtures **0** | | |
| # Fireplaces **0** | | |

TRIO Software
A Division of Harris Computer Systems

| | | |
|---|---|---|
| Layout **0** | | |
| 1.Typical | 4. | 7. |
| 2.Inadeq | 5. | 8. |
| 3.Poor | 6. | 9. |
| Attic **0** | | |
| 1.1/4 Fin | 4.Full Fin | 7. |
| 2.1/2 Fin | 5.Fl/Stair | 8. |
| 3.3/4 Fin | 6. | 9.None |
| Insulation **0** | | |
| 1.Full | 4.Minimal | 7. |
| 2.Heavy | 5.Partial | 8. |
| 3.Capped | 6. | 9.None |
| Unfinished % **0%** | | |
| Grade & Factor **0 0%** | | |
| 1.E Grade | 4.B Grade | 7. |
| 2.D Grade | 5.A Grade | 8.SC Grade |
| 3.C Grade | 6.AA Grade | 9.Same |
| SQFT (Footprint) **0** | | |
| Condition **0** | | |
| 1.Poor | 4.Avg | 7.V G |
| 2.Fair | 5.Avg+ | 8.Exc |
| 3.Avg- | 6.Good | 9.Same |
| Phys. % Good **0%** | | |
| Funct. % Good **100%** | | |
| Functional Code **9 None** | | |
| 1.Incomp | 4.Delap | 7.No Power |
| 2.O-Built | 5.Bsmt | 8.LongTerm |
| 3.Damage | 6.Common | 9.None |
| Econ. % Good **100%** | | |
| Economic Code **None** | | |
| 0.None | 3.No Power | 7. |
| 1.Location | 4.Generate | 8. |
| 2.Encroach | 9.None | 9. |
| Entrance Code **5 Estimated** | | |
| 1.Interior | 4.Vacant | 7. |
| 2.Refusal | 5.Estimate | 8. |
| 3.Informed | 6.Reviewed | 9. |
| Information Code **5 Estimate** | | |
| 1.Owner | 4.Agent | 7. |
| 2.Relative | 5.Estimate | 8. |
| 3.Tenant | 6.Other | 9. |

Date Inspected 9/01/2018

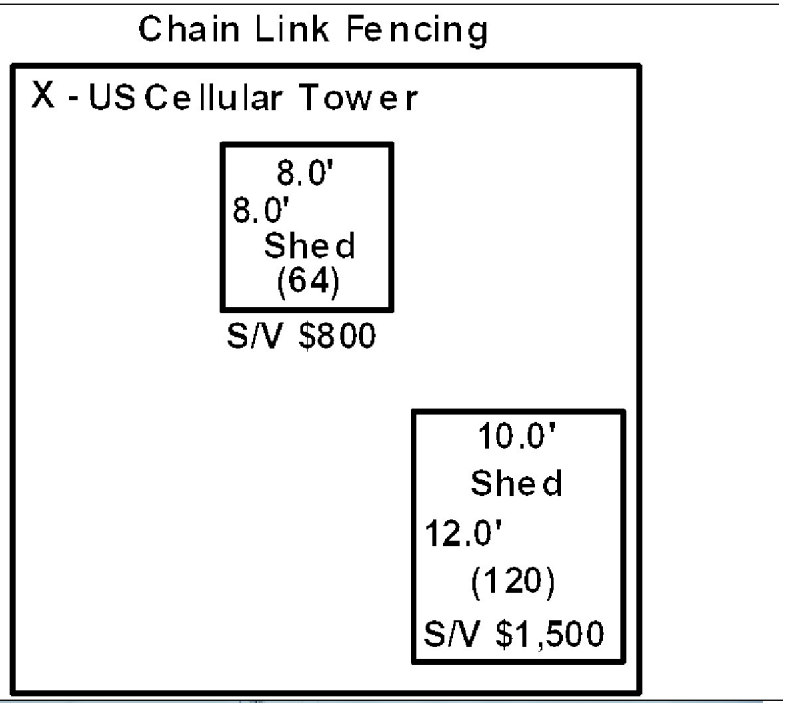

**Additions, Outbuildings & Improvements**

| Type | Year | Units | Grade | Cond | Phys. | Funct. | Sound Value |
|---|---|---|---|---|---|---|---|
| 24 Frame Shed | 0 | | | | % | % | 0 |
| 24 Frame Shed | 0 | | | | % | % | 0 |
| 102 C-L Fencing /LF | 2000 | | | | % | % | 0 |
| | | | | | % | % | |
| | | | | | % | % | |
| | | | | | % | % | |
| | | | | | % | % | |
| | | | | | % | % | |
| | | | | | % | % | |
| | | | | | % | % | |

1.One Story Fram
2.Two Story Fram
3.Three Story Fr
4.1 & 1/2 Story
5.1 & 3/4 Story
6.2 & 1/2 Story
21.Open Frame Por
22.Encl Frame Por
23.Frame Garage
24.Frame Shed
25.Frame Bay Wind
26.1SFr Overhang
27.Unfin Basement
28.Unfinished Att
29.Finished Attic

Map Lot 004-020 | Account 113 | Location NEW DUNNTOWN ROAD | Card 1 Of 1 | 11/18/2020

CHANDLER FAMILY LLC

1634 STATE ROAD

MAPLETON ME 04757
B3741P20 B5002P229

## Property Data

Neighborhood **1 Neighborhood One**

Tree Growth Year **0**

1ST MORTGAGE **0**

2ND MORTGAGE **0**

Zone/Land Use **1 Residential**

Secondary Zone

Topography **1 Level**

| | | |
|---|---|---|
| 1.Level | 4.Below St | 7.LevelBog |
| 2.Rolling | 5.Low | 8. |
| 3.Above St | 6.Swampy | 9. |

Utilities

| | | |
|---|---|---|
| 1.Public | 4.Dr Well | 7.Cesspool |
| 2.Water | 5.Dug Well | 8. |
| 3.Sewer | 6.Septic | 9.None |

Street **1 Paved**

| | | |
|---|---|---|
| 1.Paved | 4.Proposed | 7. |
| 2.Semi Imp | 5.R/O/W | 8. |
| 3.Gravel | 6. | 9.None |

TG PLAN YEAR **0**

Tif District # **0**

## Sale Data

Sale Date **12/03/2002**

Price

Sale Type

| | | |
|---|---|---|
| 1.Land | 4.Mobile | 7.C/I L&B |
| 2.L & B | 5.Other | 8. |
| 3.Building | 6.C/I Land | 9. |

Financing

| | | |
|---|---|---|
| 1.Convent | 4.Seller | 7. |
| 2.FHA/VA | 5.Private | 8. |
| 3.Assumed | 6.Cash | 9.Unknown |

Validity **1 Arms Length Sale**

| | | |
|---|---|---|
| 1.Valid | 4.Split | 7.Renovate |
| 2.Related | 5.Partial | 8.Other |
| 3.Distress | 6.Exempt | 9. |

Verified **5 Public Record**

| | | |
|---|---|---|
| 1.Buyer | 4.Agent | 7.Family |
| 2.Seller | 5.Pub Rec | 8.Other |
| 3.Lender | 6.MLS | 9. |

## Assessment Record

| Year | Land | Buildings | Exempt | Total |
|---|---|---|---|---|
| 2007 | 174,600 | 1,300 | 0 | 175,900 |
| 2008 | 174,600 | 1,300 | 0 | 175,900 |
| 2009 | 174,600 | 1,300 | 0 | 175,900 |
| 2012 | 174,600 | 1,300 | 0 | 175,900 |
| 2013 | 226,900 | 1,300 | 0 | 228,200 |
| 2015 | 226,900 | 1,300 | 0 | 228,200 |
| 2018 | 226,900 | 0 | 0 | 226,900 |
| 2019 | 432,500 | 0 | 0 | 432,500 |
| 2020 | 432,500 | 0 | 0 | 432,500 |

## Land Data

| Front Foot | Type | Effective Frontage | Effective Depth | Influence Factor | Influence Code |
|---|---|---|---|---|---|
| 11.Regular Lot | | | | % | |
| 12.Delta Triangle | | | | % | |
| 13.Nabla Triangle | | | | % | |
| 14.Rear Land | | | | % | |
| 15.Class I Road | | | | % | |
| | | | | % | |
| | | | | % | |
| **Square Foot** | | **Square Feet** | | | |
| 16.Class II Road | | | | % | |
| 17.Municipal Rese | | | | % | |
| 18.Munic Sep Lago | | | | % | |
| 19.Gravel Pit | | | | % | |
| 20.Industrial Bas | | | | % | |
| | | | | % | |
| | | | | % | |
| **Fract. Acre** | | **Acreage/Sites** | | | |
| 21.Developed Pave | 31 | 417.00 | 100 | % | 0 |
| 22.Undev Paved (F | 28 | 31.00 | 100 | % | 0 |
| 23.Developed Grav | | | | % | |
| **Acres** | | | | % | |
| 24.Undev Gravel ( | | | | % | |
| 25.Comm Base Pave | | | | % | |
| 26.Comm Base Grav | | | | % | |
| 27.Backlot | | | | % | |
| 28.Rear Land | | | | % | |
| 29.Pavement | | | | % | |

**Total Acreage** 448.00

### Influence Codes

1.Unimproved
2.Excess Frtg
3.Topography
4.Size/Shape
5.Access
6.Restriction
7.Open Space
8.View/Environ
9.Fract Share
**Acres**
30.Utility R O W
31.Tillable
32.Pasture
33.Orchard
34.Softwood F&O
35.Mixed Wood F&O
36.Hardwood F&O
37.Softwood TG
38.Mixed Wood TG
39.Hardwood TG
40.Wasteland
41.Open Space
42.Mobile Home Si
43.Condo Site
44.Lot Improvemen
45.Subdivision Lo
46.Heavy Ind Sit

Inspection Witnessed By:

X Date

| No./Date | Description | Date Insp. |
|---|---|---|
| | | |
| | | |
| | | |

Notes:

**Washburn**

# Washburn

Map Lot 004-020 | Account 113 | Location NEW DUNNTOWN ROAD | Card 1 Of 1 | 11/18/2020

| | | |
|---|---|---|
| Building Style **0** | | |
| 1.Conv. | 5.Garrison | 9.Gambrel |
| 2.Ranch | 6.Salt Box | 10.Other |
| 3.R Ranch | 7.Contemp | 11.Split |
| 4.Cape | 8.Log | 12. |
| Dwelling Units **0** | | |
| Other Units **0** | | |
| Stories **0** | | |
| 1.1 | 4.1.5 | 7. |
| 2.2 | 5.1.75 | 8. |
| 3.3 | 6.2.5 | 9. |
| Exterior Walls **0** | | |
| 1.Wood | 5.Stucco | 9.T-111 |
| 2.Vin/Al | 6.Brick | 10.Other |
| 3.Compos. | 7.Stone | 11. |
| 4.Asbestos | 8.Concrete | 12. |
| Roof Surface **0** | | |
| 1.Asphalt | 4.Composit | 7. |
| 2.Slate | 5.Wood | 8. |
| 3.Metal | 6.Other | 9. |
| SF Masonry Trim **0** | | |
| OPEN-3-CUSTOM **0** | | |
| OPEN-4-CUSTOM **0** | | |
| Year Built **0** | | |
| Year Remodeled **0** | | |
| Foundation **0** | | |
| 1.Concrete | 4.Wood | 7. |
| 2.C Block | 5.Slab | 8. |
| 3.Br/Stone | 6.Piers | 9. |
| Basement **0** | | |
| 1.1/4 Bmt | 4.Full Bmt | 7. |
| 2.1/2 Bmt | 5.None | 8. |
| 3.3/4 Bmt | 6. | 9.None |
| Bsmt Gar # Cars **0** | | |
| Wet Basement **0** | | |
| 1.Dry | 4. | 7. |
| 2.Damp | 5. | 8. |
| 3.Wet | 6. | 9. |

| | | |
|---|---|---|
| SF Bsmt Living **0** | | |
| Fin Bsmt Grade **0 0** | | |
| OPEN 5 OPTIONAL **0** | | |
| Heat Type **100%** **0** | | |
| 1.HWBB | 5.FWA | 9.No Heat |
| 2.HWCI | 6.GravWA | 10. |
| 3.H Pump | 7.Electric | 11. |
| 4.Steam | 8.Fl/Wall | 12. |
| Cool Type **0%** **9 None** | | |
| 1.Refrig | 4.W&C Air | 7. |
| 2.Evapor | 5. | 8. |
| 3.H Pump | 6. | 9.None |
| Kitchen Style **0** | | |
| 1.Modern | 4.Obsolete | 7. |
| 2.Typical | 5. | 8. |
| 3.Old Type | 6. | 9.None |
| Bath(s) Style **0** | | |
| 1.Modern | 4.Obsolete | 7. |
| 2.Typical | 5. | 8. |
| 3.Old Type | 6. | 9.None |
| # Rooms **0** | | |
| # Bedrooms **0** | | |
| # Full Baths **0** | | |
| # Half Baths **0** | | |
| # Addn Fixtures **0** | | |
| # Fireplaces **0** | | |

TRIO Software
A Division of Harris Computer Systems

| | | |
|---|---|---|
| Layout **0** | | |
| 1.Typical | 4. | 7. |
| 2.Inadeq | 5. | 8. |
| 3.Poor | 6. | 9. |
| Attic **0** | | |
| 1.1/4 Fin | 4.Full Fin | 7. |
| 2.1/2 Fin | 5.Fl/Stair | 8. |
| 3.3/4 Fin | 6. | 9.None |
| Insulation **0** | | |
| 1.Full | 4.Minimal | 7. |
| 2.Heavy | 5.Partial | 8. |
| 3.Capped | 6. | 9.None |
| Unfinished % **0%** | | |
| Grade & Factor **0 0%** | | |
| 1.E Grade | 4.B Grade | 7. |
| 2.D Grade | 5.A Grade | 8.SC Grade |
| 3.C Grade | 6.AA Grade | 9.Same |
| SQFT (Footprint) **0** | | |
| Condition **0** | | |
| 1.Poor | 4.Avg | 7.V G |
| 2.Fair | 5.Avg+ | 8.Exc |
| 3.Avg- | 6.Good | 9.Same |
| Phys. % Good **0%** | | |
| Funct. % Good **100%** | | |
| Functional Code **9 None** | | |
| 1.Incomp | 4.Delap | 7.No Power |
| 2.O-Built | 5.Bsmt | 8.LongTerm |
| 3.Damage | 6.Common | 9.None |
| Econ. % Good **100%** | | |
| Economic Code **None** | | |
| 0.None | 3.No Power | 7. |
| 1.Location | 4.Generate | 8. |
| 2.Encroach | 9.None | 9. |
| Entrance Code **0** | | |
| 1.Interior | 4.Vacant | 7. |
| 2.Refusal | 5.Estimate | 8. |
| 3.Informed | 6.Reviewed | 9. |
| Information Code **0** | | |
| 1.Owner | 4.Agent | 7. |
| 2.Relative | 5.Estimate | 8. |
| 3.Tenant | 6.Other | 9. |

Date Inspected

## Additions, Outbuildings & Improvements

| Type | Year | Units | Grade | Cond | Phys. | Funct. | Sound Value |
|---|---|---|---|---|---|---|---|
| | | | | | % | % | |
| | | | | | % | % | |
| | | | | | % | % | |
| | | | | | % | % | |
| | | | | | % | % | |
| | | | | | % | % | |
| | | | | | % | % | |
| | | | | | % | % | |
| | | | | | % | % | |
| | | | | | % | % | |

1.One Story Fram
2.Two Story Fram
3.Three Story Fr
4.1 & 1/2 Story
5.1 & 3/4 Story
6.2 & 1/2 Story
21.Open Frame Por
22.Encl Frame Por
23.Frame Garage
24.Frame Shed
25.Frame Bay Wind
26.1SFr Overhang
27.Unfin Basement
28.Unfinished Att
29.Finished Attic

Map Lot 004-021 | Account 371 | Location 61 CHURCH STREET | Card 1 Of 1 | 11/18/2020

SMILIE, JASON A.

PO Box 3641

Valdez AK 99686
B4475P1

Previous Owner
Doody, Heather
Smilie, Jason
P.O. Box 94
Washburn ME 04786
Sale Date: 7/31/2007

Inspection Witnessed By:

X Date

| No./Date | Description | Date Insp. |
|---|---|---|
| | | |
| | | |
| | | |

Notes:

**Washburn**

## Property Data

| | |
|---|---|
| Neighborhood | **1 Neighborhood One** |
| Tree Growth Year | **0** |
| 1ST MORTGAGE | **0** |
| 2ND MORTGAGE | **0** |
| Zone/Land Use | **1 Residential** |
| Secondary Zone | |
| Topography | **1 Level** |

| | | |
|---|---|---|
| 1.Level | 4.Below St | 7.LevelBog |
| 2.Rolling | 5.Low | 8. |
| 3.Above St | 6.Swampy | 9. |

Utilities

| | | |
|---|---|---|
| 1.Public | 4.Dr Well | 7.Cesspool |
| 2.Water | 5.Dug Well | 8. |
| 3.Sewer | 6.Septic | 9.None |

Street **1 Paved**

| | | |
|---|---|---|
| 1.Paved | 4.Proposed | 7. |
| 2.Semi Imp | 5.R/O/W | 8. |
| 3.Gravel | 6. | 9.None |

| | |
|---|---|
| TG PLAN YEAR | **0** |
| Tif District # | **0** |

## Sale Data

| | |
|---|---|
| Sale Date | **7/31/2007** |
| Price | **4,323** |
| Sale Type | **1 Land Only** |

| | | |
|---|---|---|
| 1.Land | 4.Mobile | 7.C/I L&B |
| 2.L & B | 5.Other | 8. |
| 3.Building | 6.C/I Land | 9. |

Financing

| | | |
|---|---|---|
| 1.Convent | 4.Seller | 7. |
| 2.FHA/VA | 5.Private | 8. |
| 3.Assumed | 6.Cash | 9.Unknown |

Validity **2 Related Parties**

| | | |
|---|---|---|
| 1.Valid | 4.Split | 7.Renovate |
| 2.Related | 5.Partial | 8.Other |
| 3.Distress | 6.Exempt | 9. |

Verified **5 Public Record**

| | | |
|---|---|---|
| 1.Buyer | 4.Agent | 7.Family |
| 2.Seller | 5.Pub Rec | 8.Other |
| 3.Lender | 6.MLS | 9. |

## Assessment Record

| Year | Land | Buildings | Exempt | Total |
|---|---|---|---|---|
| 2007 | 4,300 | 0 | 0 | 4,300 |
| 2008 | 4,300 | 0 | 0 | 4,300 |
| 2009 | 4,300 | 0 | 0 | 4,300 |
| 2012 | 4,300 | 0 | 0 | 4,300 |
| 2013 | 5,600 | 0 | 0 | 5,600 |
| 2015 | 5,600 | 0 | 0 | 5,600 |
| 2018 | 5,600 | 0 | 0 | 5,600 |
| 2019 | 4,500 | 0 | 0 | 4,500 |
| 2020 | 4,500 | 0 | 0 | 4,500 |

## Land Data

| Front Foot | Type | Effective Frontage | Effective Depth | Influence Factor | Influence Code |
|---|---|---|---|---|---|
| 11.Regular Lot | | | | % | |
| 12.Delta Triangle | | | | % | |
| 13.Nabla Triangle | | | | % | |
| 14.Rear Land | | | | % | |
| 15.Class I Road | | | | % | |
| | | | | % | |
| | | | | % | |
| **Square Foot** | | **Square Feet** | | | |
| 16.Class II Road | | | | % | |
| 17.Municipal Rese | | | | % | |
| 18.Munic Sep Lago | | | | % | |
| 19.Gravel Pit | | | | % | |
| 20.Industrial Bas | | | | % | |
| | | | | % | |
| | | | | % | |
| **Fract. Acre** | | **Acreage/Sites** | | | |
| 21.Developed Pave | 22 | 0.25 | | 100 % | 0 |
| 22.Undev Paved (F | | | | % | |
| 23.Developed Grav | | | | % | |
| **Acres** | | | | % | |
| 24.Undev Gravel ( | | | | % | |
| 25.Comm Base Pave | | | | % | |
| 26.Comm Base Grav | | | | % | |
| 27.Backlot | | | | % | |
| 28.Rear Land | | | | % | |
| 29.Pavement | | | | % | |

**Total Acreage** 0.25

### Influence Codes

1.Unimproved
2.Excess Frtg
3.Topography
4.Size/Shape
5.Access
6.Restriction
7.Open Space
8.View/Environ
9.Fract Share
**Acres**
30.Utility R O W
31.Tillable
32.Pasture
33.Orchard
34.Softwood F&O
35.Mixed Wood F&O
36.Hardwood F&O
37.Softwood TG
38.Mixed Wood TG
39.Hardwood TG
40.Wasteland
41.Open Space
42.Mobile Home Si
43.Condo Site
44.Lot Improvemen
45.Subdivision Lo
46.Heavy Ind Sit

# Washburn

Map Lot 004-021 | Account 371 | Location 61 CHURCH STREET | Card 1 Of 1 | 11/18/2020

| | | |
|---|---|---|
| Building Style **0** | | |
| 1.Conv. | 5.Garrison | 9.Gambrel |
| 2.Ranch | 6.Salt Box | 10.Other |
| 3.R Ranch | 7.Contemp | 11.Split |
| 4.Cape | 8.Log | 12. |
| Dwelling Units **0** | | |
| Other Units **0** | | |
| Stories **0** | | |
| 1.1 | 4.1.5 | 7. |
| 2.2 | 5.1.75 | 8. |
| 3.3 | 6.2.5 | 9. |
| Exterior Walls **0** | | |
| 1.Wood | 5.Stucco | 9.T-111 |
| 2.Vin/Al | 6.Brick | 10.Other |
| 3.Compos. | 7.Stone | 11. |
| 4.Asbestos | 8.Concrete | 12. |
| Roof Surface **0** | | |
| 1.Asphalt | 4.Composit | 7. |
| 2.Slate | 5.Wood | 8. |
| 3.Metal | 6.Other | 9. |
| SF Masonry Trim **0** | | |
| OPEN-3-CUSTOM **0** | | |
| OPEN-4-CUSTOM **0** | | |
| Year Built **0** | | |
| Year Remodeled **0** | | |
| Foundation **0** | | |
| 1.Concrete | 4.Wood | 7. |
| 2.C Block | 5.Slab | 8. |
| 3.Br/Stone | 6.Piers | 9. |
| Basement **0** | | |
| 1.1/4 Bmt | 4.Full Bmt | 7. |
| 2.1/2 Bmt | 5.None | 8. |
| 3.3/4 Bmt | 6. | 9.None |
| Bsmt Gar # Cars **0** | | |
| Wet Basement **0** | | |
| 1.Dry | 4. | 7. |
| 2.Damp | 5. | 8. |
| 3.Wet | 6. | 9. |

| | | |
|---|---|---|
| SF Bsmt Living **0** | | |
| Fin Bsmt Grade **0 0** | | |
| OPEN 5 OPTIONAL **0** | | |
| Heat Type **100%** **0** | | |
| 1.HWBB | 5.FWA | 9.No Heat |
| 2.HWCI | 6.GravWA | 10. |
| 3.H Pump | 7.Electric | 11. |
| 4.Steam | 8.Fl/Wall | 12. |
| Cool Type **0%** **9 None** | | |
| 1.Refrig | 4.W&C Air | 7. |
| 2.Evapor | 5. | 8. |
| 3.H Pump | 6. | 9.None |
| Kitchen Style **0** | | |
| 1.Modern | 4.Obsolete | 7. |
| 2.Typical | 5. | 8. |
| 3.Old Type | 6. | 9.None |
| Bath(s) Style **0** | | |
| 1.Modern | 4.Obsolete | 7. |
| 2.Typical | 5. | 8. |
| 3.Old Type | 6. | 9.None |
| # Rooms **0** | | |
| # Bedrooms **0** | | |
| # Full Baths **0** | | |
| # Half Baths **0** | | |
| # Addn Fixtures **0** | | |
| # Fireplaces **0** | | |

TRIO Software
A Division of Harris Computer Systems

| | | |
|---|---|---|
| Layout **0** | | |
| 1.Typical | 4. | 7. |
| 2.Inadeq | 5. | 8. |
| 3.Poor | 6. | 9. |
| Attic **0** | | |
| 1.1/4 Fin | 4.Full Fin | 7. |
| 2.1/2 Fin | 5.Fl/Stair | 8. |
| 3.3/4 Fin | 6. | 9.None |
| Insulation **0** | | |
| 1.Full | 4.Minimal | 7. |
| 2.Heavy | 5.Partial | 8. |
| 3.Capped | 6. | 9.None |
| Unfinished % **0%** | | |
| Grade & Factor **0 0%** | | |
| 1.E Grade | 4.B Grade | 7. |
| 2.D Grade | 5.A Grade | 8.SC Grade |
| 3.C Grade | 6.AA Grade | 9.Same |
| SQFT (Footprint) **0** | | |
| Condition **0** | | |
| 1.Poor | 4.Avg | 7.V G |
| 2.Fair | 5.Avg+ | 8.Exc |
| 3.Avg- | 6.Good | 9.Same |
| Phys. % Good **0%** | | |
| Funct. % Good **100%** | | |
| Functional Code **9 None** | | |
| 1.Incomp | 4.Delap | 7.No Power |
| 2.O-Built | 5.Bsmt | 8.LongTerm |
| 3.Damage | 6.Common | 9.None |
| Econ. % Good **100%** | | |
| Economic Code **None** | | |
| 0.None | 3.No Power | 7. |
| 1.Location | 4.Generate | 8. |
| 2.Encroach | 9.None | 9. |
| Entrance Code **0** | | |
| 1.Interior | 4.Vacant | 7. |
| 2.Refusal | 5.Estimate | 8. |
| 3.Informed | 6.Reviewed | 9. |
| Information Code **0** | | |
| 1.Owner | 4.Agent | 7. |
| 2.Relative | 5.Estimate | 8. |
| 3.Tenant | 6.Other | 9. |

Date Inspected

## Additions, Outbuildings & Improvements

| Type | Year | Units | Grade | Cond | Phys. | Funct. | Sound Value |
|---|---|---|---|---|---|---|---|
| | | | | | % | % | |
| | | | | | % | % | |
| | | | | | % | % | |
| | | | | | % | % | |
| | | | | | % | % | |
| | | | | | % | % | |
| | | | | | % | % | |
| | | | | | % | % | |
| | | | | | % | % | |
| | | | | | % | % | |

1.One Story Fram
2.Two Story Fram
3.Three Story Fr
4.1 & 1/2 Story
5.1 & 3/4 Story
6.2 & 1/2 Story
21.Open Frame Por
22.Encl Frame Por
23.Frame Garage
24.Frame Shed
25.Frame Bay Wind
26.1SFr Overhang
27.Unfin Basement
28.Unfinished Att
29.Finished Attic

Map Lot 004-022 | Account 310 | Location 4 NEW DUNNTOWN ROAD | Card 1 Of 1 | 11/18/2020

ARSENAULT, BOBBY J.

64 WEST GATE ROAD

CARIBOU ME 04736
B4366P216 B5620P198

Previous Owner
ARSENAULT, BOBBY J.
64 WEST GATE ROAD

CARIBOU ME 04736
Sale Date: 3/01/2016

Previous Owner
Cyr, Pauline L.
4 New Dunn Town Road

Washburn ME
Sale Date: 11/09/2006

Inspection Witnessed By:

X Date

| No./Date | Description | Date Insp. |
|---|---|---|
| | | |
| | | |
| | | |

Notes:

**Washburn**

## Property Data

| | |
|---|---|
| Neighborhood | **1 Neighborhood One** |
| Tree Growth Year | **0** |
| 1ST MORTGAGE | **0** |
| 2ND MORTGAGE | **0** |
| Zone/Land Use | **1 Residential** |
| Secondary Zone | |
| Topography | **3 Above Street** |

| | | |
|---|---|---|
| 1.Level | 4.Below St | 7.LevelBog |
| 2.Rolling | 5.Low | 8. |
| 3.Above St | 6.Swampy | 9. |

Utilities **3 Public Sewer** **4 Drilled Well**

| | | |
|---|---|---|
| 1.Public | 4.Dr Well | 7.Cesspool |
| 2.Water | 5.Dug Well | 8. |
| 3.Sewer | 6.Septic | 9.None |

Street **1 Paved**

| | | |
|---|---|---|
| 1.Paved | 4.Proposed | 7. |
| 2.Semi Imp | 5.R/O/W | 8. |
| 3.Gravel | 6. | 9.None |

| | |
|---|---|
| TG PLAN YEAR | **0** |
| Tif District # | **0** |

## Sale Data

| | |
|---|---|
| Sale Date | **11/09/2006** |
| Price | |
| Sale Type | **2 Land & Buildings** |

| | | |
|---|---|---|
| 1.Land | 4.Mobile | 7.C/I L&B |
| 2.L & B | 5.Other | 8. |
| 3.Building | 6.C/I Land | 9. |

Financing **1 Conventional**

| | | |
|---|---|---|
| 1.Convent | 4.Seller | 7. |
| 2.FHA/VA | 5.Private | 8. |
| 3.Assumed | 6.Cash | 9.Unknown |

Validity **1 Arms Length Sale**

| | | |
|---|---|---|
| 1.Valid | 4.Split | 7.Renovate |
| 2.Related | 5.Partial | 8.Other |
| 3.Distress | 6.Exempt | 9. |

Verified **5 Public Record**

| | | |
|---|---|---|
| 1.Buyer | 4.Agent | 7.Family |
| 2.Seller | 5.Pub Rec | 8.Other |
| 3.Lender | 6.MLS | 9. |

## Assessment Record

| Year | Land | Buildings | Exempt | Total |
|---|---|---|---|---|
| 2007 | 4,700 | 36,100 | 0 | 40,800 |
| 2008 | 4,700 | 36,100 | 13,000 | 27,800 |
| 2009 | 4,700 | 36,100 | 9,000 | 31,800 |
| 2012 | 4,700 | 36,100 | 0 | 40,800 |
| 2013 | 6,200 | 36,100 | 0 | 42,300 |
| 2015 | 6,200 | 36,100 | 0 | 42,300 |
| 2018 | 6,200 | 36,100 | 0 | 42,300 |
| 2019 | 9,200 | 55,500 | 0 | 64,700 |
| 2020 | 9,200 | 55,500 | 0 | 64,700 |

## Land Data

| Front Foot | Type | Effective Frontage | Effective Depth | Influence Factor | Influence Code |
|---|---|---|---|---|---|
| 11.Regular Lot | | | | % | |
| 12.Delta Triangle | | | | % | |
| 13.Nabla Triangle | | | | % | |
| 14.Rear Land | | | | % | |
| 15.Class I Road | | | | % | |
| | | | | % | |
| | | | | % | |
| **Square Foot** | | **Square Feet** | | | |
| 16.Class II Road | | | | % | |
| 17.Municipal Rese | | | | % | |
| 18.Munic Sep Lago | | | | % | |
| 19.Gravel Pit | | | | % | |
| 20.Industrial Bas | | | | % | |
| | | | | % | |
| | | | | % | |
| **Fract. Acre** | | **Acreage/Sites** | | | |
| 21.Developed Pave | 21 | 0.31 | | 100 % | 0 |
| 22.Undev Paved (F | | | | % | |
| 23.Developed Grav | | | | % | |
| **Acres** | | | | % | |
| 24.Undev Gravel ( | | | | % | |
| 25.Comm Base Pave | | | | % | |
| 26.Comm Base Grav | | | | % | |
| 27.Backlot | | | | % | |
| 28.Rear Land | | | | % | |
| 29.Pavement | | | | % | |

**Total Acreage** 0.31

### Influence Codes

1.Unimproved
2.Excess Frtg
3.Topography
4.Size/Shape
5.Access
6.Restriction
7.Open Space
8.View/Environ
9.Fract Share
**Acres**
30.Utility R O W
31.Tillable
32.Pasture
33.Orchard
34.Softwood F&O
35.Mixed Wood F&O
36.Hardwood F&O
37.Softwood TG
38.Mixed Wood TG
39.Hardwood TG
40.Wasteland
41.Open Space
42.Mobile Home Si
43.Condo Site
44.Lot Improvemen
45.Subdivision Lo
46.Heavy Ind Sit

# Washburn

Map Lot 004-022 | Account 310 | Location 4 NEW DUNNTOWN ROAD | Card 1 Of 1 | 11/18/2020

| | | | |
|---|---|---|---|
| Building Style | **4 Cape Cod** | | |
| 1.Conv. | 5.Garrison | 9.Gambrel | |
| 2.Ranch | 6.Salt Box | 10.Other | |
| 3.R Ranch | 7.Contemp | 11.Split | |
| 4.Cape | 8.Log | 12. | |
| Dwelling Units | **1** | | |
| Other Units | **0** | | |
| Stories | **4 One & 1/2 Story** | | |
| 1.1 | 4.1.5 | 7. | |
| 2.2 | 5.1.75 | 8. | |
| 3.3 | 6.2.5 | 9. | |
| Exterior Walls | **1 Wood Siding** | | |
| 1.Wood | 5.Stucco | 9.T-111 | |
| 2.Vin/Al | 6.Brick | 10.Other | |
| 3.Compos. | 7.Stone | 11. | |
| 4.Asbestos | 8.Concrete | 12. | |
| Roof Surface | **1 Asphalt Shingles** | | |
| 1.Asphalt | 4.Composit | 7. | |
| 2.Slate | 5.Wood | 8. | |
| 3.Metal | 6.Other | 9. | |
| SF Masonry Trim | **0** | | |
| OPEN-3-CUSTOM | **0** | | |
| OPEN-4-CUSTOM | **0** | | |
| Year Built | **1950** | | |
| Year Remodeled | **0** | | |
| Foundation | **1 Concrete** | | |
| 1.Concrete | 4.Wood | 7. | |
| 2.C Block | 5.Slab | 8. | |
| 3.Br/Stone | 6.Piers | 9. | |
| Basement | **4 Full Basement** | | |
| 1.1/4 Bmt | 4.Full Bmt | 7. | |
| 2.1/2 Bmt | 5.None | 8. | |
| 3.3/4 Bmt | 6. | 9.None | |
| Bsmt Gar # Cars | **0** | | |
| Wet Basement | **3 Wet Basement** | | |
| 1.Dry | 4. | 7. | |
| 2.Damp | 5. | 8. | |
| 3.Wet | 6. | 9. | |

| | | | |
|---|---|---|---|
| SF Bsmt Living | **0** | | |
| Fin Bsmt Grade | **0 0** | | |
| OPEN 5 OPTIONAL | **0** | | |
| Heat Type | **100%** | **5 Forced Warm Air** | |
| 1.HWBB | 5.FWA | 9.No Heat | |
| 2.HWCI | 6.GravWA | 10. | |
| 3.H Pump | 7.Electric | 11. | |
| 4.Steam | 8.Fl/Wall | 12. | |
| Cool Type | **0%** | **9 None** | |
| 1.Refrig | 4.W&C Air | 7. | |
| 2.Evapor | 5. | 8. | |
| 3.H Pump | 6. | 9.None | |
| Kitchen Style | **2 Typical** | | |
| 1.Modern | 4.Obsolete | 7. | |
| 2.Typical | 5. | 8. | |
| 3.Old Type | 6. | 9.None | |
| Bath(s) Style | **2 Typical Bath(s)** | | |
| 1.Modern | 4.Obsolete | 7. | |
| 2.Typical | 5. | 8. | |
| 3.Old Type | 6. | 9.None | |
| # Rooms | **7** | | |
| # Bedrooms | **3** | | |
| # Full Baths | **1** | | |
| # Half Baths | **0** | | |
| # Addn Fixtures | **0** | | |
| # Fireplaces | **0** | | |

TRIO Software
A Division of Harris Computer Systems

| | | | |
|---|---|---|---|
| Layout | **1 Typical** | | |
| 1.Typical | 4. | 7. | |
| 2.Inadeq | 5. | 8. | |
| 3.Poor | 6. | 9. | |
| Attic | **9 None** | | |
| 1.1/4 Fin | 4.Full Fin | 7. | |
| 2.1/2 Fin | 5.Fl/Stair | 8. | |
| 3.3/4 Fin | 6. | 9.None | |
| Insulation | **4 Minimal** | | |
| 1.Full | 4.Minimal | 7. | |
| 2.Heavy | 5.Partial | 8. | |
| 3.Capped | 6. | 9.None | |
| Unfinished % | **0%** | | |
| Grade & Factor | **2 Fair 110%** | | |
| 1.E Grade | 4.B Grade | 7. | |
| 2.D Grade | 5.A Grade | 8.SC Grade | |
| 3.C Grade | 6.AA Grade | 9.Same | |
| SQFT (Footprint) | **475** | | |
| Condition | **5 Above Average** | | |
| 1.Poor | 4.Avg | 7.V G | |
| 2.Fair | 5.Avg+ | 8.Exc | |
| 3.Avg- | 6.Good | 9.Same | |
| Phys. % Good | **0%** | | |
| Funct. % Good | **100%** | | |
| Functional Code | **9 None** | | |
| 1.Incomp | 4.Delap | 7.No Power | |
| 2.O-Built | 5.Bsmt | 8.LongTerm | |
| 3.Damage | 6.Common | 9.None | |
| Econ. % Good | **100%** | | |
| Economic Code | **None** | | |
| 0.None | 3.No Power | 7. | |
| 1.Location | 4.Generate | 8. | |
| 2.Encroach | 9.None | 9. | |
| Entrance Code | **0** | | |
| 1.Interior | 4.Vacant | 7. | |
| 2.Refusal | 5.Estimate | 8. | |
| 3.Informed | 6.Reviewed | 9. | |
| Information Code | **0** | | |
| 1.Owner | 4.Agent | 7. | |
| 2.Relative | 5.Estimate | 8. | |
| 3.Tenant | 6.Other | 9. | |

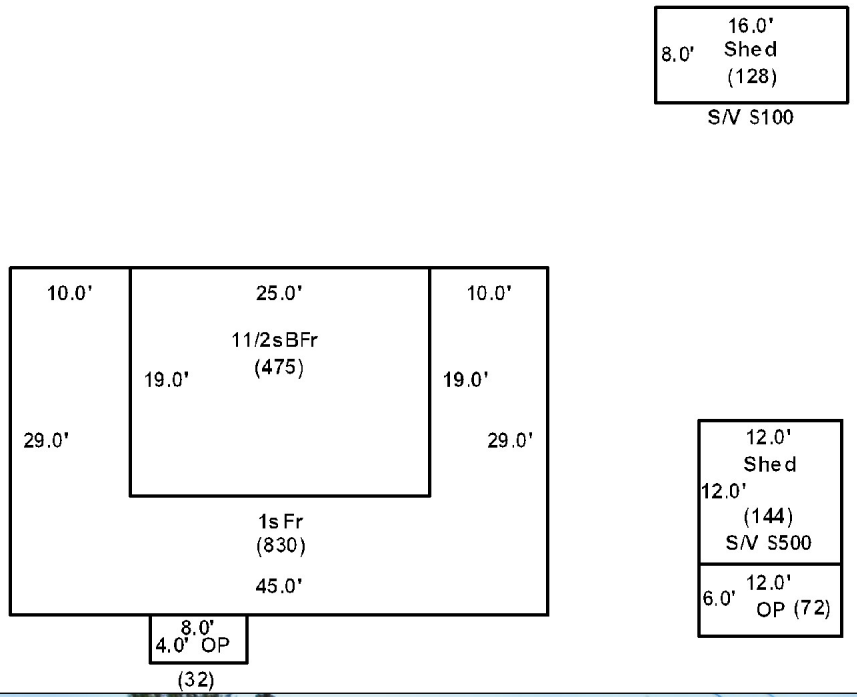


Date Inspected

## Additions, Outbuildings & Improvements

| Type | Year | Units | Grade | Cond | Phys. | Funct. | Sound Value |
|---|---|---|---|---|---|---|---|
| 1 One Story Frame | 0 | 830 | 2 110 | 3 | 0 % | 100 % | |
| 21 Open Frame | 0 | 32 | 2 110 | 3 | 0 % | 100 % | |
| 24 Frame Shed | 0 | | | | % | % | 500 |
| 21 Open Frame | 2000 | 72 | 3 90 | 3 | 0 % | 100 % | |
| 24 Frame Shed | 0 | | | | % | % | 100 |
| | | | | | % | % | |
| | | | | | % | % | |
| | | | | | % | % | |
| | | | | | % | % | |
| | | | | | % | % | |

1.One Story Fram
2.Two Story Fram
3.Three Story Fr
4.1 & 1/2 Story
5.1 & 3/4 Story
6.2 & 1/2 Story
21.Open Frame Por
22.Encl Frame Por
23.Frame Garage
24.Frame Shed
25.Frame Bay Wind
26.1SFr Overhang
27.Unfin Basement
28.Unfinished Att
29.Finished Attic

Map Lot 004-023 Account 757 Location 8 NEW DUNNTOWN ROAD Card 1 Of 1 11/18/2020

McNEAL, JOSEPH W.
McNEAL, BARBARA J.
8 NEW DUNNTOWN ROAD

WASHBURN ME 04786
B2669P297

## Property Data

Neighborhood **1 Neighborhood One**

Tree Growth Year **0**

1ST MORTGAGE **0**

2ND MORTGAGE **0**

Zone/Land Use **1 Residential**

Secondary Zone

Topography **3 Above Street**

| | | |
|---|---|---|
| 1.Level | 4.Below St | 7.LevelBog |
| 2.Rolling | 5.Low | 8. |
| 3.Above St | 6.Swampy | 9. |

Utilities **2 Public Water** **6 Septic System**

| | | |
|---|---|---|
| 1.Public | 4.Dr Well | 7.Cesspool |
| 2.Water | 5.Dug Well | 8. |
| 3.Sewer | 6.Septic | 9.None |

Street **1 Paved**

| | | |
|---|---|---|
| 1.Paved | 4.Proposed | 7. |
| 2.Semi Imp | 5.R/O/W | 8. |
| 3.Gravel | 6. | 9.None |

TG PLAN YEAR **0**

Tif District # **0**

## Sale Data

Sale Date **4/01/1994**

Price **5,000**

Sale Type **2 Land & Buildings**

| | | |
|---|---|---|
| 1.Land | 4.Mobile | 7.C/I L&B |
| 2.L & B | 5.Other | 8. |
| 3.Building | 6.C/I Land | 9. |

Financing

| | | |
|---|---|---|
| 1.Convent | 4.Seller | 7. |
| 2.FHA/VA | 5.Private | 8. |
| 3.Assumed | 6.Cash | 9.Unknown |

Validity **1 Arms Length Sale**

| | | |
|---|---|---|
| 1.Valid | 4.Split | 7.Renovate |
| 2.Related | 5.Partial | 8.Other |
| 3.Distress | 6.Exempt | 9. |

Verified **5 Public Record**

| | | |
|---|---|---|
| 1.Buyer | 4.Agent | 7.Family |
| 2.Seller | 5.Pub Rec | 8.Other |
| 3.Lender | 6.MLS | 9. |

## Assessment Record

| Year | Land | Buildings | Exempt | Total |
|---|---|---|---|---|
| 2007 | 4,500 | 17,800 | 13,000 | 9,300 |
| 2008 | 4,500 | 17,800 | 13,000 | 9,300 |
| 2009 | 4,500 | 17,800 | 9,000 | 13,300 |
| 2012 | 4,500 | 17,800 | 8,800 | 13,500 |
| 2013 | 5,900 | 17,800 | 8,800 | 14,900 |
| 2015 | 5,900 | 17,800 | 9,000 | 14,700 |
| 2018 | 5,900 | 17,800 | 18,400 | 5,300 |
| 2019 | 8,700 | 11,800 | 20,000 | 500 |
| 2020 | 8,700 | 11,800 | 20,500 | 0 |

## Land Data

| Front Foot | Type | Effective Frontage | Effective Depth | Influence Factor | Influence Code |
|---|---|---|---|---|---|
| 11.Regular Lot | | | | % | |
| 12.Delta Triangle | | | | % | |
| 13.Nabla Triangle | | | | % | |
| 14.Rear Land | | | | % | |
| 15.Class I Road | | | | % | |
| | | | | % | |
| | | | | % | |
| **Square Foot** | | **Square Feet** | | | |
| 16.Class II Road | | | | % | |
| 17.Municipal Rese | | | | % | |
| 18.Munic Sep Lago | | | | % | |
| 19.Gravel Pit | | | | % | |
| 20.Industrial Bas | | | | % | |
| | | | | % | |
| | | | | % | |
| **Fract. Acre** | | **Acreage/Sites** | | | |
| 21.Developed Pave | 21 | 0.28 | | 100 % | 0 |
| 22.Undev Paved (F | | | | % | |
| 23.Developed Grav | | | | % | |
| **Acres** | | | | % | |
| 24.Undev Gravel ( | | | | % | |
| 25.Comm Base Pave | | | | % | |
| 26.Comm Base Grav | | | | % | |
| 27.Backlot | | | | % | |
| 28.Rear Land | | | | % | |
| 29.Pavement | | | | % | |

**Total Acreage** 0.28

### Influence Codes

1.Unimproved
2.Excess Frtg
3.Topography
4.Size/Shape
5.Access
6.Restriction
7.Open Space
8.View/Environ
9.Fract Share
**Acres**
30.Utility R O W
31.Tillable
32.Pasture
33.Orchard
34.Softwood F&O
35.Mixed Wood F&O
36.Hardwood F&O
37.Softwood TG
38.Mixed Wood TG
39.Hardwood TG
40.Wasteland
41.Open Space
42.Mobile Home Si
43.Condo Site
44.Lot Improvemen
45.Subdivision Lo
46.Heavy Ind Sit

Inspection Witnessed By:

X Date

| No./Date | Description | Date Insp. |
|---|---|---|
| | | |
| | | |
| | | |

Notes:

**Washburn**

# Washburn

Map Lot 004-023 | Account 757 | Location 8 NEW DUNNTOWN ROAD | Card 1 Of 1 | 11/18/2020

| | | |
|---|---|---|
| Building Style **0** | | |
| 1.Conv. | 5.Garrison | 9.Gambrel |
| 2.Ranch | 6.Salt Box | 10.Other |
| 3.R Ranch | 7.Contemp | 11.Split |
| 4.Cape | 8.Log | 12. |
| Dwelling Units **0** | | |
| Other Units **0** | | |
| Stories **0** | | |
| 1.1 | 4.1.5 | 7. |
| 2.2 | 5.1.75 | 8. |
| 3.3 | 6.2.5 | 9. |
| Exterior Walls **0** | | |
| 1.Wood | 5.Stucco | 9.T-111 |
| 2.Vin/Al | 6.Brick | 10.Other |
| 3.Compos. | 7.Stone | 11. |
| 4.Asbestos | 8.Concrete | 12. |
| Roof Surface **0** | | |
| 1.Asphalt | 4.Composit | 7. |
| 2.Slate | 5.Wood | 8. |
| 3.Metal | 6.Other | 9. |
| SF Masonry Trim **0** | | |
| OPEN-3-CUSTOM **0** | | |
| OPEN-4-CUSTOM **0** | | |
| Year Built **0** | | |
| Year Remodeled **0** | | |
| Foundation **0** | | |
| 1.Concrete | 4.Wood | 7. |
| 2.C Block | 5.Slab | 8. |
| 3.Br/Stone | 6.Piers | 9. |
| Basement **0** | | |
| 1.1/4 Bmt | 4.Full Bmt | 7. |
| 2.1/2 Bmt | 5.None | 8. |
| 3.3/4 Bmt | 6. | 9.None |
| Bsmt Gar # Cars **0** | | |
| Wet Basement **0** | | |
| 1.Dry | 4. | 7. |
| 2.Damp | 5. | 8. |
| 3.Wet | 6. | 9. |

| | | |
|---|---|---|
| SF Bsmt Living **0** | | |
| Fin Bsmt Grade **0 0** | | |
| OPEN 5 OPTIONAL **0** | | |
| Heat Type **100%** **0** | | |
| 1.HWBB | 5.FWA | 9.No Heat |
| 2.HWCI | 6.GravWA | 10. |
| 3.H Pump | 7.Electric | 11. |
| 4.Steam | 8.Fl/Wall | 12. |
| Cool Type **0%** | **9 None** | |
| 1.Refrig | 4.W&C Air | 7. |
| 2.Evapor | 5. | 8. |
| 3.H Pump | 6. | 9.None |
| Kitchen Style **0** | | |
| 1.Modern | 4.Obsolete | 7. |
| 2.Typical | 5. | 8. |
| 3.Old Type | 6. | 9.None |
| Bath(s) Style **0** | | |
| 1.Modern | 4.Obsolete | 7. |
| 2.Typical | 5. | 8. |
| 3.Old Type | 6. | 9.None |
| # Rooms **0** | | |
| # Bedrooms **0** | | |
| # Full Baths **0** | | |
| # Half Baths **0** | | |
| # Addn Fixtures **0** | | |
| # Fireplaces **0** | | |

TRIO Software
A Division of Harris Computer Systems

| | | |
|---|---|---|
| Layout **0** | | |
| 1.Typical | 4. | 7. |
| 2.Inadeq | 5. | 8. |
| 3.Poor | 6. | 9. |
| Attic **0** | | |
| 1.1/4 Fin | 4.Full Fin | 7. |
| 2.1/2 Fin | 5.Fl/Stair | 8. |
| 3.3/4 Fin | 6. | 9.None |
| Insulation **0** | | |
| 1.Full | 4.Minimal | 7. |
| 2.Heavy | 5.Partial | 8. |
| 3.Capped | 6. | 9.None |
| Unfinished % **0%** | | |
| Grade & Factor **0 0%** | | |
| 1.E Grade | 4.B Grade | 7. |
| 2.D Grade | 5.A Grade | 8.SC Grade |
| 3.C Grade | 6.AA Grade | 9.Same |
| SQFT (Footprint) **0** | | |
| Condition **0** | | |
| 1.Poor | 4.Avg | 7.V G |
| 2.Fair | 5.Avg+ | 8.Exc |
| 3.Avg- | 6.Good | 9.Same |
| Phys. % Good **0%** | | |
| Funct. % Good **100%** | | |
| Functional Code **9 None** | | |
| 1.Incomp | 4.Delap | 7.No Power |
| 2.O-Built | 5.Bsmt | 8.LongTerm |
| 3.Damage | 6.Common | 9.None |
| Econ. % Good **100%** | | |
| Economic Code **None** | | |
| 0.None | 3.No Power | 7. |
| 1.Location | 4.Generate | 8. |
| 2.Encroach | 9.None | 9. |
| Entrance Code **0** | | |
| 1.Interior | 4.Vacant | 7. |
| 2.Refusal | 5.Estimate | 8. |
| 3.Informed | 6.Reviewed | 9. |
| Information Code **0** | | |
| 1.Owner | 4.Agent | 7. |
| 2.Relative | 5.Estimate | 8. |
| 3.Tenant | 6.Other | 9. |

Date Inspected

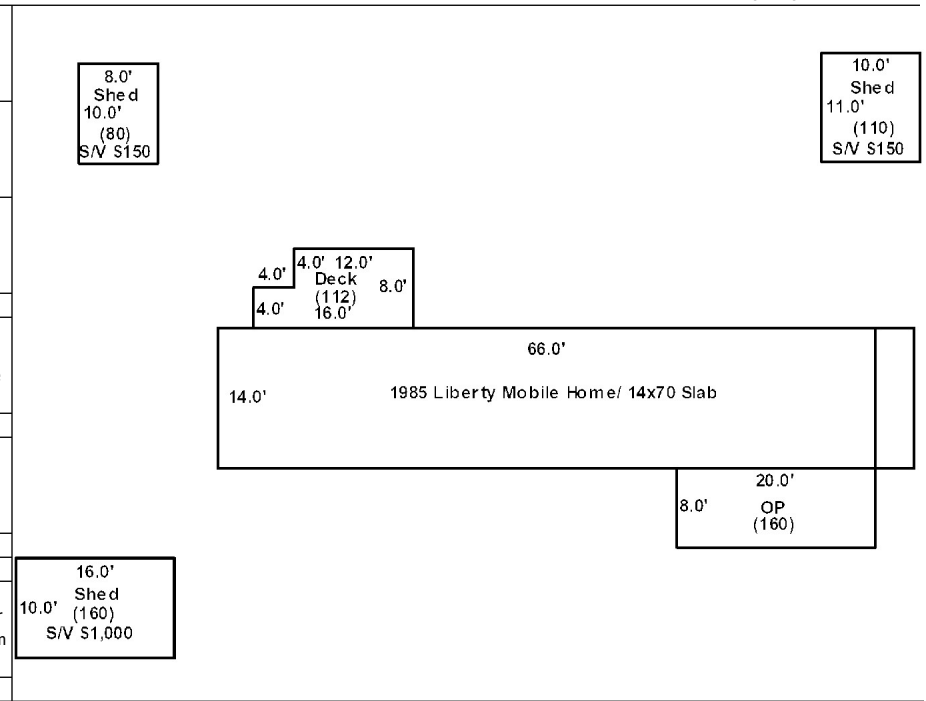


## Additions, Outbuildings & Improvements

| Type | Year | Units | Grade | Cond | Phys. | Funct. | Sound Value |
|---|---|---|---|---|---|---|---|
| 842 Liberty M/H | 1985 | 14x66 | 4 100 | 3 | 0 % | 100 % | |
| 21 Open Frame | 2000 | 160 | 3 95 | 4 | 0 % | 100 % | |
| 68 Wood Deck | 2000 | 112 | 3 100 | 4 | 0 % | 100 % | |
| 24 Frame Shed | 0 | | | | % | % | 1,000 |
| 24 Frame Shed | 0 | | | | % | % | 150 |
| 24 Frame Shed | 0 | | | | % | % | 150 |
| 48 Concrete Slab | 1985 | 980 | 3 100 | 4 | 0 % | 100 % | |
| | | | | | % | % | |
| | | | | | % | % | |
| | | | | | % | % | |

1.One Story Fram
2.Two Story Fram
3.Three Story Fr
4.1 & 1/2 Story
5.1 & 3/4 Story
6.2 & 1/2 Story
21.Open Frame Por
22.Encl Frame Por
23.Frame Garage
24.Frame Shed
25.Frame Bay Wind
26.1SFr Overhang
27.Unfin Basement
28.Unfinished Att
29.Finished Attic

Map Lot 004-024 | Account 188 | Location 14 NEW DUNNTOWN ROAD | Card 1 Of 1 | 11/18/2020

CRONIN, MELISSA M.

P.O. BOX 436

WASHBURN ME 04786
B5511P35

Previous Owner
FLEMING, SHEILA L.
P.O. BOX 116

WASHBURN ME 04786
Sale Date: 1/22/2016

Previous Owner
Chapman, Bruce
16 Caton Road

Raymond ME
Sale Date: 5/05/2006

Inspection Witnessed By:

X Date

| No./Date | Description | Date Insp. |
|---|---|---|
| | | |
| | | |
| | | |

Notes:
*At time of reval. the bsmt was supported by beams to keep it from caving in -10% fnal.

**Washburn**

## Property Data

Neighborhood **1 Neighborhood One**

Tree Growth Year **0**

1ST MORTGAGE **0**

2ND MORTGAGE **0**

Zone/Land Use **1 Residential**

Secondary Zone

Topography **3 Above Street**

| | | |
|---|---|---|
| 1.Level | 4.Below St | 7.LevelBog |
| 2.Rolling | 5.Low | 8. |
| 3.Above St | 6.Swampy | 9. |

Utilities **2 Public Water** **6 Septic System**

| | | |
|---|---|---|
| 1.Public | 4.Dr Well | 7.Cesspool |
| 2.Water | 5.Dug Well | 8. |
| 3.Sewer | 6.Septic | 9.None |

Street **1 Paved**

| | | |
|---|---|---|
| 1.Paved | 4.Proposed | 7. |
| 2.Semi Imp | 5.R/O/W | 8. |
| 3.Gravel | 6. | 9.None |

TG PLAN YEAR **0**

Tif District # **0**

## Sale Data

Sale Date **1/22/2016**

Price

Sale Type **2 Land & Buildings**

| | | |
|---|---|---|
| 1.Land | 4.Mobile | 7.C/I L&B |
| 2.L & B | 5.Other | 8. |
| 3.Building | 6.C/I Land | 9. |

Financing

| | | |
|---|---|---|
| 1.Convent | 4.Seller | 7. |
| 2.FHA/VA | 5.Private | 8. |
| 3.Assumed | 6.Cash | 9.Unknown |

Validity **2 Related Parties**

| | | |
|---|---|---|
| 1.Valid | 4.Split | 7.Renovate |
| 2.Related | 5.Partial | 8.Other |
| 3.Distress | 6.Exempt | 9. |

Verified **5 Public Record**

| | | |
|---|---|---|
| 1.Buyer | 4.Agent | 7.Family |
| 2.Seller | 5.Pub Rec | 8.Other |
| 3.Lender | 6.MLS | 9. |

## Assessment Record

| Year | Land | Buildings | Exempt | Total |
|---|---|---|---|---|
| 2007 | 6,100 | 34,700 | 13,000 | 27,800 |
| 2008 | 6,100 | 34,700 | 13,000 | 27,800 |
| 2009 | 6,100 | 34,700 | 9,000 | 31,800 |
| 2012 | 6,100 | 34,700 | 8,800 | 32,000 |
| 2013 | 7,900 | 34,700 | 8,800 | 33,800 |
| 2015 | 7,900 | 34,700 | 0 | 42,600 |
| 2018 | 7,900 | 34,700 | 18,400 | 24,200 |
| 2019 | 12,200 | 29,100 | 20,000 | 21,300 |
| 2020 | 12,200 | 29,100 | 25,000 | 16,300 |

## Land Data

| Front Foot | Type | Effective Frontage | Effective Depth | Influence Factor | Influence Code |
|---|---|---|---|---|---|
| 11.Regular Lot | | | | % | |
| 12.Delta Triangle | | | | % | |
| 13.Nabla Triangle | | | | % | |
| 14.Rear Land | | | | % | |
| 15.Class I Road | | | | % | |
| | | | | % | |
| | | | | % | |
| **Square Foot** | | **Square Feet** | | | |
| 16.Class II Road | 29 | 300 | | 75 % | 0 |
| 17.Municipal Rese | | | | % | |
| 18.Munic Sep Lago | | | | % | |
| 19.Gravel Pit | | | | % | |
| 20.Industrial Bas | | | | % | |
| | | | | % | |
| | | | | % | |
| **Fract. Acre** | | **Acreage/Sites** | | | |
| 21.Developed Pave | 21 | 0.50 | | 100 % | 0 |
| 22.Undev Paved (F | | | | % | |
| 23.Developed Grav | | | | % | |
| **Acres** | | | | % | |
| 24.Undev Gravel ( | | | | % | |
| 25.Comm Base Pave | | | | % | |
| 26.Comm Base Grav | | | | % | |
| 27.Backlot | | | | % | |
| 28.Rear Land | | | | % | |
| 29.Pavement | | | | % | |

**Total Acreage** 0.50

### Influence Codes

1.Unimproved
2.Excess Frtg
3.Topography
4.Size/Shape
5.Access
6.Restriction
7.Open Space
8.View/Environ
9.Fract Share
**Acres**
30.Utility R O W
31.Tillable
32.Pasture
33.Orchard
34.Softwood F&O
35.Mixed Wood F&O
36.Hardwood F&O
37.Softwood TG
38.Mixed Wood TG
39.Hardwood TG
40.Wasteland
41.Open Space
42.Mobile Home Si
43.Condo Site
44.Lot Improvemen
45.Subdivision Lo
46.Heavy Ind Sit

# Washburn

Map Lot 004-024 | Account 188 | Location 14 NEW DUNNTOWN ROAD | Card 1 Of 1 | 11/18/2020

| | | | |
|---|---|---|---|
| Building Style | **2 Ranch** | | |
| 1.Conv. | 5.Garrison | 9.Gambrel | |
| 2.Ranch | 6.Salt Box | 10.Other | |
| 3.R Ranch | 7.Contemp | 11.Split | |
| 4.Cape | 8.Log | 12. | |
| Dwelling Units | **1** | | |
| Other Units | **0** | | |
| Stories | **1 One Story** | | |
| 1.1 | 4.1.5 | 7. | |
| 2.2 | 5.1.75 | 8. | |
| 3.3 | 6.2.5 | 9. | |
| Exterior Walls | **2 Vinyl/Aluminum** | | |
| 1.Wood | 5.Stucco | 9.T-111 | |
| 2.Vin/Al | 6.Brick | 10.Other | |
| 3.Compos. | 7.Stone | 11. | |
| 4.Asbestos | 8.Concrete | 12. | |
| Roof Surface | **1 Asphalt Shingles** | | |
| 1.Asphalt | 4.Composit | 7. | |
| 2.Slate | 5.Wood | 8. | |
| 3.Metal | 6.Other | 9. | |
| SF Masonry Trim | **0** | | |
| OPEN-3-CUSTOM | **0** | | |
| OPEN-4-CUSTOM | **0** | | |
| Year Built | **1960** | | |
| Year Remodeled | **0** | | |
| Foundation | **1 Concrete** | | |
| 1.Concrete | 4.Wood | 7. | |
| 2.C Block | 5.Slab | 8. | |
| 3.Br/Stone | 6.Piers | 9. | |
| Basement | **4 Full Basement** | | |
| 1.1/4 Bmt | 4.Full Bmt | 7. | |
| 2.1/2 Bmt | 5.None | 8. | |
| 3.3/4 Bmt | 6. | 9.None | |
| Bsmt Gar # Cars | **0** | | |
| Wet Basement | **3 Wet Basement** | | |
| 1.Dry | 4. | 7. | |
| 2.Damp | 5. | 8. | |
| 3.Wet | 6. | 9. | |

| | | | |
|---|---|---|---|
| SF Bsmt Living | **0** | | |
| Fin Bsmt Grade | **0 0** | | |
| OPEN 5 OPTIONAL | **0** | | |
| Heat Type | **100%** | **5 Forced Warm Air** | |
| 1.HWBB | 5.FWA | 9.No Heat | |
| 2.HWCI | 6.GravWA | 10. | |
| 3.H Pump | 7.Electric | 11. | |
| 4.Steam | 8.Fl/Wall | 12. | |
| Cool Type | **0%** | **9 None** | |
| 1.Refrig | 4.W&C Air | 7. | |
| 2.Evapor | 5. | 8. | |
| 3.H Pump | 6. | 9.None | |
| Kitchen Style | **2 Typical** | | |
| 1.Modern | 4.Obsolete | 7. | |
| 2.Typical | 5. | 8. | |
| 3.Old Type | 6. | 9.None | |
| Bath(s) Style | **2 Typical Bath(s)** | | |
| 1.Modern | 4.Obsolete | 7. | |
| 2.Typical | 5. | 8. | |
| 3.Old Type | 6. | 9.None | |
| # Rooms | **4** | | |
| # Bedrooms | **2** | | |
| # Full Baths | **1** | | |
| # Half Baths | **0** | | |
| # Addn Fixtures | **0** | | |
| # Fireplaces | **0** | | |

TRIO Software
A Division of Harris Computer Systems

| | | | |
|---|---|---|---|
| Layout | **1 Typical** | | |
| 1.Typical | 4. | 7. | |
| 2.Inadeq | 5. | 8. | |
| 3.Poor | 6. | 9. | |
| Attic | **9 None** | | |
| 1.1/4 Fin | 4.Full Fin | 7. | |
| 2.1/2 Fin | 5.Fl/Stair | 8. | |
| 3.3/4 Fin | 6. | 9.None | |
| Insulation | **4 Minimal** | | |
| 1.Full | 4.Minimal | 7. | |
| 2.Heavy | 5.Partial | 8. | |
| 3.Capped | 6. | 9.None | |
| Unfinished % | **0%** | | |
| Grade & Factor | **2 Fair 105%** | | |
| 1.E Grade | 4.B Grade | 7. | |
| 2.D Grade | 5.A Grade | 8.SC Grade | |
| 3.C Grade | 6.AA Grade | 9.Same | |
| SQFT (Footprint) | **936** | | |
| Condition | **4 Average** | | |
| 1.Poor | 4.Avg | 7.V G | |
| 2.Fair | 5.Avg+ | 8.Exc | |
| 3.Avg- | 6.Good | 9.Same | |
| Phys. % Good | **0%** | | |
| Funct. % Good | **90%** | | |
| Functional Code | **5 Basement** | | |
| 1.Incomp | 4.Delap | 7.No Power | |
| 2.O-Built | 5.Bsmt | 8.LongTerm | |
| 3.Damage | 6.Common | 9.None | |
| Econ. % Good | **100%** | | |
| Economic Code | **None** | | |
| 0.None | 3.No Power | 7. | |
| 1.Location | 4.Generate | 8. | |
| 2.Encroach | 9.None | 9. | |
| Entrance Code | **1 Interior Inspect** | | |
| 1.Interior | 4.Vacant | 7. | |
| 2.Refusal | 5.Estimate | 8. | |
| 3.Informed | 6.Reviewed | 9. | |
| Information Code | **1 Owner** | | |
| 1.Owner | 4.Agent | 7. | |
| 2.Relative | 5.Estimate | 8. | |
| 3.Tenant | 6.Other | 9. | |

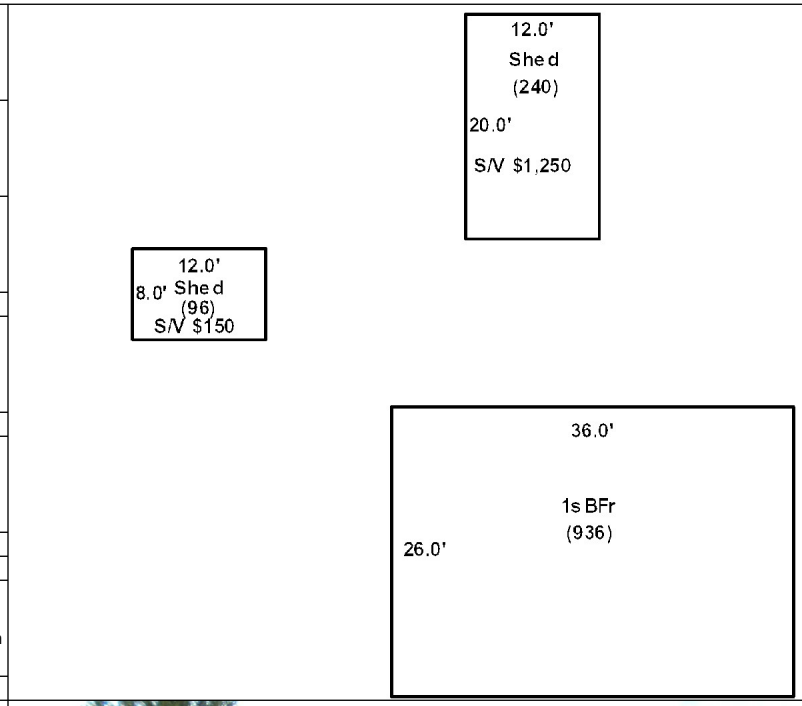


Date Inspected 9/02/2018

## Additions, Outbuildings & Improvements

| Type | Year | Units | Grade | Cond | Phys. | Funct. | Sound Value |
|---|---|---|---|---|---|---|---|
| 24 Frame Shed | 0 | | | | % | % | 150 |
| 24 Frame Shed | 0 | | | | % | % | 1,250 |
| | | | | | % | % | |
| | | | | | % | % | |
| | | | | | % | % | |
| | | | | | % | % | |
| | | | | | % | % | |
| | | | | | % | % | |
| | | | | | % | % | |
| | | | | | % | % | |

1.One Story Fram
2.Two Story Fram
3.Three Story Fr
4.1 & 1/2 Story
5.1 & 3/4 Story
6.2 & 1/2 Story
21.Open Frame Por
22.Encl Frame Por
23.Frame Garage
24.Frame Shed
25.Frame Bay Wind
26.1SFr Overhang
27.Unfin Basement
28.Unfinished Att
29.Finished Attic

Map Lot 004-025 | Account 797 | Location 20 NEW DUNNTOWN ROAD | Card 1 Of 1 | 11/18/2020

WOOD, MICHAEL J.
WOOD, LINDA M.
P.O. BOX 321

WASHBURN ME 04786
B4885P229 B4885P231

Previous Owner
Russell, Richard T.
2 South Caribou Road

Fort Fairfield ME 04742 3005
Sale Date: 11/12/2010

Inspection Witnessed By:

X Date

| No./Date | Description | Date Insp. |
|---|---|---|
| | | |
| | | |
| | | |

Notes:

## Property Data

| | |
|---|---|
| Neighborhood | **1 Neighborhood One** |
| Tree Growth Year | **0** |
| 1ST MORTGAGE | **0** |
| 2ND MORTGAGE | **0** |
| Zone/Land Use | **1 Residential** |
| Secondary Zone | |
| Topography | **1 Level** |

| | | |
|---|---|---|
| 1.Level | 4.Below St | 7.LevelBog |
| 2.Rolling | 5.Low | 8. |
| 3.Above St | 6.Swampy | 9. |

Utilities **2 Public Water** **6 Septic System**

| | | |
|---|---|---|
| 1.Public | 4.Dr Well | 7.Cesspool |
| 2.Water | 5.Dug Well | 8. |
| 3.Sewer | 6.Septic | 9.None |

Street **1 Paved**

| | | |
|---|---|---|
| 1.Paved | 4.Proposed | 7. |
| 2.Semi Imp | 5.R/O/W | 8. |
| 3.Gravel | 6. | 9.None |

| | |
|---|---|
| TG PLAN YEAR | **0** |
| Tif District # | **0** |

## Sale Data

| | |
|---|---|
| Sale Date | **11/12/2010** |
| Price | **95,000** |

Sale Type **2 Land & Buildings**

| | | |
|---|---|---|
| 1.Land | 4.Mobile | 7.C/I L&B |
| 2.L & B | 5.Other | 8. |
| 3.Building | 6.C/I Land | 9. |

Financing **1 Conventional**

| | | |
|---|---|---|
| 1.Convent | 4.Seller | 7. |
| 2.FHA/VA | 5.Private | 8. |
| 3.Assumed | 6.Cash | 9.Unknown |

Validity **1 Arms Length Sale**

| | | |
|---|---|---|
| 1.Valid | 4.Split | 7.Renovate |
| 2.Related | 5.Partial | 8.Other |
| 3.Distress | 6.Exempt | 9. |

Verified **5 Public Record**

| | | |
|---|---|---|
| 1.Buyer | 4.Agent | 7.Family |
| 2.Seller | 5.Pub Rec | 8.Other |
| 3.Lender | 6.MLS | 9. |

## Assessment Record

| Year | Land | Buildings | Exempt | Total |
|---|---|---|---|---|
| 2007 | 7,800 | 64,500 | 18,000 | 54,300 |
| 2008 | 7,800 | 64,500 | 19,000 | 53,300 |
| 2009 | 7,800 | 64,500 | 0 | 72,300 |
| 2012 | 7,800 | 71,900 | 8,800 | 70,900 |
| 2013 | 10,200 | 71,900 | 8,800 | 73,300 |
| 2015 | 10,200 | 71,900 | 9,000 | 73,100 |
| 2018 | 10,200 | 71,900 | 18,400 | 63,700 |
| 2019 | 14,400 | 65,000 | 20,000 | 59,400 |
| 2020 | 14,400 | 64,900 | 25,000 | 54,300 |

## Land Data

| Front Foot | Type | Effective Frontage | Effective Depth | Influence Factor | Influence Code |
|---|---|---|---|---|---|
| 11.Regular Lot | | | | % | |
| 12.Delta Triangle | | | | % | |
| 13.Nabla Triangle | | | | % | |
| 14.Rear Land | | | | % | |
| 15.Class I Road | | | | % | |
| | | | | % | |
| | | | | % | |
| **Square Foot** | | **Square Feet** | | | |
| 16.Class II Road | | | | % | |
| 17.Municipal Rese | | | | % | |
| 18.Munic Sep Lago | | | | % | |
| 19.Gravel Pit | | | | % | |
| 20.Industrial Bas | | | | % | |
| | | | | % | |
| | | | | % | |
| **Fract. Acre** | | **Acreage/Sites** | | | |
| 21.Developed Pave | 21 | 0.76 | | 100 % | 0 |
| 22.Undev Paved (F | | | | % | |
| 23.Developed Grav | | | | % | |
| **Acres** | | | | % | |
| 24.Undev Gravel ( | | | | % | |
| 25.Comm Base Pave | | | | % | |
| 26.Comm Base Grav | | | | % | |
| 27.Backlot | | | | % | |
| 28.Rear Land | | | | % | |
| 29.Pavement | | | | % | |

**Total Acreage** 0.76

### Influence Codes

1.Unimproved
2.Excess Frtg
3.Topography
4.Size/Shape
5.Access
6.Restriction
7.Open Space
8.View/Environ
9.Fract Share
**Acres**
30.Utility R O W
31.Tillable
32.Pasture
33.Orchard
34.Softwood F&O
35.Mixed Wood F&O
36.Hardwood F&O
37.Softwood TG
38.Mixed Wood TG
39.Hardwood TG
40.Wasteland
41.Open Space
42.Mobile Home Si
43.Condo Site
44.Lot Improvemen
45.Subdivision Lo
46.Heavy Ind Sit

**Washburn**

# Washburn

Map Lot 004-025 | Account 797 | Location 20 NEW DUNNTOWN ROAD | Card 1 Of 1 | 11/18/2020

| | | | |
|---|---|---|---|
| Building Style | **2 Ranch** | | |
| 1.Conv. | 5.Garrison | 9.Gambrel | |
| 2.Ranch | 6.Salt Box | 10.Other | |
| 3.R Ranch | 7.Contemp | 11.Split | |
| 4.Cape | 8.Log | 12. | |
| Dwelling Units | **1** | | |
| Other Units | **0** | | |
| Stories | **1 One Story** | | |
| 1.1 | 4.1.5 | 7. | |
| 2.2 | 5.1.75 | 8. | |
| 3.3 | 6.2.5 | 9. | |
| Exterior Walls | **2 Vinyl/Aluminum** | | |
| 1.Wood | 5.Stucco | 9.T-111 | |
| 2.Vin/Al | 6.Brick | 10.Other | |
| 3.Compos. | 7.Stone | 11. | |
| 4.Asbestos | 8.Concrete | 12. | |
| Roof Surface | **1 Asphalt Shingles** | | |
| 1.Asphalt | 4.Composit | 7. | |
| 2.Slate | 5.Wood | 8. | |
| 3.Metal | 6.Other | 9. | |
| SF Masonry Trim | **0** | | |
| OPEN-3-CUSTOM | **0** | | |
| OPEN-4-CUSTOM | **0** | | |
| Year Built | **1970** | | |
| Year Remodeled | **0** | | |
| Foundation | **1 Concrete** | | |
| 1.Concrete | 4.Wood | 7. | |
| 2.C Block | 5.Slab | 8. | |
| 3.Br/Stone | 6.Piers | 9. | |
| Basement | **4 Full Basement** | | |
| 1.1/4 Bmt | 4.Full Bmt | 7. | |
| 2.1/2 Bmt | 5.None | 8. | |
| 3.3/4 Bmt | 6. | 9.None | |
| Bsmt Gar # Cars | **0** | | |
| Wet Basement | **3 Wet Basement** | | |
| 1.Dry | 4. | 7. | |
| 2.Damp | 5. | 8. | |
| 3.Wet | 6. | 9. | |

| | | | |
|---|---|---|---|
| SF Bsmt Living | **0** | | |
| Fin Bsmt Grade | **0 0** | | |
| OPEN 5 OPTIONAL | **0** | | |
| Heat Type | **100%** | **5 Forced Warm Air** | |
| 1.HWBB | 5.FWA | 9.No Heat | |
| 2.HWCI | 6.GravWA | 10. | |
| 3.H Pump | 7.Electric | 11. | |
| 4.Steam | 8.Fl/Wall | 12. | |
| Cool Type | **0%** | **9 None** | |
| 1.Refrig | 4.W&C Air | 7. | |
| 2.Evapor | 5. | 8. | |
| 3.H Pump | 6. | 9.None | |
| Kitchen Style | **2 Typical** | | |
| 1.Modern | 4.Obsolete | 7. | |
| 2.Typical | 5. | 8. | |
| 3.Old Type | 6. | 9.None | |
| Bath(s) Style | **2 Typical Bath(s)** | | |
| 1.Modern | 4.Obsolete | 7. | |
| 2.Typical | 5. | 8. | |
| 3.Old Type | 6. | 9.None | |
| # Rooms | **6** | | |
| # Bedrooms | **4** | | |
| # Full Baths | **1** | | |
| # Half Baths | **0** | | |
| # Addn Fixtures | **0** | | |
| # Fireplaces | **0** | | |

TRIO Software
A Division of Harris Computer Systems

| | | | |
|---|---|---|---|
| Layout | **1 Typical** | | |
| 1.Typical | 4. | 7. | |
| 2.Inadeq | 5. | 8. | |
| 3.Poor | 6. | 9. | |
| Attic | **9 None** | | |
| 1.1/4 Fin | 4.Full Fin | 7. | |
| 2.1/2 Fin | 5.Fl/Stair | 8. | |
| 3.3/4 Fin | 6. | 9.None | |
| Insulation | **1 Full** | | |
| 1.Full | 4.Minimal | 7. | |
| 2.Heavy | 5.Partial | 8. | |
| 3.Capped | 6. | 9.None | |
| Unfinished % | **0%** | | |
| Grade & Factor | **3 Average 110%** | | |
| 1.E Grade | 4.B Grade | 7. | |
| 2.D Grade | 5.A Grade | 8.SC Grade | |
| 3.C Grade | 6.AA Grade | 9.Same | |
| SQFT (Footprint) | **1134** | | |
| Condition | **6 Good** | | |
| 1.Poor | 4.Avg | 7.V G | |
| 2.Fair | 5.Avg+ | 8.Exc | |
| 3.Avg- | 6.Good | 9.Same | |
| Phys. % Good | **0%** | | |
| Funct. % Good | **100%** | | |
| Functional Code | **9 None** | | |
| 1.Incomp | 4.Delap | 7.No Power | |
| 2.O-Built | 5.Bsmt | 8.LongTerm | |
| 3.Damage | 6.Common | 9.None | |
| Econ. % Good | **100%** | | |
| Economic Code | **None** | | |
| 0.None | 3.No Power | 7. | |
| 1.Location | 4.Generate | 8. | |
| 2.Encroach | 9.None | 9. | |
| Entrance Code | **5 Estimated** | | |
| 1.Interior | 4.Vacant | 7. | |
| 2.Refusal | 5.Estimate | 8. | |
| 3.Informed | 6.Reviewed | 9. | |
| Information Code | **5 Estimate** | | |
| 1.Owner | 4.Agent | 7. | |
| 2.Relative | 5.Estimate | 8. | |
| 3.Tenant | 6.Other | 9. | |

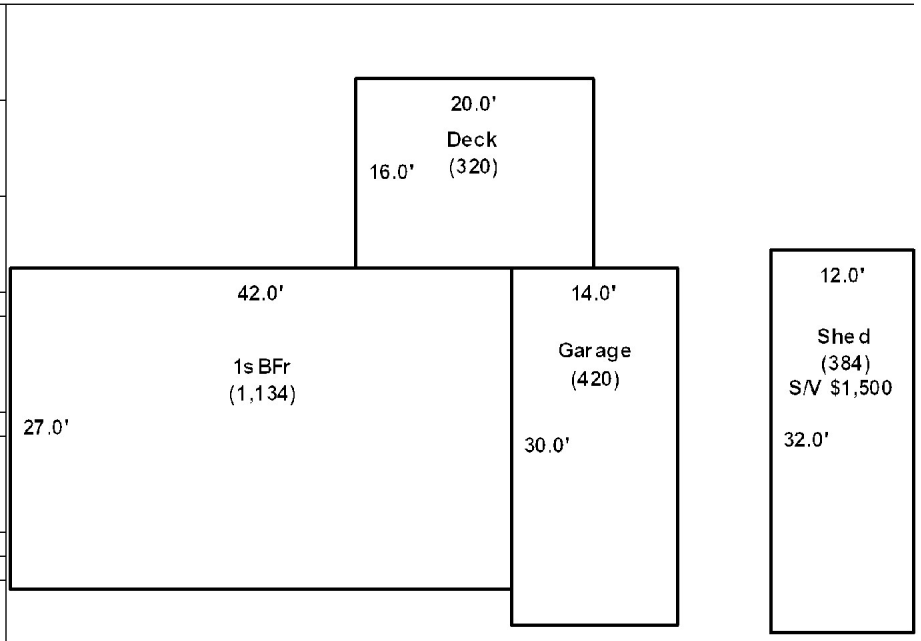


Date Inspected 9/02/2018

## Additions, Outbuildings & Improvements

| Type | Year | Units | Grade | Cond | Phys. | Funct. | Sound Value |
|---|---|---|---|---|---|---|---|
| 23 Frame Garage | 0 | 420 | 3 95 | 4 | 0 % | 100 % | |
| 24 Frame Shed | 0 | | | | % | % | 1,500 |
| 68 Wood Deck | 2010 | 320 | 0 0 | 0 | 0 % | 0 % | |
| | | | | | % | % | |
| | | | | | % | % | |
| | | | | | % | % | |
| | | | | | % | % | |
| | | | | | % | % | |
| | | | | | % | % | |
| | | | | | % | % | |

1.One Story Fram
2.Two Story Fram
3.Three Story Fr
4.1 & 1/2 Story
5.1 & 3/4 Story
6.2 & 1/2 Story
21.Open Frame Por
22.Encl Frame Por
23.Frame Garage
24.Frame Shed
25.Frame Bay Wind
26.1SFr Overhang
27.Unfin Basement
28.Unfinished Att
29.Finished Attic